(12) STANDARD PATENT (11) Application No. **AU 2013349651 B2**
(19) AUSTRALIAN PATENT OFFICE

(54) Title
Tubular joint

(51) International Patent Classification(s)
F16L 21/035 (2006.01) ***F16L 58/18*** (2006.01)
F16L 57/06 (2006.01)

(21) Application No: **2013349651** (22) Date of Filing: **2013.11.22**

(87) WIPO No: **WO14/079974**

(30) Priority Data

(31) Number	(32) Date	(33) Country
12 61137	**2012.11.22**	**FR**

(43) Publication Date: **2014.05.30**
(44) Accepted Journal Date: **2017.11.23**

(71) Applicant(s)
Saint-Gobain PAM

(72) Inventor(s)
Grasser, Johan;Genelot, Pierre;Grassi, Gabriel

(74) Agent / Attorney
Spruson & Ferguson, L 35 St Martins Tower 31 Market St, Sydney, NSW, 2000, AU

(56) Related Art
DE 10252981 A1
WO 9307411 A1

(12) DEMANDE INTERNATIONALE PUBLIÉE EN VERTU DU TRAITÉ DE COOPÉRATION EN MATIÈRE DE BREVETS (PCT)

(19) Organisation Mondiale de la Propriété Intellectuelle
Bureau international

(43) Date de la publication internationale
30 mai 2014 (30.05.2014)

WIPO | PCT

(10) Numéro de publication internationale
WO 2014/079974 A1

(51) Classification internationale des brevets :
F16L 21/035 (2006.01) *F16L 58/18* (2006.01)
F16L 57/06 (2006.01)

(21) Numéro de la demande internationale :
PCT/EP2013/074476

(22) Date de dépôt international :
22 novembre 2013 (22.11.2013)

(25) Langue de dépôt : français

(26) Langue de publication : français

(30) Données relatives à la priorité :
12 61137 22 novembre 2012 (22.11.2012) FR

(71) Déposant : **SAINT-GOBAIN PAM** [FR/FR]; 91, Avenue de la Libération, F-54000 Nancy (FR).

(72) Inventeurs : **GRASSER, Johan**; 44 rue Haute Seille, F-57000 Metz (FR). **GENELOT, Pierre**; 9 rue du Bois le Prêtre, F-54700 Norroy (FR). **GRASSI, Gabriel**; 8 allée des Cutiers, F-54700 Pont A Mousson (FR).

(74) Mandataires : **BLOT, Philippe** et al.; Cabinet Lavoix, 2, place d'Estienne d'Orves, F-75009 Paris (FR).

(81) États désignés *(sauf indication contraire, pour tout titre de protection nationale disponible)* : AE, AG, AL, AM, AO, AT, AU, AZ, BA, BB, BG, BH, BN, BR, BW, BY, BZ, CA, CH, CL, CN, CO, CR, CU, CZ, DE, DK, DM, DO, DZ, EC, EE, EG, ES, FI, GB, GD, GE, GH, GM, GT, HN, HR, HU, ID, IL, IN, IR, IS, JP, KE, KG, KN, KP, KR, KZ, LA, LC, LK, LR, LS, LT, LU, LY, MA, MD, ME, MG, MK, MN, MW, MX, MY, MZ, NA, NG, NI, NO, NZ, OM, PA, PE, PG, PH, PL, PT, QA, RO, RS, RU, RW, SA, SC, SD, SE, SG, SK, SL, SM, ST, SV, SY, TH, TJ, TM, TN, TR, TT, TZ, UA, UG, US, UZ, VC, VN, ZA, ZM, ZW.

(84) États désignés *(sauf indication contraire, pour tout titre de protection régionale disponible)* : ARIPO (BW, GH, GM, KE, LR, LS, MW, MZ, NA, RW, SD, SL, SZ, TZ, UG, ZM, ZW), eurasien (AM, AZ, BY, KG, KZ, RU, TJ, TM), européen (AL, AT, BE, BG, CH, CY, CZ, DE, DK, EE, ES, FI, FR, GB, GR, HR, HU, IE, IS, IT, LT, LU, LV, MC, MK, MT, NL, NO, PL, PT, RO, RS, SE, SI, SK, SM, TR), OAPI (BF, BJ, CF, CG, CI, CM, GA, GN, GQ, GW, KM, ML, MR, NE, SN, TD, TG).

Publiée :

— *avec rapport de recherche internationale (Art. 21(3))*

(54) **Title** : TUBULAR JOINT

(54) **Titre** : JONCTION TUBULAIRE

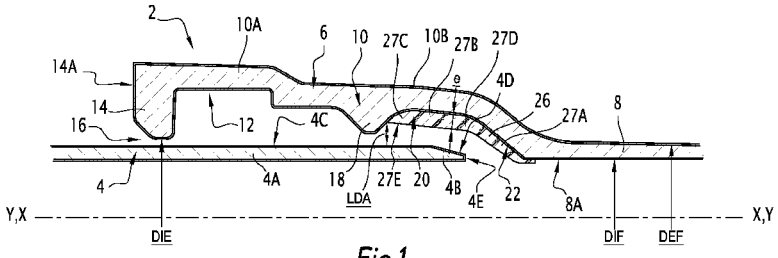

Fig.1

(57) **Abstract** : The invention relates to a tubular joint including a fitting end (6) connected to a shaft (8), and a spigot end (4) which is insertable into the fitting end (6) and which includes a common portion. The fitting end (6) includes a base body (10) provided with a fitting groove (12), a bottom groove (20), and a fitting bottom (22). The fitting end (6) includes a protection member (26) which is arranged on the fitting bottom (22) and which protects the fitting bottom from contact with the spigot end (4). The protection member (26) includes an axial bottom abutment (27A) and a skirt (27B). The skirt and the spigot end are suitable for allowing an angular deviation of the spigot end (4) relative to the fitting end (6) of at least 2° when the spigot end is in partial contact with the axial bottom abutment (7A).

(57) **Abrégé** : Cette jonction tubulaire comprend un bout à emboîtement (6) relié à un fût (8), et un bout uni (4) insérable dans le bout à emboîtement (6) et comprenant une portion courante. Le bout à emboîtement (6) comprend un corps de base (10) muni d'une gorge d'emboîtement (12), d'une gorge de fond (20) et d'un fond d'emboîtement (22). Le bout à emboîtement (6) comprend un organe de protection (26) disposé sur le fond d'emboîtement

[Suite sur la page suivante]

WO 2014/079974 A1

(22) et protégeant le fond d'emboîtement d'un contact avec le bout uni (4). L'organe de protection (26) comprend une butée axiale de fond (27A) et une jupe (27B). La jupe et le bout uni sont adaptés pour permettre une déviation angulaire du bout uni (4) par rapport au bout à emboîtement (6) qui est d'au moins 2° lorsque le bout uni est en contact partiel avec la butée axiale de fond (27A).

2013349651 28 May 2015

Tubular joint

The present invention relates to a tubular joint.

Tubular joints comprising a fitting end and an associated spigot end are known in the state of the art. When the spigot end is inserted into the fitting end, it is possible for the spigot end to collide with the fitting bottom and damage it. This is particularly problematic in the case where the fitting end and the spigot end are inwardly and outwardly provided with coatings, given that the coatings can be damaged at the contact zones, where the spigot end strikes the fitting bottom, thus favoring the beginning of corrosion.

To avoid this contact between the spigot end and the fitting bottom as much as possible, it is recommended not to insert the spigot end all the way into the fitting end and to thus leave an axial interstice between the spigot end and the fitting end. This interstice nevertheless favors the appearance of stagnant water between the spigot end and the fitting end, eventually causing dirt to be deposited in the interstice between the spigot end and the fitting bottom. This stagnant water and/or these dirt deposits then cause disruptions in the stream of water, which are detrimental to the proper flow of the conveyed water. It is desirable to propose a fitting end for a tubular joint that has an increased lifetime.

Object

It is the object of the present invention to substantially overcome or at least ameliorate at least one of the above disadvantages.

Summary

The present invention provides a tubular joint, of the type comprising

- a fitting end connected to a shaft and
- a spigot end that can be inserted into the fitting end and comprising a common portion,

the fitting end including a base body provided with a fitting groove, a bottom groove and a fitting bottom,

the fitting end further comprising a protection member positioned on the fitting bottom and protecting that fitting bottom from contact with the spigot end, wherein

the protection member comprises an axial bottom stop and a skirt, and wherein

- the skirt and the spigot end are suitable for allowing an angular deviation of the spigot end relative to the fitting end that is at least 2°, when the spigot end is in partial contact with the axial bottom stop.

2013349651 28 May 2015

According to specific embodiments of the invention, the fitting end may further optionally comprise one or more of the following features:

- the protection member is a protection ring;

- the protection member has a noncircular radial cross-section, and in particular a hollow first conical shape;

- the base body comprises a bottom groove and the protection member is positioned in the bottom groove;

- the protection member is made from a material having a Shore A hardness comprised between 40 and 80;

- the protection member is made from an elastomeric material, in particular an EPDM copolymer, an NBR copolymer, an SBR copolymer, chlorosulfonated polyethylene (CSM), a natural rubber or a thermoplastic elastomer, or a thermoplastic material, in particular PP, PE or amorphous PET;

- the base body comprises an inlet collar and the fitting bottom extends radially inward, and optionally outward, past the inlet collar;

- the base body comprises a core and a coating positioned at least on the fitting bottom.

The invention will be better understood upon reading the following description, provided solely as an example and done in reference to the appended drawings, in which:

- figure 1 is a sectional view of a first embodiment of a tubular joint according to the invention, the spigot end being in an intermediate position during the insertion of the spigot end into the fitting end;

- figure 2 is a view similar to that of figure 1, the spigot end being in an end-of-travel position relative to the fitting end and in contact with the protection member;

- figure 3 is a sectional view of a second embodiment of the tubular joint according to the invention, the tubular joint being in the aligned and fitted configuration;

- figure 4 is a sectional view of the second embodiment of the tubular joint according to the invention, the joint being in a deviated and fitted configuration;

- figure 5 is a sectional view of a third embodiment of the tubular joint according to the invention, which is an alternative of the joint of figures 3 and 4; and

- figure 6 is a sectional view of a fourth embodiment of the tubular joint according to the invention, which is an alternative of the joint of figure 7.

Figure 1 shows a tubular joint according to the invention, designated by general reference 2.

The tubular joint 2 comprises a spigot end 4 of a first pipe and a fitting end 6 of a second pipe. The spigot end 4 extends along a central axis X-X and the fitting end 6 extends along a central axis Y-Y. The tubular joint 2 has an aligned configuration in which the two central axes X-X and Y-Y coincide and form a central axis of the tubular joint. Below, the expressions "radially" and "axially" used in the context of an object refer to the central axis of that object. The tubular joint 2 also has a deviated configuration, in which the two central axes X-X and Y-Y form a non-zero angle between them.

The spigot end 4 comprises a common portion 4A and a beveled portion 4B. The common portion 4A has an outer spigot end surface 4C, which in the case at hand is cylindrical with a circular section. The beveled end 4B has a frustoconical surface 4D. The spigot end 4 ends with a front face 4E, which in the case at hand is annular.

The spigot end 4 can be inserted into the fitting end 6.

The fitting end 6 is connected to a shaft 8 and forms a pipe therewith. The shaft 8 is substantially cylindrical and has an inner diameter DIF and an outer diameter DEF. The

shaft 8 also extends concentrically around the central axis Y-Y. The shaft 8 has an inner surface 8A.

The fitting end 6 is provided with a base body 10. That base body 10 is connected in a single piece to the shaft 8.

The base body 10 comprises a core 10A and a coating 10B positioned on the core. The core 10A is made from metal, for example cast iron. The coating 10B is for example an anticorrosion coating, in particular zinc-based on the outer surface of the core 10A and epoxy- or zinc-based on the inner surface and the front surface of the core 10A. The shaft 8 comprises a core and a coating made from materials respectively identical to the materials of the core 10A and the coating 10B.

The spigot end 4 comprises a core made from a material identical to that of the core 10A and a coating positioned on that core. The coating of the spigot end 4 is for example an anticorrosion coating, in particular zinc-based on the outer surface of the core and epoxy-, zinc- or cement-based on the inner surface and the front surface of the core.

The base body 10 is provided with a fitting groove 12. The fitting end 6 comprises an inlet collar 14 defining an inlet opening 16 of the fitting end 6 in which the spigot end 4 is inserted. The inlet collar 14 has an inlet inner diameter DIE. The inlet collar 14 has a front inlet face 14A, which is the front face of the fitting end. Below, the term "proximal" means turned toward the inlet collar 14, and the term "distal" means turned opposite that inlet collar 14.

The fitting end 6 also comprises an intermediate rib 18. The fitting groove 12 is axially delimited by the inlet collar 14 and the intermediate rib 18.

The tubular junction 2 also comprises a sealing gasket, not shown in figures 1 and 2, which is positioned in the fitting groove 12 and presses against the spigot end 4 and the fitting end 6. In the case at hand, the sealing gasket is of the automatic type, i.e., the sealing is obtained automatically by radial compression of the seal between the spigot end 4 and the fitting end 6 during the insertion of the spigot end, without using a tightening flange to compress the sealing gasket.

The fitting end 6 also includes a bottom groove 20 and a fitting bottom 22. The bottom groove 20 has a maximum inner diameter DIG. The intermediate rib 18 separates the bottom groove 20 from the fitting groove 12. The fitting bottom 22 delimits the bottom groove on the axial side of the shaft 8.

The fitting bottom 22 extends radially inward past the inner inlet diameter DIE of the inlet collar 14 and up to the inner diameter of the shaft 8 DIF. The fitting bottom 22 also extends radially outward past the inner inlet diameter DIE and extends toward the bottom of the bottom groove 20. In the case at hand, the fitting bottom 22 is a

frustoconical surface widening toward the inlet collar 14. The incline of that frustoconical surface relative to the central axis Y-Y is for example comprised between 30° and 70°.

The fitting end 6 further comprises a protection member 26 that is positioned on the fitting bottom 22 and protects that fitting bottom 22 from contact with the spigot end 4.

In the case at hand, the protection member 26 is a protection ring extending around the central axis Y-Y of the fitting end 6. The protection member 26 has a noncircular cross-section. This cross-section is considered in a radial plane relative to the central axis Y-Y. In the case at hand, in the unbiased state, the protection member 26 has a hollow frustoconical shape and is positioned on the fitting bottom 22 as well as the bottom of the bottom groove 20.

The protection member 26 comprises an axial bottom stop 27A, positioned on the fitting bottom 22, and a skirt 27B positioned on the bottom of the bottom groove 20. The skirt 27B has a proximal end 27C, a distal end 27D and an inner skirt surface 27E. The proximal end 27C is positioned on the side of the intermediate rib 18, and the distal end 27D is positioned on the side of the shaft 8 and is adjacent to the axial bottom stop 27A.

In the fitted state of the spigot end 4 in the fitting end 6 and the aligned configuration of figure 2, the front face 4E of the spigot end presses over its entire perimeter against the axial bottom stop 27A. In this aligned configuration, the common portion 4A is completely out of contact with the protection member 26 and only the front face 4E and the beveled end 4D are in contact with the axial bottom stop 27A of the protection member, the spigot end 4 being completely out of contact with the skirt 27B.

The skirt 27B and the spigot end 4 are suitable for allowing an angular deviation of the spigot end 4 relative to the fitting end 6, when the spigot end 4 is in contact with part of the axial bottom stop 27A, which is at least 2°, preferably at least 3° and in particular at least 5°. In this deviated configuration, the spigot end 4 is partially in contact with the axial bottom stop 27A, and partially in contact or completely out of contact with the skirt 27B. In this state, the contact between the spigot end 4 and the protection member 26 is therefore established over all or part of the perimeter of the protection member 26.

In the aligned configuration of the tubular joint 2 and based on the diameters of the pipes, the inner surface 27E of the skirt 27B and the outer surface 4C of the spigot end are separated by a maximum radial distance LDA comprised between 0.8% and 3.5% of the maximum inner diameter DIG of the bottom groove 20. Depending on the diameters of the assembled pipes, this distance LDA is for example comprised between 3 mm and 20 mm, and preferably between 4.75 mm and 19.85 mm.

The skirt 27B has a thickness e measured perpendicular to the surfaces of the skirt 27B. The thickness e decreases from an axial side turned toward the inlet collar 14 toward an axial side turned toward the shaft 8.

The protection member 26 is pressed against the fitting bottom 22 and against the bottom of the bottom groove 20, its outer diameter being larger, at all points of contact, than the inner diameter of the fitting bottom 22 and the bottom of the bottom groove 20.

The protection member 26 also presses with its end turned toward the shaft 8 on the inner surface 8A of the shaft 8 over an axial distance of approximately 3 mm. In order to ensure the continuity of the conveyed stream of liquid, the portion of the protection member that covers the inner surface of the shaft 8 has a thickness not exceeding 1 mm.

The protection member 26 is made from plastic, in particular an elastomeric material such as an EPDM (ethylene-propylene-diene) copolymer, an NBR (acrylonitrile - butadiene) copolymer, an SBR (styrene - butadiene) copolymer, chlorosulfonated polyethylene, a natural rubber or a thermoplastic elastomer (TPE), or a thermoplastic material such as PP (polypropylene), PE (polyethylene) or amorphous PET (polyethylene terephthalate).

If the protection member 26 is an elastomer, it has a Shore A hardness comprised between 40 and 80.

The tubular joint 2 according to the invention operates as follows:

During assembly, the spigot end 4 is inserted into the fitting end 6 while crossing the inlet collar 14, and the insertion is continued toward the fitting bottom 22.

When the spigot end 4 reaches the fitting bottom 22, it presses against the protection member 26 and remains out of contact with the base body 10 at least at the protection member 26. This configuration is shown in figure 2.

In the assembled state, the spigot end 4 axially compresses the protection member 26. More specifically, the spigot end axially compresses the axial bottom stop 27A of the protection member. In this configuration, during the flow of liquid inside the tubular joint 2, the protection member 26 is deformed and fills in the axial interstice between the spigot end 4 and the fitting end 6, thus ensuring that the conveyed stream of liquid is respected.

On the one hand, the fitting end 6, comprising the protection member 26 according to the invention, prevents the deterioration of the fitting end 6 or the spigot end 4 during the insertion of the spigot end into the fitting end 6.

On the other hand, the protection member 26 ensures that the stream of liquid is respected and avoids stagnant liquids in the axial interstice between the spigot end 4 and the fitting end 6.

Figures 3 and 4 show a tubular joint 2 according to a second embodiment of the invention. This tubular joint differs from the tubular joint of figures 1 and 2 only as follows. Similar elements bear the same references.

The fitting bottom 22 extends perpendicular relative to the central axis Y-Y or is inclined at most by 3° relative to the axis Y-Y. The groove bottom 20 is frustoconical and is adjacent to the fitting bottom 22. The incline of the groove bottom 20 relative to the central axis Y-Y is comprised between 3° and 25°.

The skirt 27B has a thickness e that is substantially constant over the entire axial expanse of the skirt. The thickness e is also measured perpendicular to the surfaces of the skirt 27B.

In the aligned configuration shown in figure 3 and based on the diameters of the pipes, the maximal radial distance LDA is comprised between 0.9x and 3x the thickness e of the skirt.

The axial bottom stop 27A is formed by a stop rib 50, adjacent to the skirt 27B and defining a stop surface 52 turned toward the inlet of the fitting end. The stop rib 50 presses on the fitting bottom 22, in particular on the entire fitting bottom with a surface 54. The stop rib 50 has an axial width BLA.

The stop surface 52 extends perpendicularly relative to the central axis Y-Y or is inclined at most by 3° relative to the central axis Y-Y.

The stop rib 50 defines a free inner surface 56. The free inner surface is cylindrical with a circular section. The free inner surface 56 has an inner diameter substantially identical to the inner diameter DIF of the shaft 8, and preferably also substantially identical to the inner diameter of the spigot end 4. Thus, in the aligned configuration of figure 3, the tubular joint 2 forms a continuous inner surface with a same diameter extending from the spigot end 4 to the shaft 8.

The fitting end 6 defines a fitting depth PE, which is the distance between the front inlet face 14A of the fitting end 6 and the inlet of the shaft 8. The axial width BLA is advantageously comprised between 4% and 15% of the fitting depth PE.

In the aligned configuration of figure 3 and in the fitted state of the tubular joint 2, the front face 4E of the spigot end 4 is in contact with the stop surface 52 and the spigot end 4 is completely out of contact with the skirt 27B.

Figure 4 shows the tubular joint 2 of Figure 3 in a deviated and fitted configuration.

In this configuration, the front face 4E is in contact with the axial bottom stop 27A on a single side. The spigot end 4 is completely out of contact with the protection member 26 in all of the other locations of the protection member 26. However, in a maximal

deviated configuration that is not shown, the spigot end may also be partially in contact with the axial bottom stop 27A and partially in contact with the skirt 27B.

In the deviated configuration, the central axis Y-Y and the central axis X-X form an angle α between them. The angular deviation of the spigot end 4 relative to the fitting end 6 formed by that angle α is at least 2°, preferably at least 3° and in particular at least 5°.

Figure 5 shows a tubular joint 2 according to a third embodiment of the invention. This tubular joint differs from the tubular joint of Figures 3 and 4 only as follows. Similar elements bear the same references.

The bottom groove 20 has a proximal axial portion 60 inclined by a first angle β relative to the central axis Y-Y and a distal axial portion 62 inclined relative to the central axis Y-Y, by a second angle γ that is larger than the first angle β. Each of the proximal 60 and distal 62 axial portions is frustoconical.

Consequently, the protection member 26 has a beveled outer surface, complementary to the shape of the bottom groove 20.

Figure 6 shows the tubular joint according to a fourth embodiment. This tubular joint 2 differs from the tubular joint of Figure 5 only as follows. Similar elements bear the same references.

The protection member 26 comprises a baffle 70 extending radially toward the inside of the inner surface 8A of the shaft 8. The baffle 70 is suitable for disrupting the flow of the liquid flowing in the tubular joint in a flow direction EC. The mixing effect created by the baffle 70 then makes it possible, in certain cases, more particularly when the conveyed liquid is filled with abrasive particles, to minimize the abrasion of the pipes, in particular on the low generatrix.

In the case at hand, the baffle 70 comprises a first portion 72 suitable for disrupting the flow of the conveyed liquid, and which extends the stop rib 50 radially inward over the entire perimeter of the stop rib. This first portion 72 has an axial width identical to the width BLA of the stop rib 50 and forms a front baffle surface 74 that is inclined by more than 75° relative to the central axis Y-Y. The front baffle surface 74 is oriented toward the inlet of the fitting end 6 and therefore toward the upstream direction of the fluid flowing in the tubular joint 2.

The first portion 72 has a radial thickness ERC that is at least 2 mm.

The baffle 70 further comprises a second portion 76 suitable for protecting the portion of the shaft 8 situated directly downstream from the baffle. That second portion 76 is related to the first portion 72 and extends axially on the side opposite the front surface 74. The second portion covers part of the inner surface 8A of the shaft 8. The second

portion 76 has an axial width that is at least 1 time the axial width of the stop rib 50. The second portion 76 has a shape widening toward the side opposite the front surface 74.

The features of one embodiment may be applied to the other embodiments.

The embodiment of figures 1 and 2 is more particularly suitable for sanitation pipes conveying wastewater, while the embodiments of figures 3 to 6 are more particularly suitable for pipes conveying abrasive fluids, for example water filled with abrasive solid particles.

2013349651 28 May 2015

CLAIMS

1. A tubular joint, of the type comprising

- a fitting end connected to a shaft and

- a spigot end that can be inserted into the fitting end and comprising a common portion,

the fitting end including a base body provided with a fitting groove, a bottom groove and a fitting bottom,

the fitting end further comprising a protection member positioned on the fitting bottom and protecting that fitting bottom from contact with the spigot end, wherein

the protection member comprises an axial bottom stop and a skirt, and wherein

- the skirt and the spigot end are suitable for allowing an angular deviation of the spigot end relative to the fitting end that is at least 2°, when the spigot end is in partial contact with the axial bottom stop.

2. The tubular joint according to claim 1, wherein:

- the spigot end comprises an outer spigot end surface,

- the skirt comprises an inner skirt surface, and

- the maximal radial distance LDA between the inner skirt surface and the outer spigot end surface is comprised between 0.8% and 3.5% of the maximum inner diameter DIG of the bottom groove when the spigot end and the fitting end are aligned.

3. The tubular joint according to claim 2, wherein the maximal radial distance LDA is comprised between 3 mm and 20 mm.

4. The tubular joint according to any one of claims 1 to 3, wherein the skirt has a thickness e, and wherein the maximal radial distance LDA is comprised between 0.9x and 3x the thickness e.

5. The tubular joint according to any one of claims 1 to 4, wherein the protection member is a protection ring.

6. The tubular joint according to any one of claims 1 to 5, wherein the protection member also presses with its end turned toward the shaft on an inner surface of the shaft over an axial distance of 3 mm.

2013349651 28 May 2015

7. The tubular joint according to any one of the preceding claims, wherein the axial bottom stop is formed by a stop rib, adjacent to the skirt and defining a stop surface turned toward the inlet for the spigot end, the stop rib having an axial width BLA.

8. The tubular joint according to claim 7, wherein the fitting end defines a fitting depth PE, which is the axial distance between a front face of the fitting end and the inlet of the shaft, and wherein the ratio of the axial width BLA to the fitting depth (PE) is comprised between 0.04 and 0.15.

9. The tubular joint according to claim 7 or 8, wherein the protection member comprises a baffle extending radially inside an inner surface of the shaft.

10. The tubular joint according to claim 9, wherein the baffle comprises a first portion that extends the stop rib radially inward and extends over the entire perimeter of the stop rib, the first portion forming a front baffle surface that is inclined by more than 75° relative to the central axis of the fitting end or which is perpendicular to the central axis of the fitting end.

11. The tubular joint according to claim 9 or 10, wherein the baffle comprises a second portion extending axially opposite the front baffle surface and over the inner surface of the shaft.

12. The tubular joint according to any one of the preceding claims, wherein the protection member is made from a material having a Shore A hardness comprised between 40 and 80 and/or the protection member is made from an elastomeric material, or a thermoplastic material.

13. The tubular joint according to any one of the preceding claims, wherein the base body comprises an inlet collar and the fitting bottom extends radially inward, past the inlet collar.

14. The tubular joint according to any one of the preceding claims, wherein the base body comprises a core and a coating positioned at least on the fitting bottom.

2013349651 28 May 2015

15. The tubular joint according to claim 1, wherein the skirt and the spigot end are suitable for allowing an angular deviation of the spigot end relative to the fitting end that is at least 3°.

16. The tubular joint according to claim 1, wherein the skirt and the spigot end are suitable for allowing an angular deviation of the spigot end relative to the fitting end that is at least 5°.

17. The tubular joint according to claim 3, wherein the maximal radial distance LDA is comprised between 4.75 mm and 19.85 mm.

18. The tubular joint according to claim 6, wherein the portion of the protection member that covers the inner surface of the shaft has a thickness not exceeding 1 mm.

19. The tubular joint according to claim 12, wherein the elastomeric material is an EPDM copolymer, an NBR copolymer, an SBR copolymer, chlorosulfonated polyethylene, a natural rubber or a thermoplastic elastomer.

20. The tubular joint according to claim 12, wherein the thermoplastic material is PP, PE or amorphous PET.

21. The tubular joint according to claim 13, wherein the fitting bottom also extends radially outward past the inlet collar.

Saint-Gobain Pam

Patent Attorneys for the Applicant/Nominated Person

SPRUSON & FERGUSON

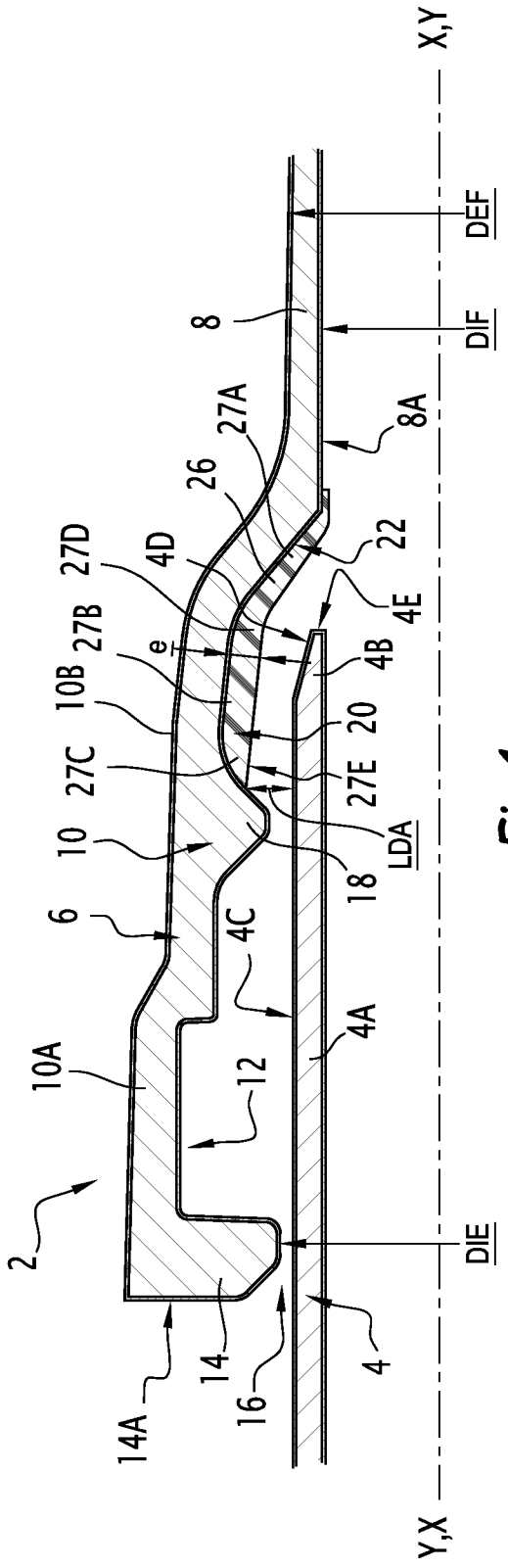
X,Y
Y,X
DEF
DIF
DIE
LDA
2
6
8
8A
10
10A
10B
12
14
14A
16
18
20
22
26
27A
27B
27C
27D
27E
4
4A
4B
4C
4D
4E
e

Fig.1

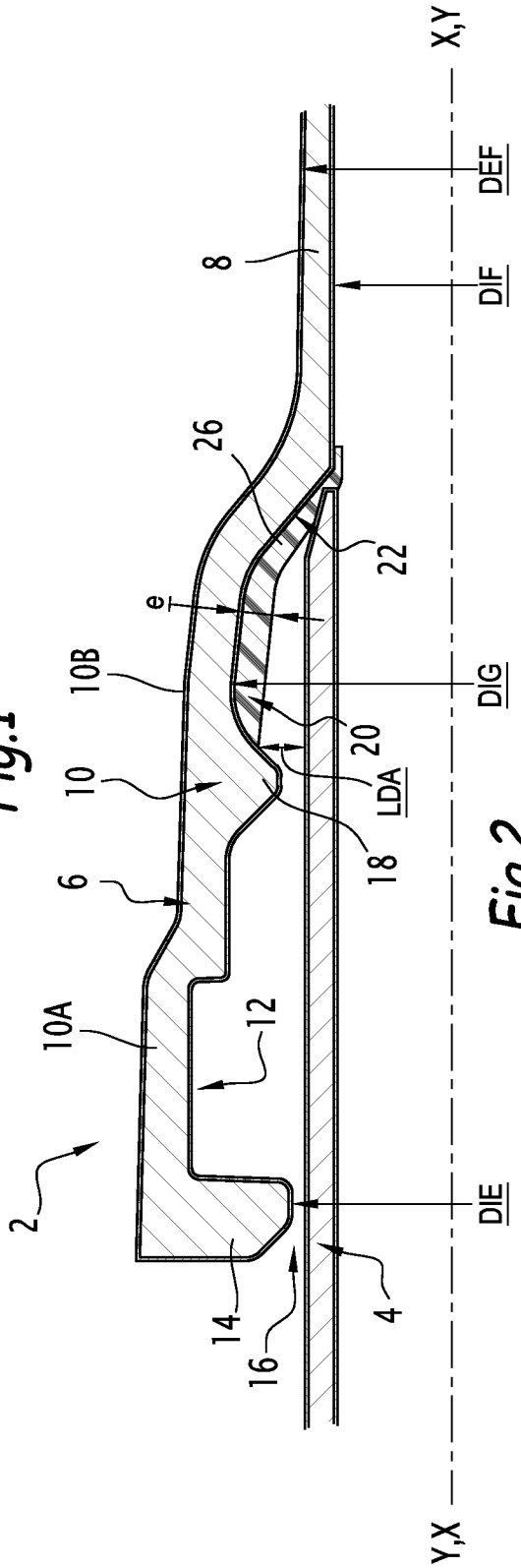
X,Y
Y,X
DEF
DIF
DIG
DIE
LDA
2
6
8
10
10A
10B
12
14
16
18
20
22
26
4
e

Fig.2

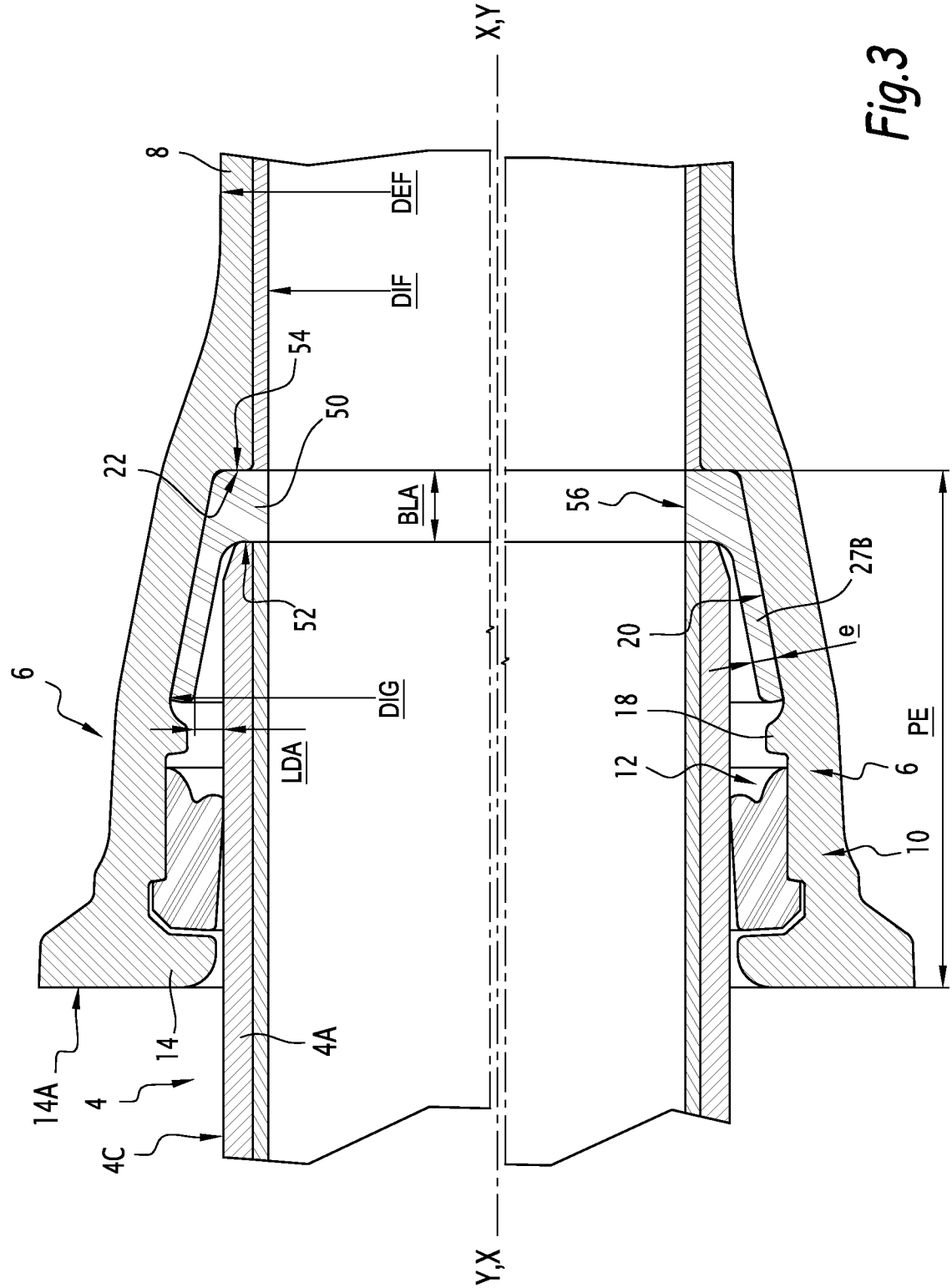
X,Y
Y,X
8
DEF
DIF
54
50
22
BLA
56
27B
20
e
52
6
DIG
18
PE
LDA
12
6
10
14
4A
14A
4
4C

Fig.3

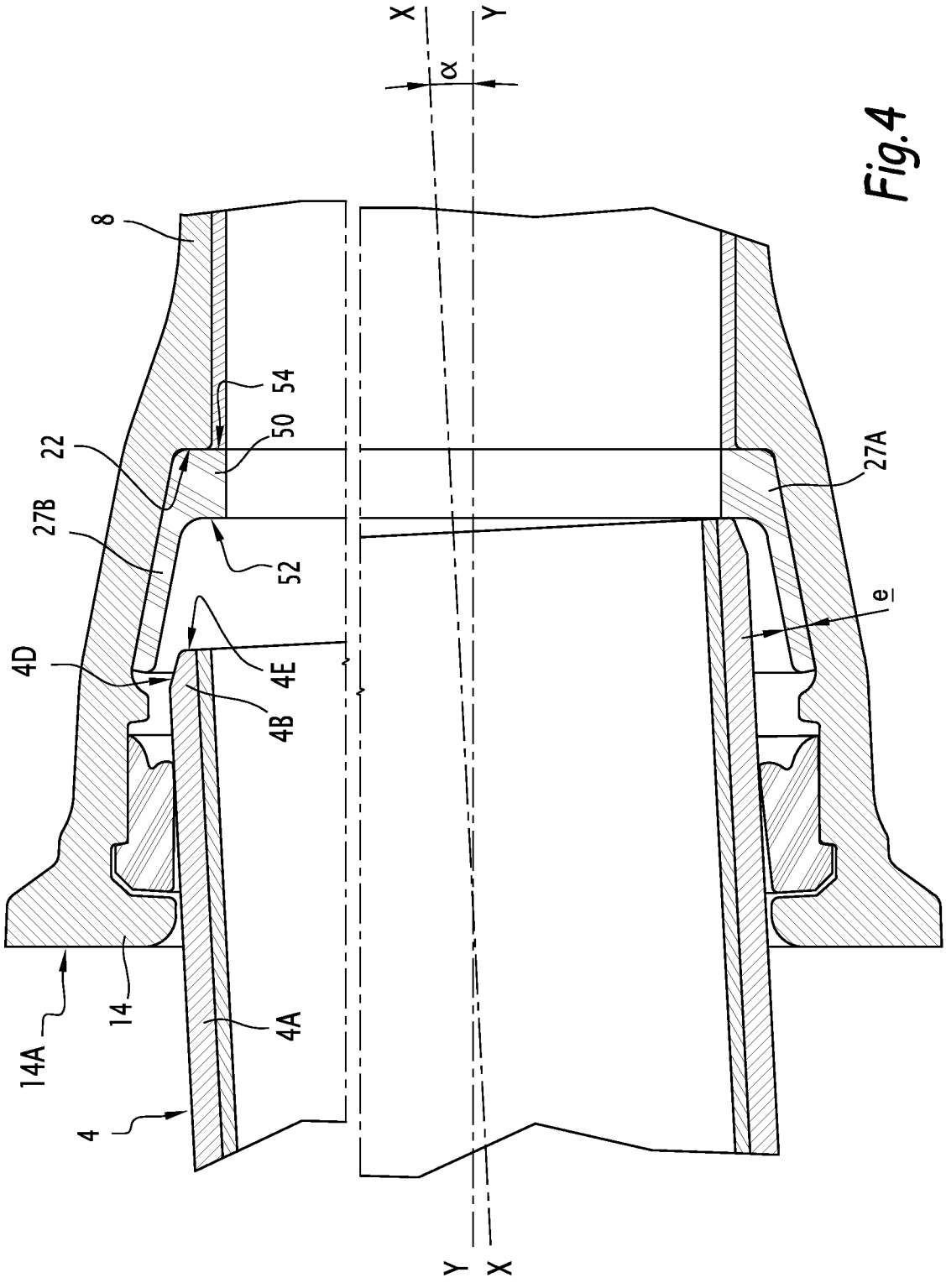

Fig.4

Fig.5

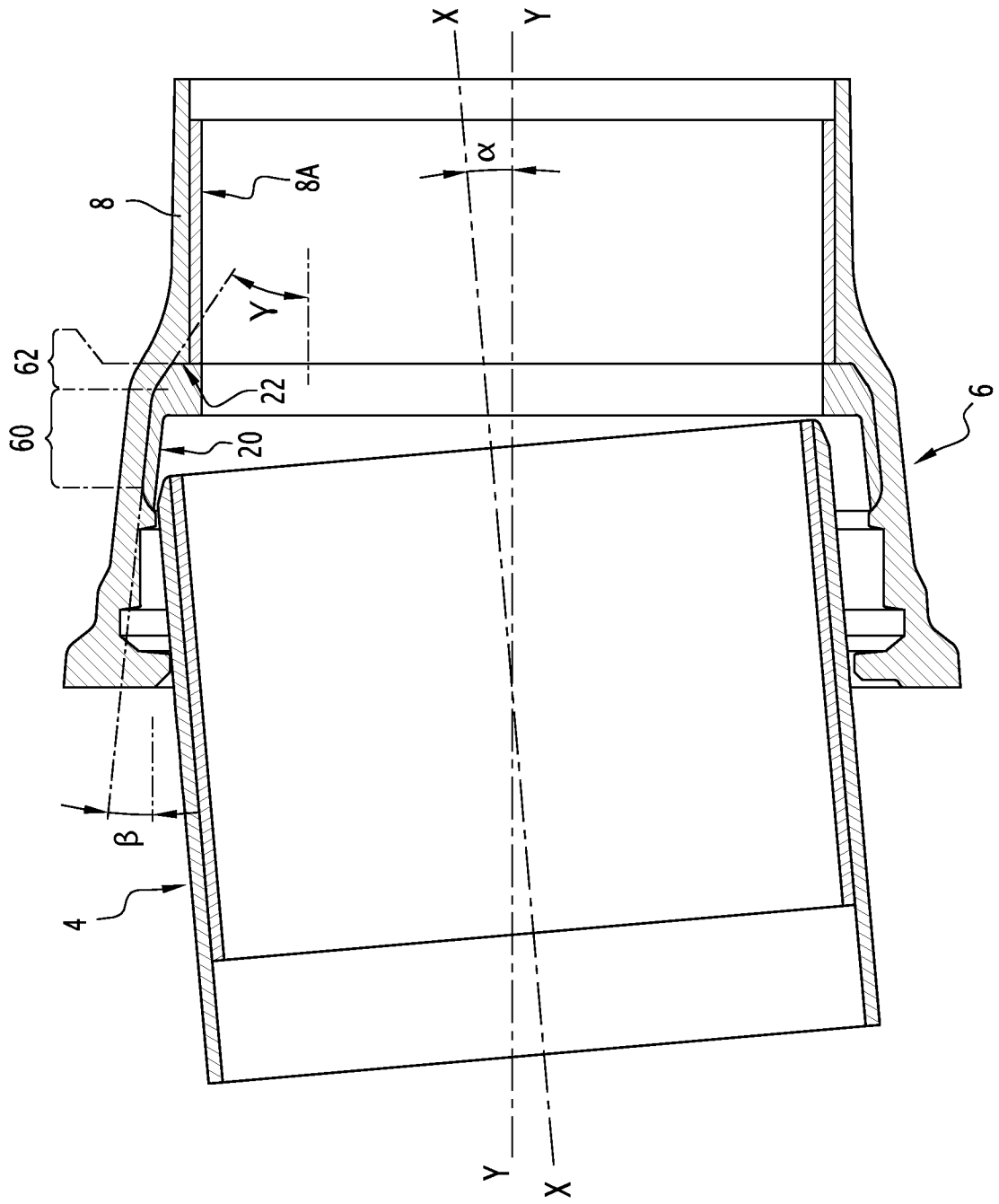

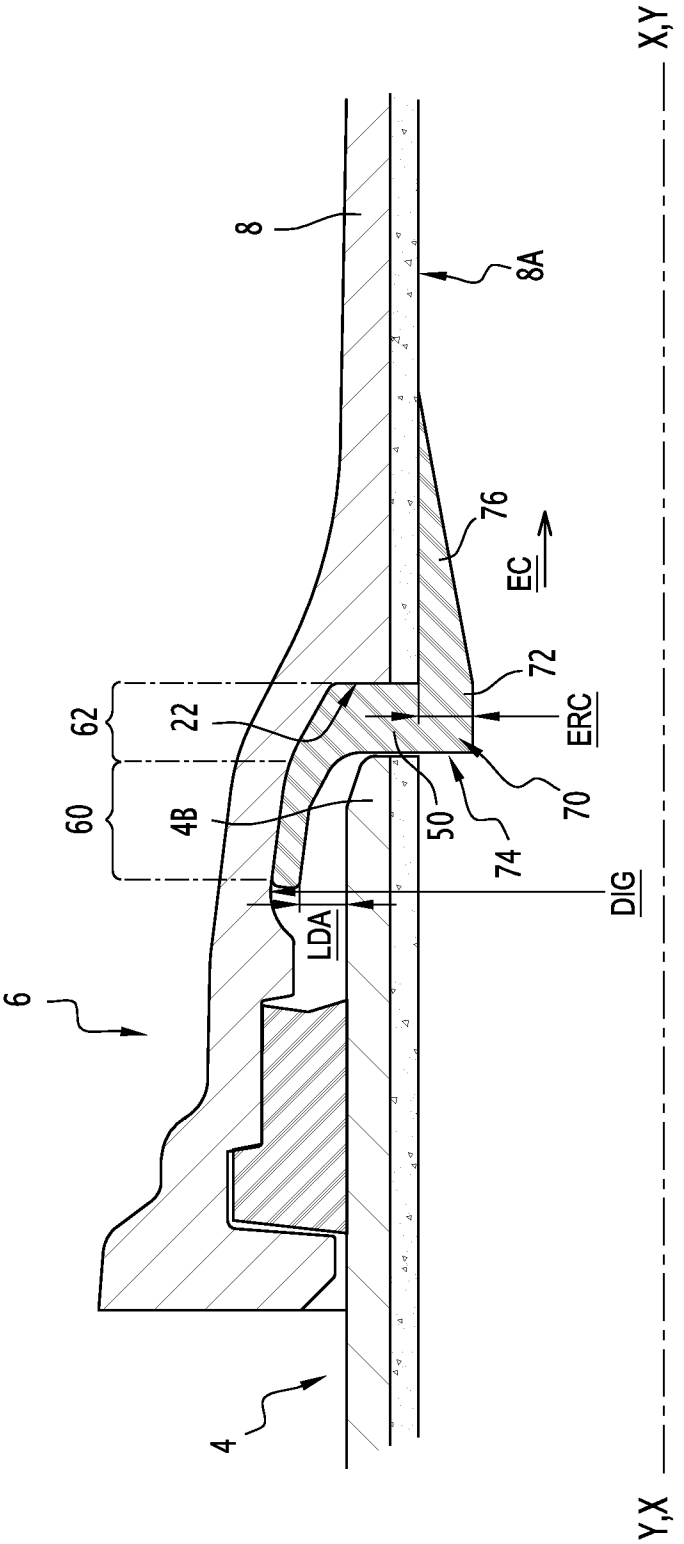

Fig.6