April 14, 1970 R. W. YANCEY 3,506,295

SHOCK ABSORBER BUMPER

Filed Oct. 14, 1968

Fig. 1

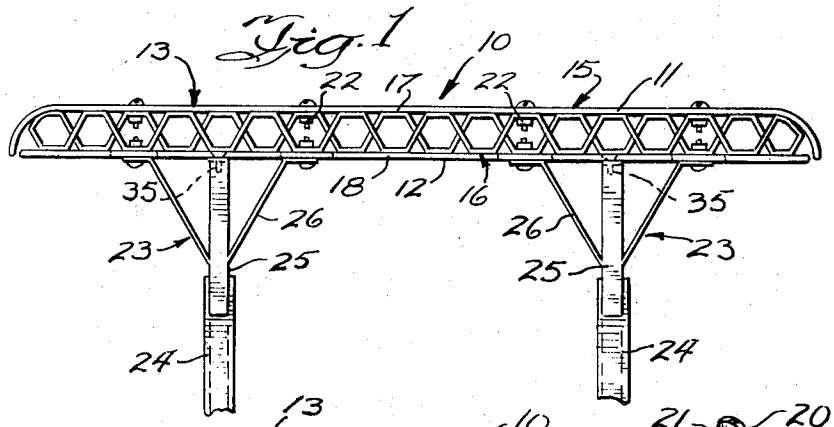

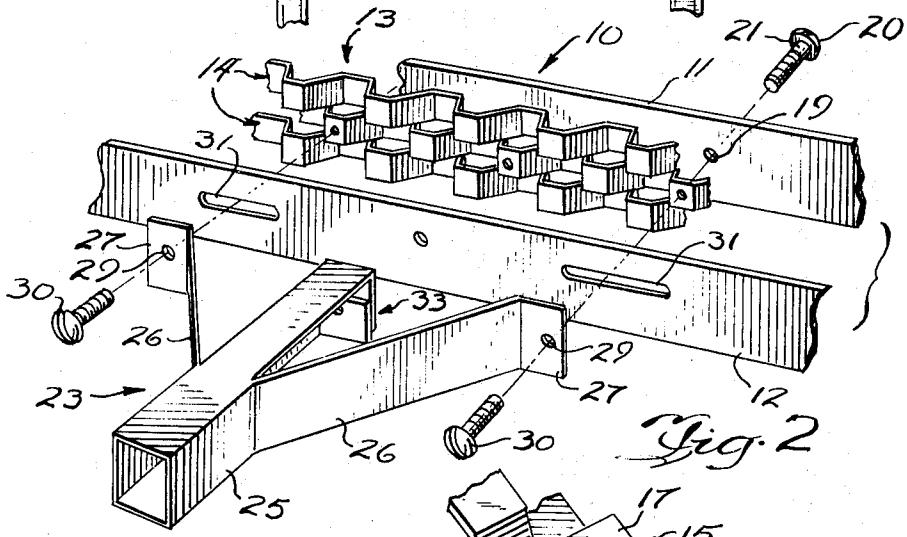

Fig. 2

Fig. 4

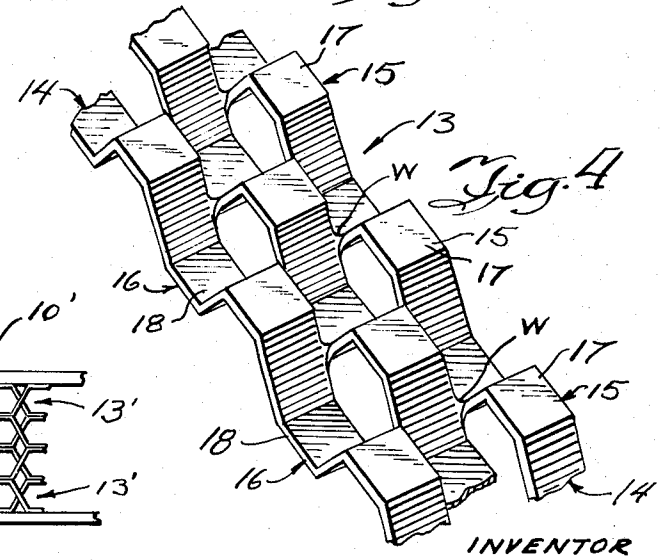

Fig. 3

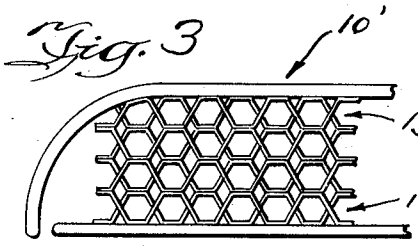

INVENTOR

Raymond W. Yancey

BY Dressler, Goldsmith, Clement & Gordon

ATTORNEYS

United States Patent Office 3,506,295
Patented Apr. 14, 1970

3,506,295

SHOCK ABSORBER BUMPER

Raymond W. Yancey, Libertyville, Ill., assignor to MSL Industries, Inc., a corporation of Minnesota

Filed Oct. 14, 1968, Ser. No. 767,304
Int. Cl. B60r *19/04;* B61f *19/04*
U.S. Cl. 293—70 10 Claims

ABSTRACT OF THE DISCLOSURE

A bumper having impact absorbing characteristics, with the bumper including a sheet that is deformed to include spaced parallel ribbons having longitudinally spaced, alternating crests and troughs that are interconnected by webs having a multi-planar torsional deformation. The impact absorbing sheet is preferably sandwiched between inner and outer members, with the impact absorbing sheet being connected to the inner member by means which allow the sheet to expand longitudinally during impact, and with the outer member being connected to the impact absorbing member by means that will readily shear during impact.

BACKGROUND OF THE INVENTION

Bumpers which are in common use today on automotive vehicles are essentially decorative items, and do not satisfactorily protect the vehicle structure adjacent the bumpers. Such bumpers have little or no impact absorbing properties, so that when the bumper strikes another object, the forces are directly transmitted to the vehicle body. Furthermore, known bumpers are easily dented and are difficult and expensive to replace when necessary.

SUMMARY OF THE INVENTION

The bumper of the present invention includes a novel impact absorbing member that is formed from an initial sheet having a pluarilty of transverse rows of longitudinally aligned openings that divide the sheet into a plurality of spaced parallel ribbons, with webs between the openings interconnecting the ribbons. The openings are relatively wide in comparison to the thickness of the sheet, and the ribbons of the sheet are deformed to provide alternating, longitudinally spaced crests and troughs that extend a substantial distance out of the plane of the sheet, with the webs having a multi-planar torsional deformation. When the initial sheet is deformed to provide the crests and troughs, and the twisted webs, the overall length of the sheet is significantly reduced, on the order of 25%, so that when the deformed sheet is impacted, the sheet will expand to its initial length before the sheet material itself is strained. In this manner, the sheet can absorb an impact and dissipate the energy thereof without transmitting the force of the impact to the vehicle structure.

The impact absorbing member is preferably provided in a sandwich structure between inner and outer members, with the inner member having means accommodating elongation of the impact absorbing member, and with the outer member being connected to the impact absorbing member with means that will readily shear during impact.

BRIEF DESCRIPTION OF THE DRAWINGS

FIG. 1 is a top plan view of a first embodiment of the bumper;

FIG. 2 is an enlarged exploded perspective view of the bumper of FIG. 1;

FIG. 3 is an enlarged perspective view of the impact absorbing sheet material; and

FIG. 4 is a fragmentary top plan view of a modified bumper structure.

DESCRIPTION OF THE PREFERRED EMBODIMENTS

While this invention is susceptible of embodiment in many different forms, there is shown in the drawings and will herein be described in detail a preferred embodiment of the invention and a modification thereof, with the understanding that the present disclosure is to be considered as an exemplification of the principles of the invention and is not intended to limit the invention to the embodiments illustrated.

Referring now to the drawings in detail, a first embodiment of the bumper is illustrated at **10** in FIG. 1, and includes an impact absorbing sheet **13** sandwiched between an outer member **11** and an inner member **12**. The member **13** is formed from a generally planar sheet of material having a plurality of transverse rows of elongate openings therein that separate the member **13** into a plurality of spaced, parallel ribbons **14**, three such ribbons being illustrated in the embodiment of FIGS. 1–3. The webs between the openings connect the ribbons **14** at spaced positions therealong, and each of the ribbons **14** is deformed in accordance with the teachings in my concurrently filed application entitled "Article of Manufacture and Method of Making the Same" to provide alternating, longitudinally spaced crests **15** between the webs and troughs **16**. As is explained in detail in my above-mentioned application, the crests **15** and troughs **16** are defined by converging ribbon portions, and during the ribbon deforming step, the webs W are given a multi-planar torsional deformation so that they are generally uniformly twisted between their oppositely inclined end portions. The apexes **17** of the crests **15** are flattened and parallel with the plane of the initial sheet, with the apexes **18** of the troughs **16** also being flattened and parallel with the plane of the initial sheet. As is evident from FIG. 1, crest apexes **17** are positioned in face abutting engagement with outer member **11**, while trough apexes **18** are positioned in face abutting engagement with inner member **12**.

The impact absorbing member **13** is secured to outer member **11** by shear bolt-type fasteners **20**, which pass through openings **19** in the member **11**, and through openings in the crest apexes **17**. Nuts **22** are threaded on fasteners **20** to positively secure the member **13** to the member **11**, and fasteners **20** preferably are weakened, as by a circumferential groove **21**, to provide a means allowing the fasteners to readily shear when the member **13** expands during impact.

Means **23** is provided for mounting the bumper **10** upon tubular vehicle chassis supports **24**, and mounting means **23** are defined by rectangular tubular mounting brackets **25** having outwardly diverging sides **26** that terminate in mounting feet **27**. Mounting feet **27** are positioned in face abutting engagement with the outer surface of inner member **12**, and mounting feet **27** include openings **29** that are positionable in alignment with elongate slots **31** in the inner member **12**. Fasteners **30** impale openings **29**, slots **31**, and openings in the trough apexes **18**, with nuts **32** being threaded upon the inner ends of fasteners **30** to secure the brackets **25** and the inner member **12** to the impact resisting member **13**. Fasteners **30** are freely slidable along slots **31**, so that when the member **13** expands during impact, the members **11** and **13** are free to move relative to inner member **12**. The top and bottom of brackets **25** may be bent toward one another, as is shown at **33** in FIG. 2, with flush fasteners **35** extending through openings in the trough apexes **18** and through openings in the folded over bracket portions.

A modified bumper structure is shown at **10'** in FIG. 4, and the bumper **10'** is similar to the bumper **10**, except that a plurality of impact absorbing members **13'** are

provided, with the apexes of the adjacent crests and troughs being secured to one another.

While both of the above-described embodiments have been illustrated in connection with an outer member **10** or **10'**, the present invention contemplates that in certain instances the outer member may be eliminated to enhance the aesthetic appearance of the bumper.

What is claimed is:

1. A bumper comprising: an impact absorbing sheet having at least two vertically spaced rows of openings, a horizontally extending ribbon portion being provided on each side of the rows of openings and the openings in each row being separated by a web portion, each ribbon including alternating, longitudinally spaced crests and troughs, the crests extending outwardly from a vertical reference plane and the troughs extending inwardly from the reference plane, the transitional portion of each ribbon between the crests and troughs extending at an angle with respect to the reference plane, the crests on each ribbon being aligned with a trough on an adjacent ribbon whereby the aligned transitional portions of adjacent ribbons are disposed at angles that are inclined oppositely with respect to said reference plane, said webs each having a first end portion merging with a transitional portion of one ribbon and a second end portion merging with the aligned transitional portion of an adjacent ribbon, the intermediate portion of each web between its end portions being twisted throughout its length; and means for mounting said sheet upon a vehicle.

2. A bumper as set forth in claim **1** wherein said sheet includes three horizontally extending ribbons.

3. A bumper as set forth in claim **1** wherein a plurality of impact absorbing sheets are secured to one another, with the crests on each sheet being positioned in engagement with a trough on an adjacent sheet.

4. A bumper as set forth in claim **1** wherein said mounting means is defined by an inner member secured to at least two of said troughs, and mounting brackets secured to said inner member and having means connectable with a vehicle.

5. A bumper as set forth in claim **4** wherein said inner member and brackets have cooperating means allowing said sheet to expand longitudinally upon impact.

6. A bumper as set forth in claim **5** wherein said cooperating means are defined by slots in said inner member, and fasteners passing through said slots and openings in said brackets.

7. A bumper as set forth in claim **1** including an outer member, and means securing said outer member to at least some of said crests.

8. A bumper as set forth in claim **7** wherein said securing means includes a plurality of fasteners, said fasteners being weakened so as to shear when said sheet expands upon impact.

9. A bumper as set forth in claim **8** wherein said mounting means is defined by an inner member secured to at least two of said troughs, and mounting brackets secured to said inner member and having means connectable with a vehicle.

10. A bumper as set forth in claim **9** wherein said inner member and brackets have cooperating means allowing said sheet to expand longitudinally upon impact.

References Cited

UNITED STATES PATENTS

1,957,515	5/1934	Williams	293—89
3,146,014	8/1964	Kroell	293—70
3,265,163	8/1966	Gilbert et al.	188—1
3,412,628	11/1968	DeGain	293—1

FOREIGN PATENTS

446,174	6/1927	Germany.

DRAYTON E. HOFFMAN, Primary Examiner

H. BELTRAN, Assistant Examiner

U.S. Cl. X.R.

188—1; 293—87, 92, 98, 99