E. L. POLLARD, DEC'D.
M. M. POLLARD, ADMINISTRATRIX.
TRACK GAGE.
APPLICATION FILED DEC. 27, 1912.

1,190,796.

Patented July 11, 1916.

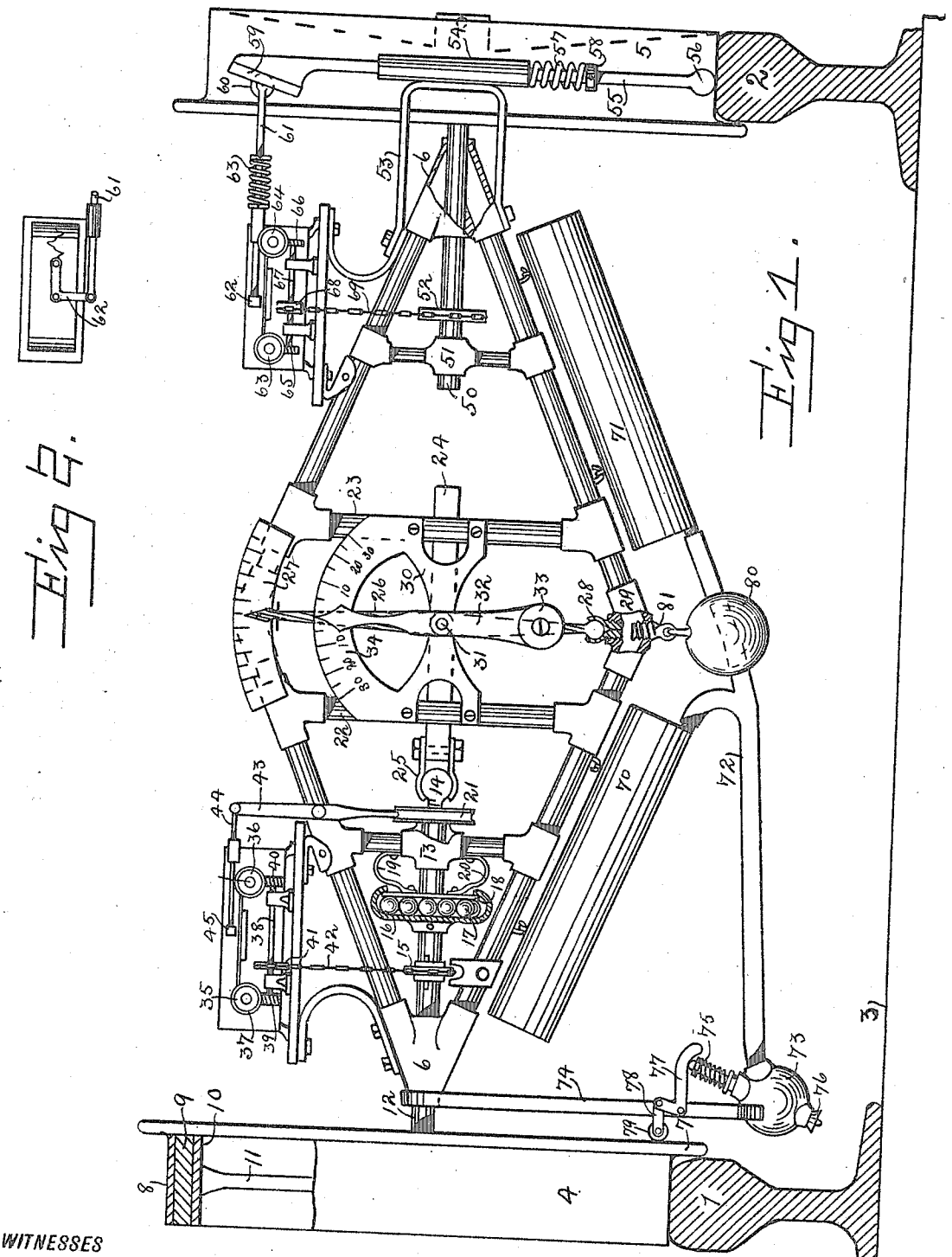

WITNESSES

G. E. Steinfte
Eugene Gaxe

INVENTOR
Effingham L. Pollard, dec'd
by Marion Morton Pollard, Administratrix
BY
Arthur Phelps Marr
ATTORNEY

UNITED STATES PATENT OFFICE.

EFFINGHAM LAWRENCE POLLARD, DECEASED, LATE OF DOBBS FERRY, NEW YORK, BY MARION M. POLLARD, ADMINISTRATRIX, OF DOBBS FERRY, NEW YORK.

TRACK-GAGE.

1,190,796. Specification of Letters Patent. Patented July 11, 1916.

Application filed December 27, 1912. Serial No. 738,795.

To all whom it may concern:

Be it known that EFFINGHAM L. POLLARD, late a citizen of the United States, and resident of the town of Dobbs Ferry, county of Westchester, State of New York, whose post-office address was Chauncey, New York, invented certain new and useful Improvements in Track-Gages, of which the following is a specification.

This device, a track gage containing many important improvements, is capable of performing with a high degree of satisfaction all of the duties that will ever be required of it and many more than have in the past been considered the functions of a track gage.

It has provided means for registering and recording the distance between the rails, means for indicating the angle of each curve or the slant, normal or abnormal of each foot of track, and the relative height of each length of rail to the rails immediately adjacent, as well as much other data that is extremely desirable in the perfect installation and satisfactory upkeep of the road bed and rails.

In constructing this device the inventor endeavored to keep it of light weight so that it might be easily handled by one man, handled in such a way that the adjustment of the recording instruments would at no time be disturbed, and he so proportioned his parts that the single operator who pushes or pulls the device along upon the rails may, without difficulty, observe the numerous records that are being made or indicated.

The features of the construction and important features will be described in the specification which follows.

The following is what he considered the best means of carrying out this invention.

The accompanying drawings form a part of this specification, in which:

Figure 1 shows in elevation a complete device resting upon the rails. Fig. 2 shows in plan one of the recording devices.

Similar reference numerals indicate like parts in all the figures where they appear.

At 1, is indicated one of the rails of the track, the left hand rail and at 2, the right hand rail. These rails are parallel and are connected by means of the tie 3, all in the ordinary manner. A wheel 4, mounted upon the rail 1, and a wheel 5 mounted upon the rail 2 support the device between them. These wheels are not in fixed relation to each other but are arranged so that one may reciprocate in an axial alinement with the other. The wheel 4 is the free or reciprocating wheel and later will be described the means for obtaining the reciprocation.

The frame that supports the indicating and recording means is constructed of pipe which may be ordinary gas pipe. The walls of this pipe may be thin and as they are not called upon to withstand great strains, in his experiments the inventor used bicycle tubing, a hard steel tubing large in diameter but of small gage. The frame itself is of diamond shape and at each outwardly extending point is provided a branching member 6, which is provided with a central perforation producing a bearing for the shaft passing therethrough. The remaining parts are described in rotation commencing with the left and continuing to the right side of the device.

The wheel 4 is provided with a flange 7. This wheel is formed of an exterior peripheral steel rim 8 a wooden felly 9 arranged within the rim 8, and a second rim 10 secured within the felly 9. The spokes 11 extend from the hub to be secured upon or into the rim 10. The wheel 4 is secured upon a shaft 12, which in turn passes through the central perforation in the branching member 6 and after passing through a second bearing member 13 terminates in a ball 14. Upon this shaft is mounted a sprocket 15, which is feathered to the shaft 12. Adjacent to the sprocket 15 and upon the shaft 12 is secured a ball casing 16 containing a series of balls 17, and operable therewith, surrounding the shaft though not connected thereto, is a disk 18 bearing against the balls and completing a ball bearing. Secured to this disk 18 are spring members 19 and 20, which may be bowed springs, the inner ends of which are secured to the supports for the bearing member 13. These springs acting with the ball bearing serve to force the shaft 12 outward to its greatest possible extent. A grooved wheel 21 secured to the shaft 12 is arranged adjacent to the ball 14 and may or may not be in bearing with the member 13. The functions of this wheel will be described later.

Arranged one on each side of the longitudinal center of the diamond shaped frame

are provided cross-bars 22 and 23 that are formed integral with and become a part of the frame, and at mid-length of these bars are arranged bearings for a square shaft 24. The left end of this shaft is provided with a shell 25 that coöperates with the ball 14 to make a ball and socket joint. At mid-length the shaft 24 a long pointer 26 is pivotally engaged which extends upward and is arranged upon the face of a scale 27. The lower end of this pointer 26 is held in a socket 28, screw-threaded in the angle member 29, which is incorporated into the diamond shaped frame forming a part thereof. Secured to the uprights 22 and 23 is a bridge 30 provided with a pin 31, upon which is pivotally suspended a second pointer 32. The lower end of this pointer is provided with a weight 33, and the upper end lies upon, or adjacent to, the face of a scale 34, which may be formed integral with the bridge 30. This pointer 32 may sometimes be termed a plumb, for as it hangs freely upon the pin 31, it will retain a vertical position and will indicate upon the properly marked scale 34, the tilt of the angle frame and the parts operable therewith.

It will be seen from this construction that the wheel 4 is intended to be free to follow the spread of the rails, and it will be seen that the pointer 26 will indicate this spread upon the scale 27, but it is usually desirable to obtain a permanent record of the distances between the two rails over a certain section of track or even the whole system. To obtain this permanent record a recording mechanism is provided comprising a roller 35 upon which a quantity of paper may be wound and a second roller 36 adapted to receive the paper 35. Each of these rollers is provided with a cut-gear 37, and a shaft 38 arranged adjacent thereto carries a worm 39, and a second worm 40 for rotating the rollers 35 and 36 in either direction. A sprocket 41 secured upon the shaft 38 receives a chain 42 which passes around the sprocket 15 and by the rotation of the shaft 12 drives the shaft 38 rotating the rollers 35 and 36. A lever 43 pivoted to the frame, has its lower end operable in the grooved wheel 21, the upper end of this lever connecting with the link 44, which through the bell crank 45 operates the stylus, the bell crank 45 being of a construction similar to the bell crank 62 shown in Fig. 2.

In line with the shaft 12 though not connected therewith is a second shaft 50 supported by a bearing 51 and a second branching member 6. Secured to this shaft is the wheel 5, one of the traction wheels, and a sprocket 52. A bracket 53 secured to a convenient portion of the frame supports a vertical tube 54 and operable through this tube is a member 55, the lower end of which is provided with a ball or roller 56. A spring 57 exerts a slight downward pressure on a collar 58 which is secured to the member 55, and insures that the ball or roller 56 will be in constant yet easy contact with the track. The upper end of the member 55 is provided with an angle block or shoe 59, and operable upon the angular face of this block is a wheel 60 mounted upon the rod 61 which, through a bell crank 62, operates a stylus. A spring 63 upon the rod 61 causes the wheel 60 to remain in constant contact with the shoe 59.

The bell crank 62 operates a stylus over the paper of an additional recording means. This recording means indicates the high and low rails, corrugated rails, or high and low spots in the rails, and consists of rollers 63 and 64 operated by means of worm wheels 65 and 66, and the shaft 67. Secured upon this shaft 67 is a sprocket 68, and a chain 69 connects this sprocket with the sprocket 52 mounted upon the shaft 50.

It is sometimes desirable to indicate upon the track or road bed the condition of the rails or the location of badly spread or imperfect rails. For this purpose tubular reservoirs 70 and 71 are suspended from the under side of the frame work. These reservoirs are connected by means of the branching tube 72. This tube terminates in a valve 73, which is supported by means of a bracket 74. The valve is spring operated and is provided with a plunger 75 extending quite through the body of the valve and terminating in a cone shaped closure 76. A bell crank 77 connected to a pin 78 operates the plunger 75, and this pin 78 which may be provided with a roller 79 bears against the flange 7 of the wheel 4. The body of this valve may serve as a secondary reservoir, so that a quantity of a suitable marking fluid may be held closely adjacent to the rails ready to be discharged as soon as the valve is open.

It is desirable that this whole device shall be retained in an upright position and that the pointers 26 and 32 may be vertical, a weight or ball 80 is flexibly suspended in a plug 81, which is in turn screw-threaded into the fitting 29.

This completes the detailed description of the parts and it is believed from the foregoing the operation of the device may be readily understood.

Modifications may be made within the scope of the appended claims without departing from the principle or sacrificing the advantages of this invention.

The inventor found it desirable to construct his device with wheels electrically insulated from each other so that when this gage is placed upon a track it will not short circuit and thus operate the ordinary signal-

ing systems with which most tracks are provided, but this feature may be omitted. The recording devices may also be omitted, the operator depending entirely upon his observation for his record, but he preferred the whole as shown.

Having carefully and fully described the invention what applicant claims and desires to secure by Letters Patent is:—

1. A track having a frame and a plurality of traction wheels, a vertically reciprocating means supported by said frame and partly arranged in the line of travel of one of said wheels for indicating and recording the relative height of the rails as herein specified.

2. A track gage having a frame and a plurality of traction wheels, a vertically reciprocating means supported by said frame and partly arranged in the line of travel of one of said wheels and having its uppermost end provided with angularly disposed ways, and a horizontal arm and stylus operated thereby for recording the relative height of the rails as herein specified.

3. A device of the character described comprising a plurality of traction wheels in axial alinement, shafts in said wheel a frame supported by said shafts and means for urging one of said shafts away from the center of said frame in combination with a valve controlled chamber having a valve lever resting upon one of said wheels and adapted to operate said valve upon the movement of said shaft as and for the purpose set forth.

4. A device of the character described comprising a plurality of traction wheels in axial alinement, shafts in said wheels, a frame supported by said shafts and means for retaining said frame in a normally vertical position, a spring operated anti-friction device for urging one of said shafts away from the center of said frame, a plurality of tanks carried by said frame, a valve controlled chamber connected to said tanks and a valve lever resting upon one of said wheels and adapted to operate the said valve upon the movement of the said spring operated shaft as and for the purpose set forth.

Signed at New York city, in the county of New York, and State of New York this 7th day of December, 1912.

MARION M. POLLARD,
Administratrix of the Estate of Effingham Lawrence Pollard.

Witnesses:
G. E. STERRITTE,
ARTHUR PHELPS MARR.