OPIC
Office de la propriété intellectuelle du Canada

CIPO
Canadian Intellectual Property Office

(12) (19) (CA) **Demande-Application**

(21) (A1) **2,317,069**
(22) 2000/08/29
(43) 2001/03/01

(72) DHULER, VIJAYAKUMAR R., US
(72) WALTERS, MARK DAVID, US
(71) JDS UNIPHASE INC., CA

(51) Int.Cl.[7] B81B 3/00, B81C 1/00, B81B 5/00
(30) 1999/09/01 (09/388,321) US

(54) **ROBINET MICROELECTROMECANIQUE COMPRENANT DES COMPOSANTS MONOCRISTALLINS ET METHODE DE FABRICATION CONNEXE**

(54) **MICROELECTROMECHANICAL VALVE HAVING SINGLE CRYSTALLINE COMPONENTS AND ASSOCIATED FABRICATION METHOD**

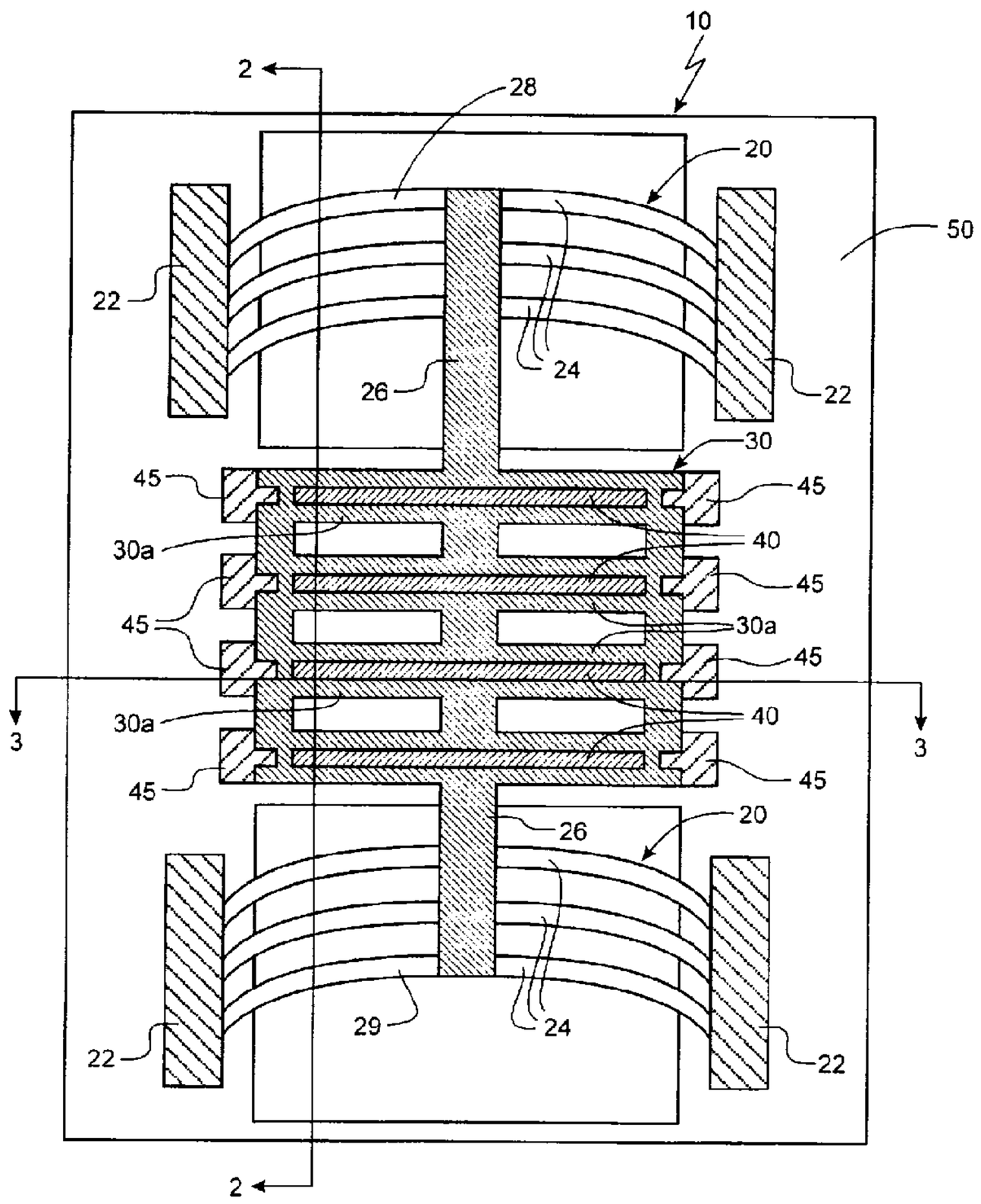

(57) A microelectromechanical (MEMS) device is provided that includes a microelectronic substrate and a thermally actuated microactuator and associated components disposed on the substrate and formed as a unitary structure from a single crystalline material, wherein the associated components are actuated by the microactuator upon thermal actuation thereof. For example, the MEMS device may be a valve. As such, the valve may include at

OPIC
Office de la propriété intellectuelle du Canada

CIPO
Canadian Intellectual Property Office

(21) (A1) **2,317,069**
(22) 2000/08/29
(43) 2001/03/01

least one valve plate that is controllably brought into engagement with at least one valve opening in the microelectronic substrate by selective actuation of the microactuator. While the MEMS device can include various microactuators, the microactuator advantageously includes a pair of spaced apart supports disposed on the substrate and at least one arched beam extending therebetween. By heating the at least one arched beam of the microactuator, the arched beams will further arch such that the microactuator moves between a closed position in which the valve plate sealingly engages the valve opening and an open position in which the valve plate is at least partly disengaged from and does not seal the valve opening. The microactuator may further include metallization traces on distal portions of the arched beams to constrain the thermally actuated regions of arched beams to medial portions thereof. The valve may also include a latch for maintaining the valve plate in a desired position without requiring continuous energy input to the microactuator. An advantageous method for fabricating a MEMS valve having unitary structure single crystalline components is also provided.

MICROELECTROMECHANICAL VALVE HAVING SINGLE CRYSTALLINE COMPONENTS AND ASSOCIATED FABRICATION METHOD

ABSTRACT OF THE DISCLOSURE

A microelectromechanical (MEMS) device is provided that includes a microelectronic substrate and a thermally actuated microactuator and associated components disposed on the substrate and formed as a unitary structure from a single crystalline material, wherein the associated components are actuated by the microactuator upon thermal actuation thereof. For example, the MEMS device may be a valve. As such, the valve may include at least one valve plate that is controllably brought into engagement with at least one valve opening in the microelectronic substrate by selective actuation of the microactuator. While the MEMS device can include various microactuators, the microactuator advantageously includes a pair of spaced apart supports disposed on the substrate and at least one arched beam extending therebetween. By heating the at least one arched beam of the microactuator, the arched beams will further arch such that the microactuator moves between a closed position in which the valve plate sealingly engages the valve opening and an open position in which the valve plate is at least partly disengaged from and does not seal the valve opening. The microactuator may further include metallization traces on distal portions of the arched beams to constrain the thermally actuated regions of arched beams to medial portions thereof. The valve may also include a latch for maintaining the valve plate in a desired position without requiring continuous energy input to the microactuator. An advantageous method for fabricating a MEMS valve having unitary structure single crystalline components is also provided.

Doc. No. CRO-33 CA Patent

MICROELECTROMECHANICAL VALVE HAVING SINGLE CRYSTALLINE COMPONENTS AND ASSOCIATED FABRICATION METHOD

FIELD OF THE INVENTION

The present invention relates to microelectromechanical devices and associated fabrication methods and, more particularly, to microelectromechanical valves having single crystalline components and an associated fabrication method.

BACKGROUND OF THE INVENTION

Microelectromechanical structures (MEMS) and other microengineered devices are presently being developed for a wide variety of applications in view of the size, cost and reliability advantages provided by these devices. Many different varieties of MEMS devices have been created, including microgears, micromotors, and other micromachined devices that are capable of motion or applying force. These MEMS devices can be employed in a variety of applications including hydraulic applications in which MEMS pumps or valves are utilized, optical applications which include MEMS light valves and shutters, and electrical applications which include MEMS relays.

MEMS devices have relied upon various techniques to provide the force necessary to cause the desired motion within these microstructures. For example, controlled thermal expansion of an actuator or other MEMS component has been used to actuate MEMS devices. See, for example, U.S. Patent No. 5,909,078 and U.S. Patent Application Serial Nos. 08/936,598 and 08/965,277, all assigned to MCNC, also the assignee of the present invention, which describe MEMS devices having thermally actuated microactuators, the contents of which are incorporated herein by reference.

An example of a thermally actuated microactuator for a MEMS device comprises one or more arched beams extending between a pair of spaced apart supports. Thermal actuation of the microactuator causes further arching of the arched beams which results in useable mechanical force and displacement. The arched beams are generally formed from nickel using a high aspect ratio lithography technique which produces arched beams with aspect ratios up to 5:1. Although formed with high aspect ratio lithography, the actual nickel arched beams have rather modest aspect ratios and may therefore have less

out-of-plane stiffness and be less robust than desired in some instances. Further, the lithography technique used to form nickel arched beams may result in the arched beams being spaced fairly far apart, thereby increasing the power required to heat the arched beams by limiting the amount that adjacent arched beams heat one another. In addition, the resulting microactuator may have a larger footprint than desired as a result of the spacing of the arched beams. Thus, there exists a need for arched beams having higher aspect ratios in order to increase the out-of-plane stiffness and the robustness of microactuators for MEMS devices. In addition, there is a desire for microactuators having more closely spaced arched beams to enable more efficient heating and a reduced size.

Nickel microactuators are typically heated indirectly, such as via a polysilicon heater disposed adjacent and underneath the actuator, since direct heating of the nickel structure (such as by passing a current therethrough) is inefficient due to the low resistivity of nickel. However, indirect heating of the microactuator of a MEMS device results in inefficiencies since not all heat is transferred to the microactuator due to the necessary spacing between the microactuator and the heater which causes some of the heat generated by the heater to be lost to the surroundings.

Nickel does have a relatively large coefficient of thermal expansion that facilitates expansion of the arched beams. However, significant energy must still be supplied to generate the heat necessary to cause the desired arching of the nickel arched beams due to the density thereof. As such, although MEMS devices having microactuators with nickel arched beams provide a significant advance over prior actuation techniques, it would still be desirable to develop MEMS devices having microactuators that could be thermally actuated in a more efficient manner in order to limit the requisite input power requirements.

Thermally actuated MEMS valve structures having nickel arched beam actuators typically also have valve plates comprised of nickel. Since the limited aspect ratios attainable with nickel results in structures similarly limited in out-of-plane stiffness and robustness, MEMS valves having nickel valve plates are generally restricted to lower pressure fluid systems in order for the valve to operate with acceptable sealing. While out-of-plane stops for the valve plates may be helpful in increasing the pressure

capabilities of a MEMS valve, stops are typically difficult to construct using conventional semiconductor processing techniques for MEMS valves having nickel valve plates. Thus, there exists a further need for more robust MEMS valves with valve plates having increased out-of-plane stiffness and thus for application in higher pressure fluid systems. In addition, it would be desirable for the valve construction to facilitate the formation of out-of-plane stops using conventional semiconductor processing techniques, wherein the stops would contribute to the stability and sealing ability of the valve plate.

SUMMARY OF THE INVENTION

The above and other needs are met by the present invention which, in one embodiment, provides a microelectromechanical (MEMS) valve comprising a microelectronic substrate defining at least one opening therethrough, a thermally actuated microactuator disposed thereon and comprised of a single crystalline material, such as silicon, and at least one valve plate comprised of a single crystalline material and having at least one valve seat. The valve plate is operably engaged with the microactuator and adapted to move the valve seat between a disengaged open position and an engaged closed position with respect to the corresponding opening in the microelectronic substrate. More particularly, thermal actuation of the microactuator causes the valve seat to be engaged and/or disengaged with the opening in the substrate as a result of the operable contact between the valve plate and the microactuator.

The microactuator preferably comprises a pair of spaced apart supports disposed on the substrate and at least one arched beam extending therebetween. The microactuator may also include an actuator member that is operably coupled to the at least one arched beam and which extends outwardly therefrom. The microactuator further includes means for heating the at least one arched beam to cause further arching such that the actuator member moves the valve plate between a closed position and an open position with respect to the opening in the substrate. In a closed position, the valve plate is positioned with the valve seat adjacent to the opening in the microelectronic substrate such that the valve seat engages and seals the opening. In an open position, the valve seat is at least partially disengaged from the opening such that the opening is not sealed. Accordingly, the MEMS valve of the present invention may be provided in a normally-closed or a

normally-open configuration. Further, the MEMS valve may comprise at least one mechanical stop disposed adjacent the valve plate for providing an out-of-plane restraint for the valve plate, as well as facilitating alignment thereof, with respect to the substrate. In addition, the MEMS valve may also comprise at least one latch disposed on the substrate and capable of interacting with the valve plate, following a predetermined displacement thereof due to thermal actuation of the microactuator, such that the valve plate may be restrained in a predetermined position with respect to the opening without requiring continuous actuation of the microactuator. In some embodiments, the latch may be, for example, thermally actuated or electrostatically actuated.

As will be apparent, each arched beam of the microactuator is comprised of a semiconductor material and has opposed distal portions proximate the respective supports and a medial portion extending between the distal portions. According to one preferred embodiment, a metal layer is disposed on the distal portions of the arched beam, leaving the medial portion of the arched beam substantially free of the metal. Accordingly, an electrical current passing between the supports preferentially heats the medial portion of the arched beam and causes further arching thereof.

Another aspect of the present invention comprises the associated method to form a microelectromechanical valve having single crystalline components. According to one preferred method, a microelectronic substrate is initially formed that defines at least one opening therethrough comprising the valve opening. A first wafer comprised of a single crystalline material then has at least one valve seat formed thereon, either from the same single crystalline material or another suitable material, before being bonded upon a surface of the substrate such that the valve seat is adjacent the substrate. Thereafter, the first wafer is polished to a desired thickness. At least one mechanical stop is then formed adjacent the valve plate for providing an out-of-plane restraint for the valve plate, as well as facilitating alignment thereof, with respect to the substrate. At least one thermally actuated microactuator and at least one valve plate are then formed from the first wafer such that portions of the microactuator and the valve plate are moveable relative to the microelectronic substrate and such that the microactuator is operably engaged with the valve plate. In some embodiments, the microactuator and the valve plate may be at least partially formed from the first wafer prior to the first wafer being bonded to the substrate.

Accordingly, thermal actuation of the microactuator causes the microactuator to move the valve plate, and thus the valve seat, between an open position and a closed position with respect to the opening defined by the microelectronic substrate to thereby form the valve. Further, at least one latch may also be formed on the substrate that is capable of interacting with the valve plate, following a predetermined displacement thereof due to thermal actuation of the microactuator, such that the valve plate may be restrained in a predetermined position with respect to the opening.

Thus, a MEMS valve can be formed in accordance with the present invention that includes arched beams and valve plates formed of a single crystalline silicon. Fabricating the arched beams and the valve plates from single crystalline silicon allows these components to be formed with aspect ratios of up to at least 10:1, particularly by using a deep reactive ion etching process. The higher aspect ratios of the arched beams and the valve plates increases their out-of-plane stiffness and constructs a more robust device having greater strength and stiffness. For example, a higher aspect ratio valve plate may accordingly allow operation of a MEMS valve in a higher pressure fluid system. The fabrication techniques of the present invention also permits the arched beams and other components to be more closely spaced. The closer spacing between adjacent silicon arched beams, for example, results in more effective transfer of heat between adjacent arched beams. In addition, the single crystalline silicon microactuator can be directly heated, such as by passing a current therethrough. As will be apparent, direct heating of the microactuator is generally more efficient than indirect heating. Further, although the coefficient of thermal expansion of silicon is less than that of metals, such as nickel, silicon is significantly less dense than nickel such that for a given amount of power, a silicon arched beam can generally be heated more, and therefore arch more, than a corresponding nickel arched beam. Therefore, the MEMS valve of the present invention can have greater out-of-plane stiffness, can be more robust, and the thermally actuated microactuators thereof can be more efficiently and controllably heated than conventional MEMS microactuators having metallic arched beams.

BRIEF DESCRIPTION OF THE DRAWINGS

Some of the advantages of the present invention having been stated, others will appear as the description proceeds, when considered in conjunction with the accompanying drawings, which are not necessarily drawn to scale, in which:

FIG. 1 is a plan view of a representative MEMS valve in accordance with one embodiment of the present invention.

FIGS. 2A – 2J are cross-sectional views taken along line 2-2 in **FIG. 1** illustrating a sequence of operations performed during the fabrication of a MEMS valve according to an embodiment of the present invention.

FIGS. 3A – 3D are cross-sectional views taken along line 3-3 in **FIG. 1** illustrating a sequence of operations performed during the fabrication of a MEMS valve according to an embodiment of the present invention.

FIGS. 4A – 4C are plan and cross-sectional views illustrating a MEMS valve employing a protective cover over the MEMS actuator according to another embodiment of the present invention.

FIG. 5 is a plan view of a MEMS actuator according to still another embodiment of the present invention.

FIG. 6 is a plan view of a preferred embodiment of a MEMS valve according to the present invention and including a thermal latch.

DETAILED DESCRIPTION OF THE INVENTION

The present invention now will be described more fully hereinafter with reference to the accompanying drawings, in which preferred embodiments of the invention are shown. This invention may, however, be embodied in many different forms and should not be construed as limited to the embodiments set forth herein; rather, these embodiments are provided so that this disclosure will be thorough and complete, and will fully convey the scope of the invention to those skilled in the art. Like numbers refer to like elements throughout.

FIG. 1 discloses an embodiment of a MEMS device and, in particular, a valve, indicated generally by the numeral **10**, which includes the features of the present invention. The valve **10** generally comprises at least one microactuator **20** and at least

one valve plate **30** for engaging corresponding valve openings **40** defined by an adjacent microelectronic substrate **50**. While the microelectronic substrate **50** can be formed of a variety of materials, the substrate **50** preferably comprises a wafer of a microelectronic material, such as single crystalline silicon. Although the microactuator **20** can have various forms, the microactuator **20** of one advantageous embodiment includes a pair of spaced apart supports **22** affixed to the substrate **50** and at least one and, more preferably, a number of arched beams **24** extending between the spaced apart supports **22**.

According to the present invention, the supports **22**, the arched beams **24**, and the at least one valve plate **30** are preferably formed of a single crystalline material, such as single crystal silicon, and, more preferably, as a unitary structure formed from the same single crystalline silicon wafer.

According to one advantageous aspect of the present invention, the arched beams **24** are comprised of single crystalline silicon which has a relatively low coefficient of thermal expansion of 2.5×10^{-6} / °K, which is about one-fifth that of nickel. Surprisingly, however, silicon arched beams generally require less energy to be heated to the same temperature compared to nickel arched beams of the same size and shape. The reduction in energy required to heat the silicon arched beams results, in part, from the density of silicon of 2.33 g/cm^3 that is only about one-fourth that of nickel. In addition, silicon arched beams can be directly heated, thus providing more efficient heating than the indirect heating typically used for nickel arched beams.

Another advantage of silicon arched beams **24** is that a high aspect ratio lithography process (which currently limits the aspect ratio of nickel arched beams to 5:1) is not required. Instead, a deep reactive ion etching process is used in the formation of silicon arched beams, wherein this etching process can routinely produce aspect ratios of 10:1. The high aspect ratios for silicon arched beams increases the out-of-plane stiffness of the arched beams and contributes to more robust devices such as, for example, valves capable of operating at relatively higher pressures. In addition, the deep reactive ion etching process permits the arched beams to be more closely spaced than nickel arched beams, thus increasing the energy efficiency of the microactuator **20** due to improved heat transfer between adjacent silicon arched beams. For example, the silicon arched beams of the MEMS valve **10** of the present invention having an aspect ratio of 10:1 can

have a center-to-center spacing of 10μm and a gap between adjacent arched beams of 5μm. For the foregoing reasons, a microactuator having silicon arched beams is therefore much more efficiently heated than conventional microactuators with nickel arched beams since the beams may be placed in closer proximity to adjacent beams. For instance, in one embodiment, a 40% reduction in the energy required to heat the silicon arched beams is obtained by reducing the configuration of silicon arched beams having a 10:1 aspect ratio from a center-to-center spacing of 22 μm with a 12 μm gap between adjacent arched beams to a center-to-center spacing of 10 μm with a 5μm gap between adjacent arched beams.

The microactuator **20** also includes means for heating the arched beams **24**. In one embodiment of the present invention, the microactuator **20** is thermally actuated by direct heating of the arched beams **24**. For example, a potential difference can be applied between electrodes disposed upon the spaced apart supports **22** which causes a current to flow through the arched beams **24**. The resistivity of the arched beams **24** causes heat to be produced in the arched beams **24** due to the current, thereby providing the necessary thermal actuation. Alternatively, the arched beams **24** can be indirectly heated to produce the thermal actuation of the microactuator **20** such as, for example, by a change in the ambient temperature about the arched beams **24** or by an external polysilicon heater disposed adjacent thereto. As shown in **FIG. 1**, the arched beams **24** are arched in a direction which preferably extends parallel to the substrate **50** in the desired or predetermined direction of motion of the microactuator **20**. Thus, heating of the arched beams **24** causes further arching thereof in the predetermined direction, thereby resulting in useable displacement and mechanical force.

The microactuator **20** may also include a lengthwise extending actuator member **26** coupled to the arched beams **24** and extending outwardly therefrom. The actuator member **26** therefore serves as a coupler to mechanically couple a plurality of arched beams **24** between the spaced apart supports **22** as shown in **FIG. 1**. As such, further arching of the arched beams **24** in the predetermined direction displaces the actuator member **26** in the same predetermined direction. By mechanically coupling multiple arched beams **24** with the actuator member **26**, the resulting microactuator **20** provides a higher degree of controlled displacement and force than would be provided by a single arched beam.

As further shown in **FIG. 1**, the at least one microactuator **20** of the present invention is preferably designed such that at least one valve plate **30** is operably engaged with the at least one microactuator **20**, such as through actuator member **26**, and actuated thereby. As also shown, the at least one microactuator **20** can include, for example, two microactuators **28** and **29** wherein one microactuator **28** is disposed on one side of the valve plate **30** and extends in a predetermined direction away from the valve plate **30** (in a "pull" configuration), while the other microactuator **29** is disposed on the opposite side of the valve plate **30** and extends in the same predetermined direction toward the valve plate **30** (in a "push" configuration). Both microactuators **28** and **29** thereby cooperate to control the displacement of the valve plate **30**. Although the valve plate **30** can be formed in different manners, configurations, and shapes, the valve plate **30** of the illustrated embodiment includes arms **30a** extending perpendicularly from the actuator member **26** corresponding to, and adapted to cover, adjacent elongated valve openings **40**. While the supports **22** are affixed to the substrate **50**, the valve plate **30** is formed integrally with the actuator member **26** and the arched beams **24** and can move relative to the substrate **50**. Thus, the valve plate **30** is also formed of a single crystalline material, such as single crystalline silicon.

In operation, thermal actuation of the microactuators **28** and **29** displaces the actuator member **26** in the predetermined direction (the direction of arch of the arched beams **24**), thereby also displacing the valve plate **30**. Therefore, with respect to a normally-open valve **10**, the valve plate **30**, with the microactuators **28** and **29** in a non-actuated or ambient state, may be spaced apart from or incompletely cover the

corresponding valve openings **40** in the microelectronic substrate **50**. Upon thermal actuation of the microactuators **28** and **29**, such as by direct heating of the arched beams **24**, however, the valve plate **30** is preferably urged into engagement with the corresponding valve openings **40** in the microelectronic substrate **50**. For proper sealing by the valve **10**, the faces of the valve plates **30** adjacent the valve holes **40** preferably include valve seats (not shown in **FIG. 1**) for sealing the valve holes **40** when the valve plate **30** is disposed thereover. As such, the MEMS device of this embodiment may serve as a valve **10** by controllably opening and closing valve openings **40** through the microelectronic substrate **50** that forms the body of the valve **10**. By appropriately connecting the valve **10** into a hydraulic system, the fluid flow therein can be controlled by selectively thermally actuating the microactuators **28** and **29**. Further, a valve **10** according to the present invention may be formed in a number of different configurations, for example, as a normally-open valve, a normally-closed valve, or a combination thereof where some valve holes **40** may be opened by thermally actuating the microactuators **28** and **29**, while other valve holes **40** are thereby closed. With respect to a normally-closed valve, the valve in an ambient state provides that the valve plate **30** is engaged with and seals the valve holes **40**. Upon thermal actuation of the microactuators **28** and **29**, the valve enters an actuated state where the arched beams **24** arch and displace the valve plate **30** such that the arms **30a** are disengaged from the valve holes **40**, thereby opening the valve holes **40**.

As described below, the microactuators **28** and **29** and the valve plate **30** are typically formed on a substrate **50** which may be comprised of a variety of materials, such as silicon, glass, or quartz. Although not necessary for the practice of the invention, the microactuators **28** and **29** and the valve plate **30** are preferably formed as a unitary structure from a single crystalline material, such as silicon, that is provided in the form of a wafer. The microactuators **28** and **29** and the valve plate **30** are typically separated from the substrate **50** by an oxide layer and/or other intermediate layers (not shown) deposited on the substrate **50**. The intermediate oxide layer is typically selectively removed such that portions remain, for example under the supports **22**, but maybe not under the arched beams **24** or the actuator member **26**, or the valve plate **30** to facilitate movement of these components with respect to the substrate **50**.

With a separate layer/layers disposed between the substrate **50** and the microactuators **28** and **29**/valve plate **30** structure, a gap may exist between the valve plate **30** and the valve holes **40** since the supports **22** are separated from the substrate **50** by the intermediate layer(s). As such, the valve **10** must be configured such that the valve plate **30** is capable of sealingly engaging the valve holes **40**. For example, additional surface features on the surface of the substrate **50** surrounding the valve holes **40**, such as a part of the intermediate layer, may be necessary to provide proper seating between the holes **40** and the valve plate **30**. Also, according to a particularly advantageous embodiment of the present invention, the side of the valve plate **30** adjacent to the substrate **50** may have at least one valve seat (not shown) formed thereon to provide effective sealing between the valve plate **30** and the substrate **50** about the valve holes **40**. The valve seat may be comprised of, for example, the same single crystalline silicon as the valve plate **30** or as a separate structure formed of, for instance, silicon nitride or polysilicon.

Since the valve plate **30** of the MEMS valve **10** according to the present invention must be movable with respect to the substrate **50**, its only connections to the substrate **50** are, for example, the spaced apart supports **22** anchoring the arched beams **24** to the substrate **50**. As such, this general structural characteristic of the microactuators **28** and **29** and the valve plate **30** could normally limit the operational pressure of the MEMS valve **10**. However, the higher aspect ratio structures attainable through the use of, for instance, single crystalline silicon components formed with deep reactive ion etching, enhances the out-of-plane stiffness of the components and allows the MEMS valve **10** to operate at relatively higher pressures. In addition, the MEMS valve **10** according to an advantageous embodiment of the present invention may further include a series of out-of-plane mechanical stops **45** disposed adjacent the valve plate **30** and operably connected to the substrate **50**. Preferably, the stops **45** are configured to have a tab portion that overlaps at least a portion of the valve plate so as to restrain out-of-plane deflection of the valve plate **30**, as well as to facilitate the alignment thereof, with respect to the substrate **50**. The stops **45** may thus further enhance the operational pressure limit of the MEMS valve **10**.

In accordance with the present invention, several associated methods may be used to produce the MEMS device, such as a valve **10**, having single crystalline components. As shown in **FIG. 2A** and according to one advantageous method, a microelectronic substrate **50** is first fabricated with at least one wet etched or dry etched trench **52** for thermal isolation of the arched beams **24** of the microactuator **20** and with at least one partial valve opening **42**. The substrate **50** is then oxidized such that an insulating oxide layer **54** is formed thereon as shown in **FIG. 2B**. Thereafter, as shown in **FIG. 2C**, the oxide layer **54** is selectively removed, for example, by wet etching, and the substrate **50** further etched to form the valve opening(s) **40**.

As shown in **FIG. 2D**, a first wafer **31** comprised of a single crystalline material, such as silicon, is then patterned to define at least one valve seat **36** corresponding to the valve openings **40** in the microelectronic substrate **50**. At this point, the first wafer **31** may also be patterned and at least partially etched to define the at least one microactuator **20** and valve plate **30** structures, although the final microactuator **20** and valve plate **30** structures are typically formed after bonding the first wafer **31** to the substrate **50**. Further, the first wafer **31** could also be selectively doped at this point in order to produce the desired conductivity characteristics such as, for example, about the arched beams **24**.

Once the microelectronic substrate **50** and the first wafer **31** have been prepared, the two wafers are bonded together as shown in **FIG. 2E**, for example, by fusion bonding. The two wafers are bonded together such that the at least one valve plate **30** is capable of engagement with the valve openings **40** via the valve seats **36** in either a normally-open or a normally-closed condition, as desired. Following the bonding process, the first wafer **31** is typically polished to a desired thickness as shown in **FIG. 2F**.

As shown in **FIG. 2G**, the first wafer **31** may then be oxidized to form an oxidation layer **38** thereon after the formation of holes **45a** therein corresponding to the locations of the stops **45**. The formation of the holes **45a** for the stops **45** and the subsequent oxidation process are more particularly shown in **FIG. 3A** since the stops **45** are typically disposed perpendicularly to the cross-section as shown in **FIG. 2G**. Subsequently, as further shown in **FIG. 3B**, portions of the oxide layer **38** are then removed by etching to form anchor sites **47** for the stops **45**. A polysilicon layer **49**, for example, is then deposited on the oxide layer **38**, as shown in **FIGS. 2H** and **3C**, from

which the stops **45** are then formed. **FIGS. 2I** and **3D** further show that, following deposition of the polysilicon layer **49**, the polysilicon layer **49** is then patterned and etched to form the stops **45** before the oxide layer **38** is removed by wet etching. The stops **45** are thus anchored to the first wafer **31** at the anchor sites **47** and extend over the edges of a portion of the first wafer **31** which is subsequently processed to form the valve plate **30**. As shown in **FIG. 2J**, the microactuators **28** and **29** and the valve plate **30** may then be formed by etching the components, such as the supports **22**, the arched beams **24**, the actuator member **26**, and the arms **30a**, from the single crystalline silicon first wafer **31**. As shown, the MEMS valve **10** may further include metal pads **39** formed by a metallization and etching process either before or after the at least one microactuator **20** and at least one valve plate **30** are formed, wherein the metal pads **39** facilitate electrical contact to the microactuators **28** and **29**. In some embodiments, the metal pads **39** may facilitate electrostatic clamping of the valve plate **30** as a method of restraining the valve plate **30** in a predetermined position with respect to the valve openings **40**.

In more detail, at least one microactuator **20** and at least one valve plate **30** may be formed from a single crystalline silicon wafer by initially depositing a mask layer upon the single crystalline silicon first wafer **31**. It will be understood by those having skill in the art that when a layer or element as described herein as being "on" another layer or element, it may be formed directly on the layer, at the top, bottom or side surface area, or one or more intervening layers may be provided between the layers. The mask layer is typically a photoresist or light sensitive polymer material. Once deposited upon the wafer **31**, the mask layer is patterned such that the photoresist which remains on the wafer **31** defines the microactuators **28** and **29** (each generally comprised of a pair of spaced apart supports **22**, at least one arched beam **24**, and an actuator member **26**) and the valve plate **30**. Once the photoresist is patterned, the wafer **31** is etched so as to form the microactuators **28** and **29** and valve plate **30** structure. Preferably, the wafer **31** is etched by deep reactive ion etching capable of forming thin silicon structures from the wafer **31** having aspect ratios on the order of 10:1. The high aspect ratios for the silicon arched beams **24** and valve plate **30** increases the out-of-plane stiffness of these structures and contributes to more robust devices. In addition, the fabrication techniques of the present invention allow features and/or components to be more closely spaced. For

example, closer spacing between adjacent silicon arched beams **24** increases the efficiency with which the arched beams **24** are heated due to increased heat transfer between adjacent beams **24**. Once the wafer **31** has been etched, the photoresist is removed. At this point, the first wafer **31** may be further doped, either selectively or in a blanket process. Selective doping is used, for example, to separate conductive regions from non-conductive regions. More particularly, selective doping could be used, for instance, to form alternating heated and non-heated arched beams **24** or portions thereof. By doping alternate arched beams **24** to enhance/inhibit the conductivity thereof, only alternating arched beams **24** would be heated and actuated by direct heating means, such as by flowing an electrical current therethrough. The non-conducting, non-heated arched beams **24** may subsequently be actuated by the ambient temperate thereabout produced by the adjacent heated arched beams **24**. Thus, additional gains in efficiency and reduced energy consumption may be recognized since fewer arched beams **24** need to be heated by the electrical current to provide the desired degree of actuation.

As shown in **FIGS. 4A - C**, and according to one advantageous embodiment of the present invention, a MEMS valve **410**, shown in an alternate configuration with one microactuator **420** and two valve plates **430**, may be provided with a second wafer **460** bonded thereto. Significant features of the second wafer **460** may include, for example, an appropriately etched cavity **462** disposed over the microactuator **420** so as to form a protective covering therefor. As further shown in **FIG. 4B**, the cavity **462** would extend over the actuator **420**, covering the arched beams **424** and portions of the actuator member **426**. As also shown in **FIG. 4C**, the second wafer **460** may further include an appropriately etched channel **464** at the ends of the cavity **462** such that the second wafer **460** is spaced apart from the actuator member **426** of the microactuator **420** to allow movement and operation thereof. **FIG. 4B** also shows that the second wafer **460** may further be configured to provide vias **466**, appropriately spaced to correspond to the valve portions of the valve **410**, to provide appropriate conduits for the flow of the fluid controlled by the valve **410**. The second wafer **460** is then bonded to the first wafer **431**, such as by a fusion bonding or an anodic bonding process, to permit operation of the valve **410** as described. As bonded to the first wafer **431**, the second wafer **460** may also serve as an out-of-plane mechanical stop for the microactuator **420**.

A further aspect of the present invention as described herein includes a metallization step used to define interconnects and contact pads about the MEMS valve **10**. As shown in **FIG. 5**, metallization may also be used to more particularly define and control the heating characteristics of the arched beams **24**. A typical arched beam **24** is formed of a semiconductor material and comprises distal ends **23**, each disposed adjacent the respective supports **22**, and a medial portion **25** extending between the distal ends **23**. Accordingly, a metallization layer or trace **70** is evaporated on the supports **22** to serve as contact pads for a current source (not shown) operably connected therebetween. Application of an electrical current between the supports **22** and across the arched beams **24** internally generates the heat necessary to thermally actuate the arched beams **24** due to the resistivity of the arched beams **24**. Evaporation typically involves depositing a metal, such as nickel, copper, or gold, on the desired surface. Portions of the metal are then removed by, for example, a wet etch process to form the desired metal configuration on the microactuator **20** structure. Alternatively, a lift-off process may be used to configure the evaporated metal, wherein a photoresist may be applied to the microactuator **20** structure and patterned to leave photoresist on portions of the microactuator **20** where metal is not desired. Removal of the photoresist following the metal evaporation process thus also removes the undesired metal to leave the desired metal configuration on the microactuator **20** structure.

Surprisingly, it has been found that extending the evaporated metal layer **70** from the supports **22** onto the distal portions **23** of the arched beams **24** concentrates the heated region of the arched beams **24** to the medial portions **25** thereof. The metallization traces **72** extending onto the distal portions **23** of the arched beams **24** provide a low resistance pathway for the current to flow. At the ends of the traces **72**, the current is then forced to flow through the higher resistance, medial portions **25** of the silicon arched beams **24**. Thus, the medial portions **25** of the arched beams **24** experience a greater heating effect due to the current than the distal portions **23** thereof, such that much greater thermal actuation is achieved at the medial portions **25** of the arched beams **24** to produce the desired displacement of the microactuator **20**. Reducing the heated region of the arched beams **24** may further provide a corresponding reduction in the energy required to heat the arched beams **24** to achieve the desired displacement.

FIG. 6 shows yet another advantageous embodiment of the present invention, similar to the embodiment shown in **FIG. 1**, but further comprising at least one latch **680** configured to interact with at least one corresponding engaging member **682** operably connected to the valve plate **630**. According to one embodiment of the present invention, the MEMS valve **610** may have a latch **680** and corresponding engaging member **682** disposed on either side of the valve plate **630**. The latch **680** may further be configured for thermal operation. That is, for example, each side of the latch **680** may be comprised of two strips of silicon **684** and **686**, wherein one of the strips is narrower than the other. The application of an electrical current through the latch **680** results in the latch **680** being heated due to the resistance of the silicon strips **684** and **686**. Since the narrower strip **686** typically has a higher resistance due to the smaller cross-sectional area, it will be heated to a greater extent than the wider strip **684**. Thus, as shown in **FIG. 6**, the narrower strip **686** will expand more than the wider strip **684** and cause the sides of the latch **680** to diverge. Subsequent actuation of the microactuators **628** and **629** causes the valve plate **630**, and thus the engaging members **682**, to be displaced toward the latches **680**. Once the engaging members **682** are displaced to a position between the sides of the respective latches **680**, the flow of electrical current through the latches **680** can be halted, thus causing the sides of the latches **680** to cool and converge to their original configurations and trapping the corresponding engaging member **682** therebetween. The valve **610** may then be deactuated such that the valve plate **630** is maintained in the desired position by the latches **680**, thus retaining the valve **610** in an "actuated" position without relying on an electrical actuation source for the microactuators **628** and **629**. The valve **610** is subsequently returned to its "deactuated" position by reversing the detailed steps. The thermal latches **680** thus facilitate additional energy conservation for a MEMS valve **610** by providing a valve maintainable in an actuated position without requiring a continuous energy input to either the microactuators **628** and **629** or the thermal latches **680**.

Thus, a MEMS device, such as a valve **10**, can be formed in accordance with the present invention that includes arched beams **24** and at least one valve plate **30** formed as a unitary structure from single crystalline silicon. Fabricating the arched beams **24** and the valve plate **30** from single crystalline silicon allows the arched beams **24** and valve

plate **30** to be precisely formed. More particularly, the arched beams **24** and valve plate **30** may be formed with aspect ratios of up to at least 10:1, more particularly by using a deep reactive ion etching process. The higher aspect ratios of these components increases their out-of-plane stiffness and constructs a more robust device. The fabrication techniques of the present invention also permit components of the valve **10** to be more closely spaced. The closer spacing between adjacent silicon arched beams **24**, for example, results in more effective transfer of heat between adjacent arched beams **24**. In addition, the single crystalline silicon microactuator **20** can be directly heated, such as by passing a current therethrough, which is generally more efficient than indirect heating. Further, although the coefficient of thermal expansion of silicon is less than that of metals, such as nickel, silicon is significantly less dense than nickel such that for a given amount of power, a silicon arched beam can generally be heated more than a corresponding nickel arched beam. The heating effect may further be enhanced by the extension of the metallization traces onto the silicon arched beams to controllably constrain the dimensions of the thermally actuated portion of the silicon arched beam. The inclusion of thermal latches may further increase the efficiency of MEMS valves by permitting the valve plates to be maintained in an actuated position without requiring a continuous energy input to either the microactuators or the latches. Therefore, the MEMS valve of the present invention can have greater out-of-plane stiffness, can be more robust, and can be more controllably and efficiently heated and actuated than conventional MEMS devices having metallic arched beams.

Many modifications and other embodiments of the invention will come to mind to one skilled in the art to which this invention pertains having the benefit of the teachings presented in the foregoing descriptions and the associated drawings. Therefore, it is to be understood that the invention is not to be limited to the specific embodiments disclosed and that modifications and other embodiments are intended to be included within the scope of the appended claims. Although specific terms are employed herein, they are used in a generic and descriptive sense only and not for purposes of limitation.

THAT WHICH IS CLAIMED:

1. A microelectromechanical valve comprising:

a microelectronic substrate defining at least one opening therethrough;

a thermally actuated microactuator disposed upon the substrate and comprised of a single crystalline material; and

at least one valve plate comprised of a single crystalline material and having at least one valve seat, the at least one valve plate being operably engaged with the microactuator and adapted to move the at least one valve seat between a disengaged open position and an engaged closed position with respect to the at least one opening upon thermal actuation of the microactuator.

2. A microelectromechanical valve according to Claim 1 wherein the microactuator further comprises:

spaced apart supports disposed on the substrate; and

at least one arched beam extending between the spaced apart supports and operably engaged with the at least one valve plate.

3. A microelectromechanical valve according to Claim 2 wherein the microactuator further comprises means for heating the at least one arched beam to cause further arching thereof such that the valve seat moves between a first position in which the valve seat is engaged with the at least one opening and closes the valve and a second position in which the valve seat is disengaged from the at least one opening and opens the valve.

4. A microelectromechanical valve according to Claim 2 wherein the microactuator further comprises an actuator member for coupling the plurality of arched beams together.

5. A microelectromechanical valve according to Claim 1 wherein the valve plate is disposed in a normally closed position with respect to the opening such that thermal actuation of the microactuator displaces the valve plate and causes the valve seat to disengage and open the opening.

6. A microelectromechanical valve according to Claim 1 wherein the valve plate is disposed in a normally open position with respect to the opening such that thermal actuation of the microactuator displaces the valve plate and causes the valve seat to engage and close the opening.

7. A microelectromechanical valve according to Claim 1 wherein the microactuator is thermally actuated by internal heating thereof.

8. A microelectromechanical valve according to Claim 1 wherein the microactuator is thermally actuated by external heating thereof.

9. A microelectromechanical valve according to Claim 1 wherein the microactuator is comprised of single crystalline silicon.

10. A microelectromechanical valve according to Claim 1 wherein the at least one valve plate is comprised of single crystalline silicon.

11. A microelectromechanical valve according to Claim 1 further comprising at least one mechanical stop disposed adjacent the valve plate for providing an out-of-plane restraint for the valve plate with respect to the substrate.

12. A microelectromechanical valve according to Claim 1 wherein the at least one valve seat is comprised of at least one of a single crystalline silicon, silicon nitride, and polysilicon.

13. A microelectromechanical valve according to Claim 1 further including at least one latch disposed on the substrate and capable of interacting with the valve plate following a predetermined displacement thereof due to thermal actuation of the microactuator such that the valve plate may be restrained in a predetermined position with respect to the opening.

14. A microelectromechanical valve according to Claim 13 wherein the latch is at least one of a thermally actuated latch and an electrostatically actuated latch.

15. A method of fabricating a microelectromechanical valve comprising:

providing a microelectronic substrate that defines at least one opening therethrough;

bonding a first wafer comprised of a single crystalline material upon the microelectronic substrate; and

forming a thermally actuated microactuator and at least one valve plate from the first wafer comprised of the single crystalline material such that the microactuator is adapted to operably engage the valve plate and such that portions of the microactuator and the valve plate are movable relative to the microelectronic substrate, the valve plate further having at least one valve seat movable between a disengaged open position and an engaged closed position with respect to the at least one opening defined by the microelectronic substrate in response to thermal actuation of the microactuator.

16. A method according to Claim 15 wherein the step of providing a microelectronic substrate further comprises the steps of depositing a photoresist layer upon the microelectronic substrate, patterning the photoresist layer to open at least one window to the microelectronic substrate corresponding to at least one valve opening, and partially etching the microelectronic substrate within the window defined by the photoresist layer to thereby partially form the valve opening.

17. A method according to Claim 16 further including the step of oxidizing the microelectronic substrate following the partial etching of the microelectronic substrate to form a thermal oxide layer thereon.

18. A method according to Claim 17 further including the step of etching the thermal oxide layer and the microelectronic substrate about the partially formed valve opening to complete the formation of the valve opening.

19. A method according to Claim 15 further including the step of forming at least one valve seat on the first wafer prior to the bonding step.

20. A method according to Claim 15 further including the step of at least partially forming a microactuator and at least one valve plate on the first wafer prior to the bonding step.

21. A method according to Claim 19 wherein the bonding step further comprises fusion bonding the first wafer to the microelectronic substrate such that the at least one valve seat is adjacent to the microelectronic substrate.

22. A method according to Claim 15 further including the step of polishing the first wafer to a desired thickness following the bonding step.

23. A method according to Claim 15 further including the step of forming at least one mechanical stop disposed adjacent the valve plate for providing an out-of-plane restraint for the valve plate with respect to the substrate following the bonding step.

24. A method according to Claim 15 wherein the step of forming a thermally actuated microactuator and a valve plate further comprises the steps of depositing a photoresist layer upon the first wafer, patterning the photoresist such that the photoresist which remains defines the microactuator and at least one valve plate operably engaged

therewith, and etching the first wafer to form the microactuator and said at least one valve plate.

25. A method according to Claim 15 further including the step of forming at least one latch from the first wafer following the bonding step, the latch being at least one of a thermally actuated latch and an electrostatically actuated latch and being capable of interacting with the valve plate following a predetermined displacement thereof due to thermal actuation of the microactuator to restrain the valve plate in a predetermined position with respect to the opening.

26. A method according to Claim 15 further including the step of forming a protective cover from a second wafer such that the protective cover is adapted to cover and protect the microactuator while providing an out-of-plane mechanical stop therefor.

27. A method according to Claim 26 further including that step of bonding the second wafer upon the first wafer so as to at least partially overlie the microactuator following the microactuator forming step.

28. A method according to Claim 15 further including the step of selectively doping the first wafer prior to the microactuator forming step to alter the conductivity of predetermined portions of the microactuator.

29. A microactuator comprising:

a microelectronic substrate;

spaced apart supports disposed upon said microelectronic substrate;

at least one arched beam formed of a semiconductor material and extending between said spaced apart supports, the arched beam having opposed distal portions proximate the respective supports and a medial portion extending between the distal portions; and

a metal layer disposed on the distal portions of said at least one arched beam, wherein the medial portion of the arched beam is

substantially free of said metal such that an electrical current passing between said supports preferentially heats the medial portion of the arched beam and causes further arching thereof.

30. A microactuator according to Claim 29 further including an actuator member operably coupled to said at least one arched beam and extending outwardly therefrom.

31. A microactuator according to Claim 29 wherein said at least one arched beam is comprised of single crystalline silicon.

32. A microactuator according to Claim 29 wherein the evaporated metal is comprised of at least one of nickel, gold, and platinum.

Figure 1

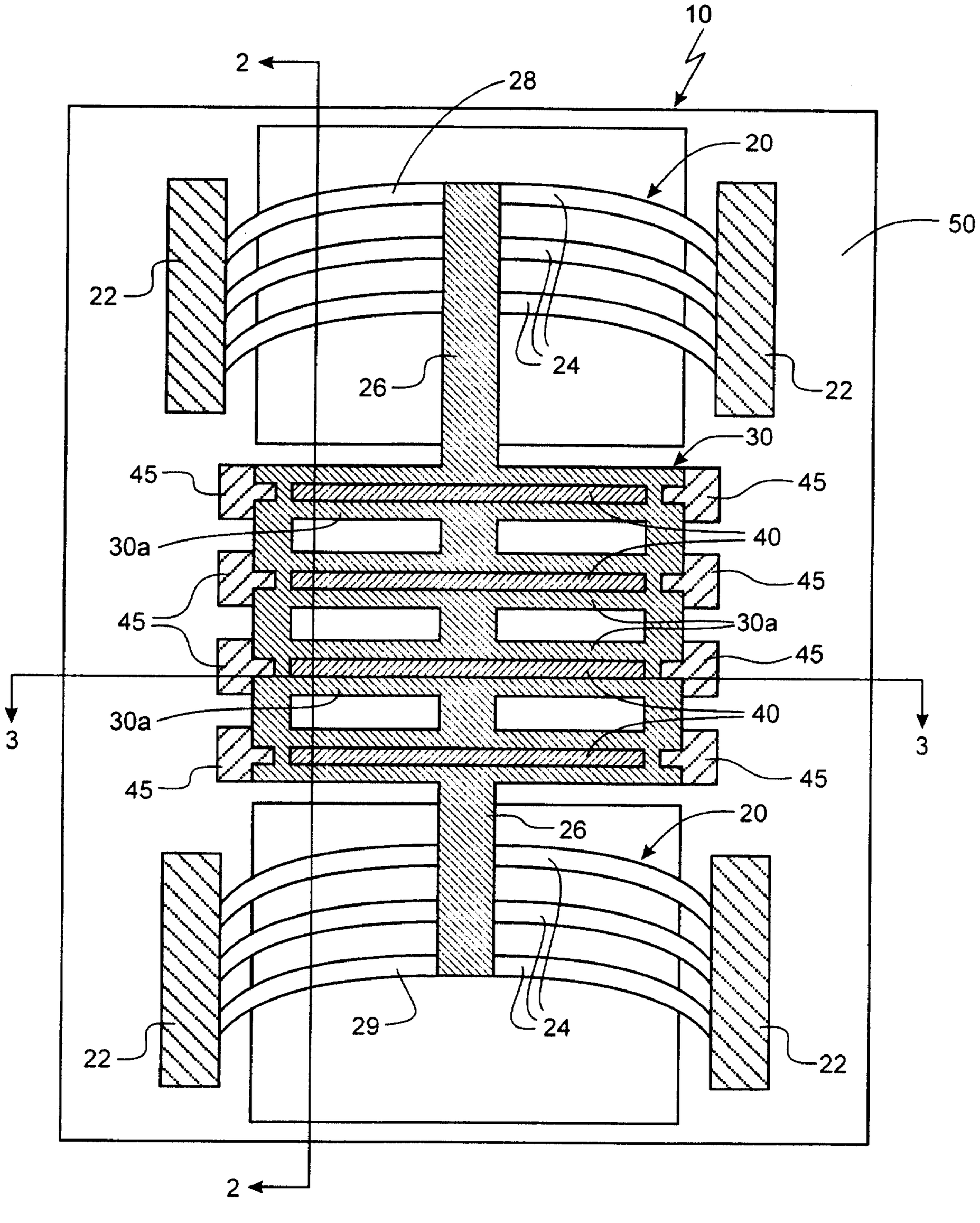
10
2
28
20
50
22
24
26
22
30
45
45
30a
40
45
45
30a
45
3
3
30a
40
45
45
20
26
29
24
22
22
2

Figure 2a

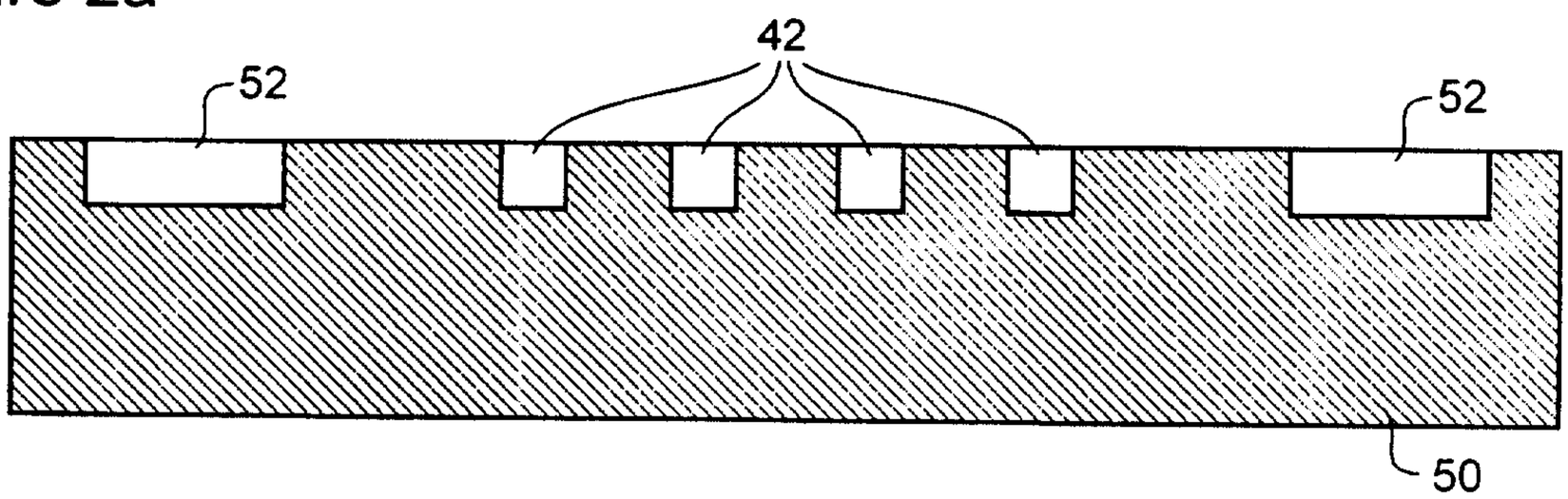

Figure 2b

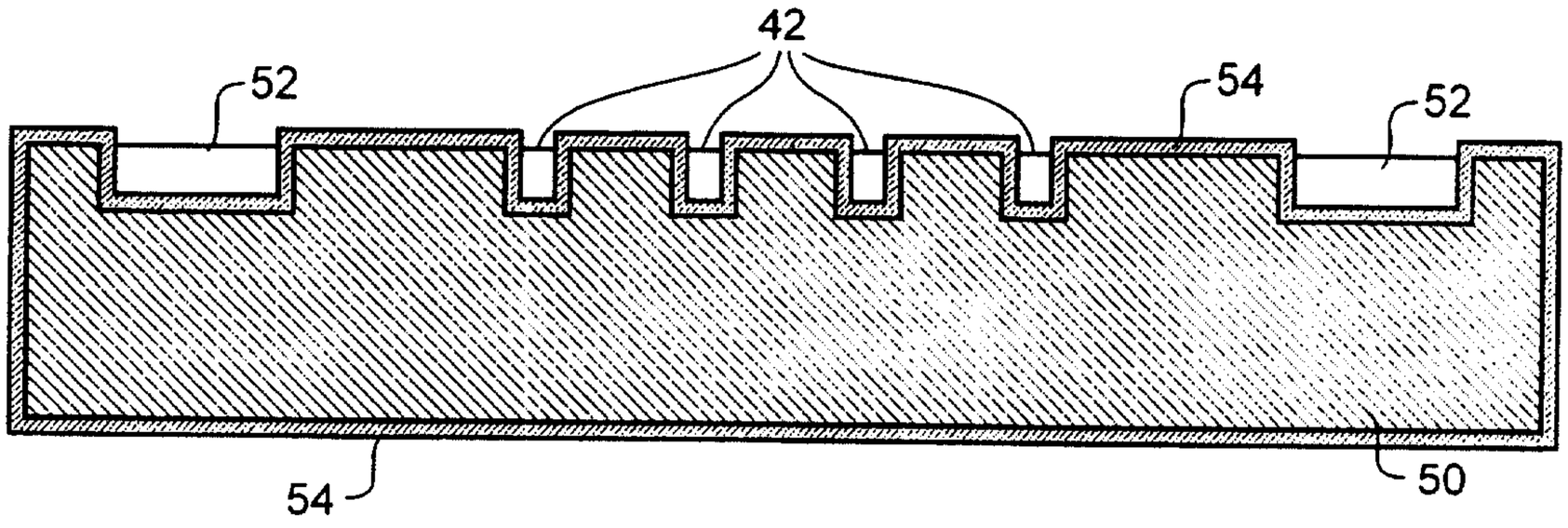

Figure 2c

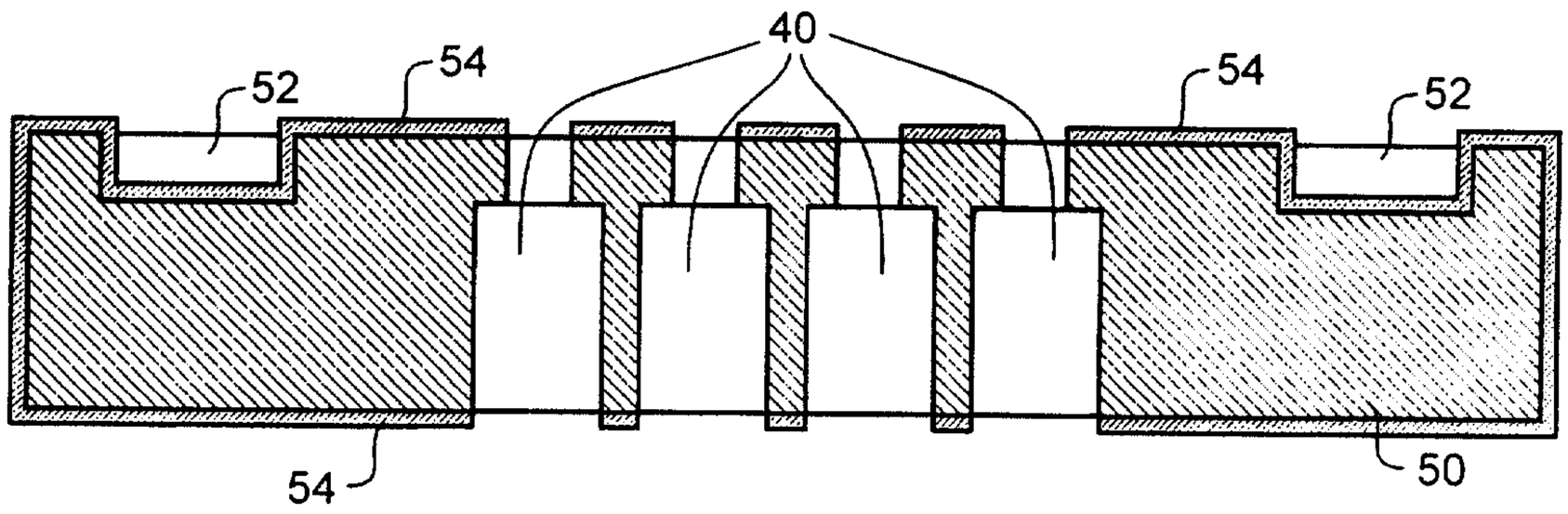

Figure 2d

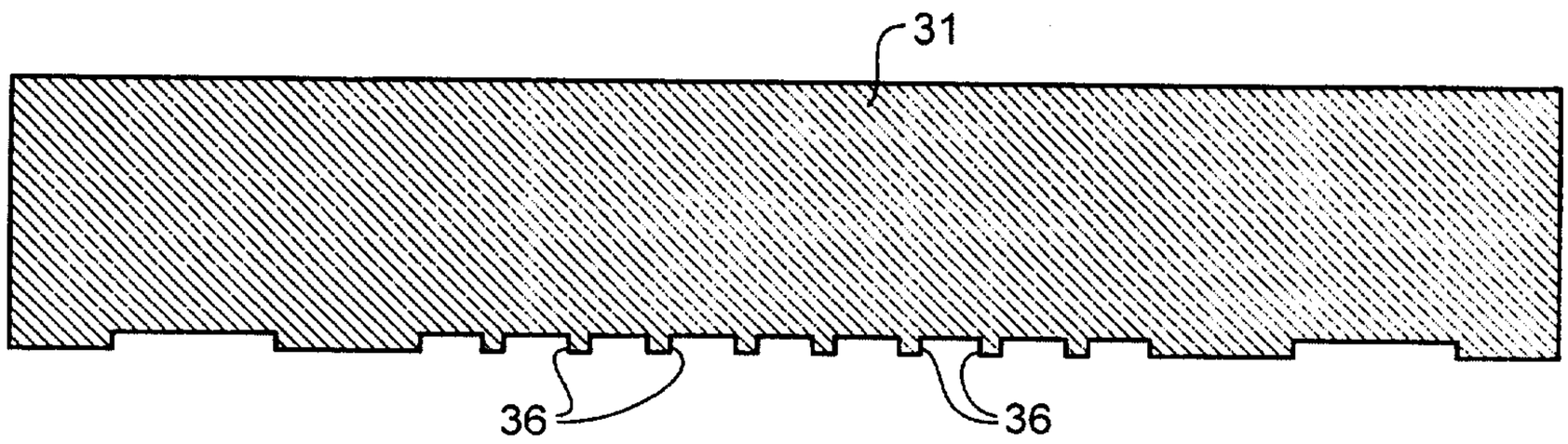

Figure 2e

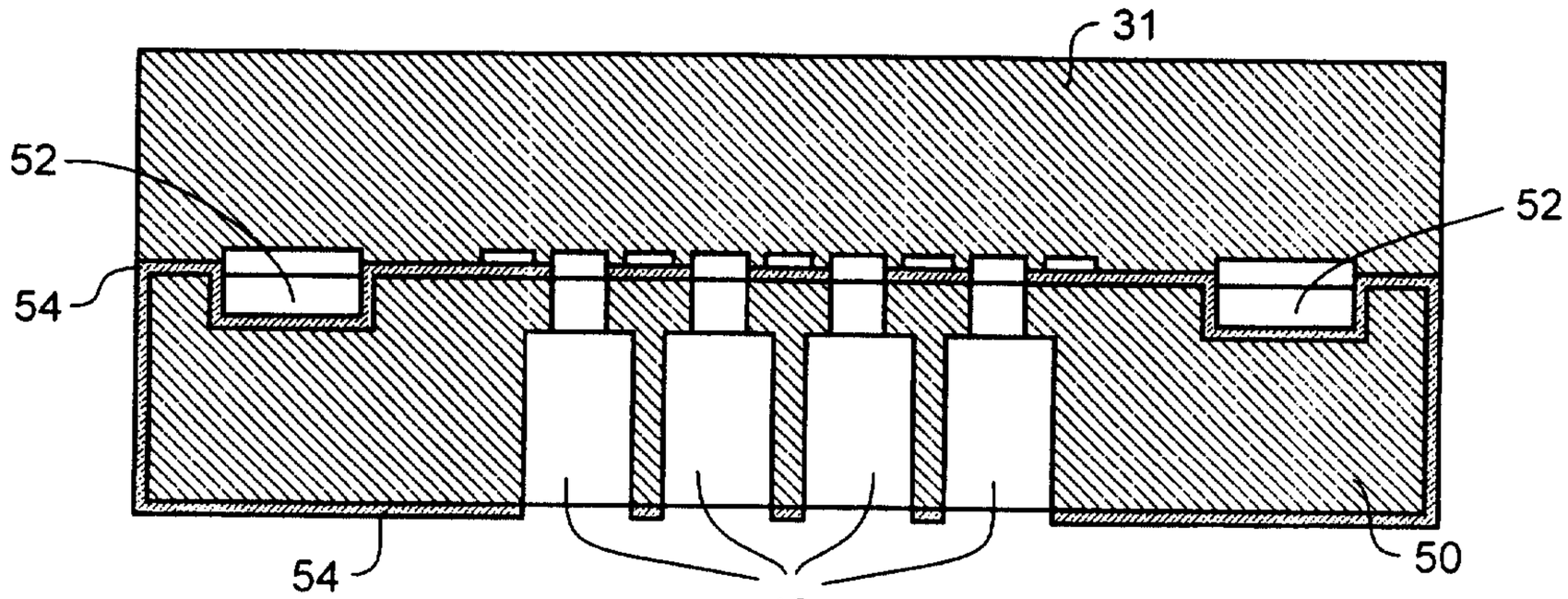

Figure 2f

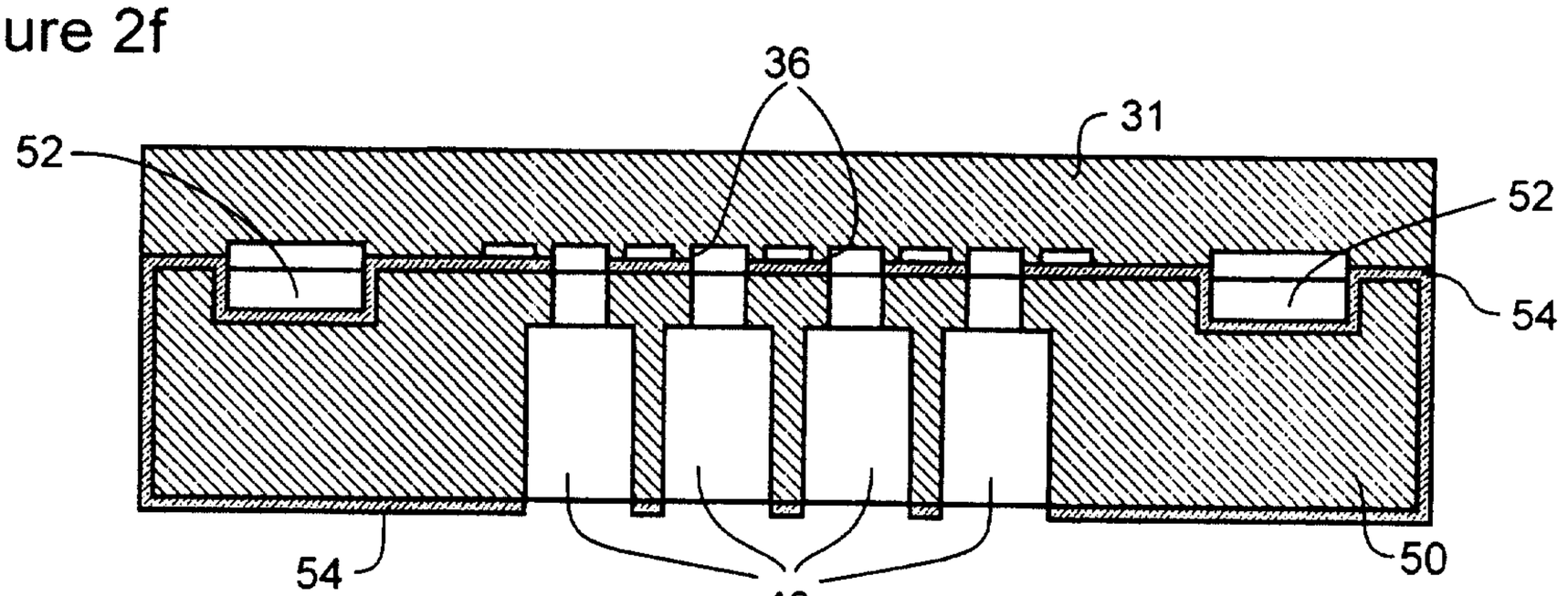

Figure 2g

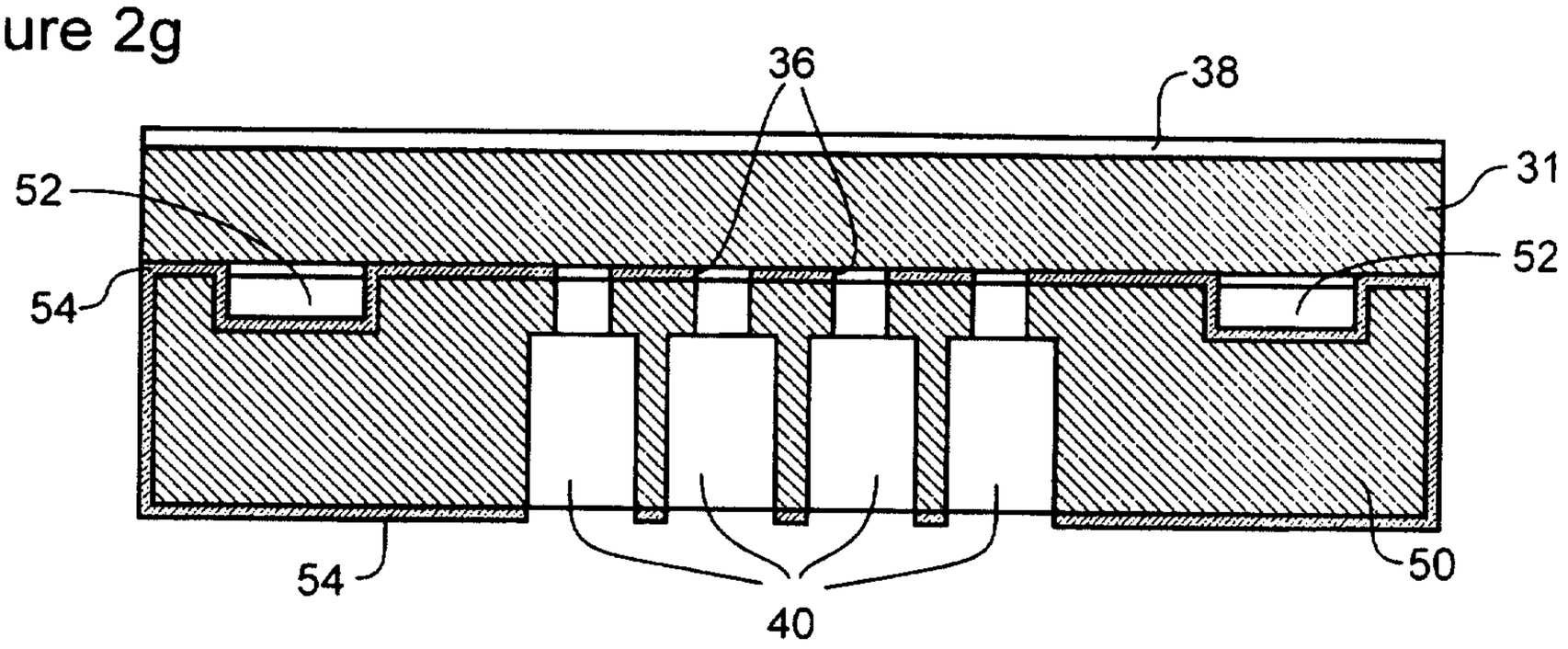

Figure 2h

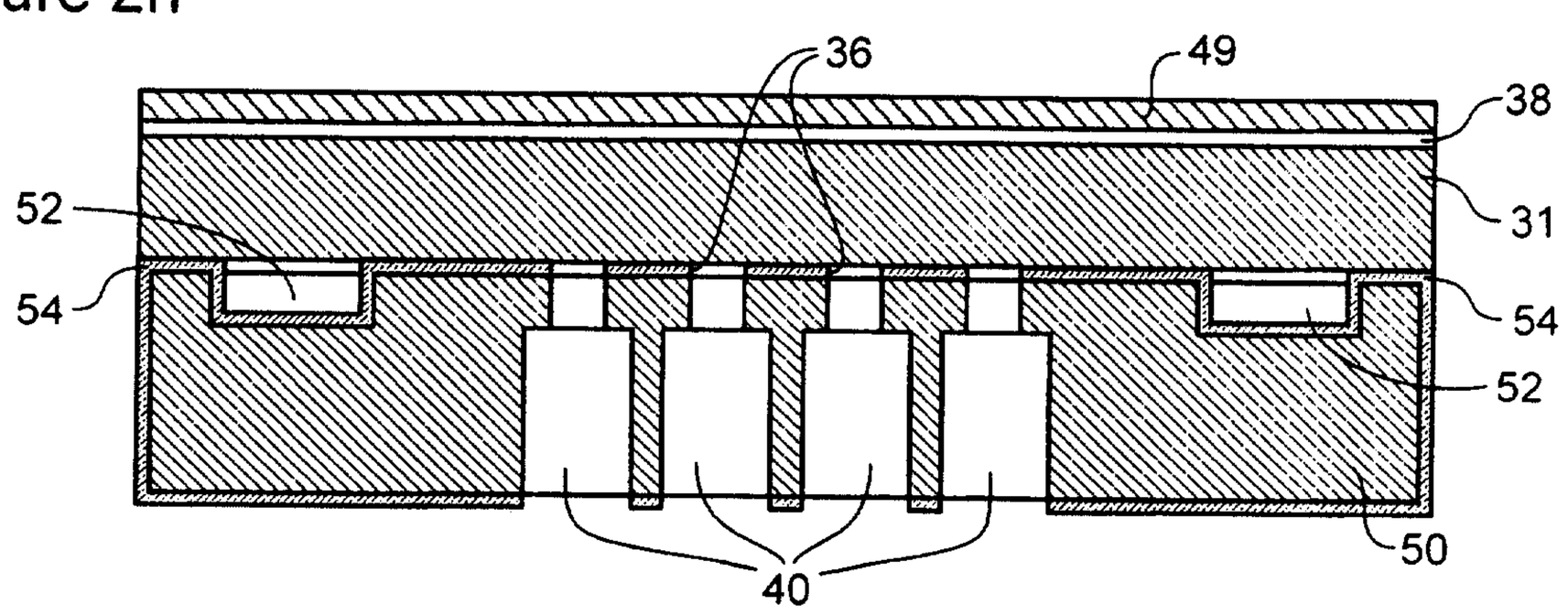

Figure 2i

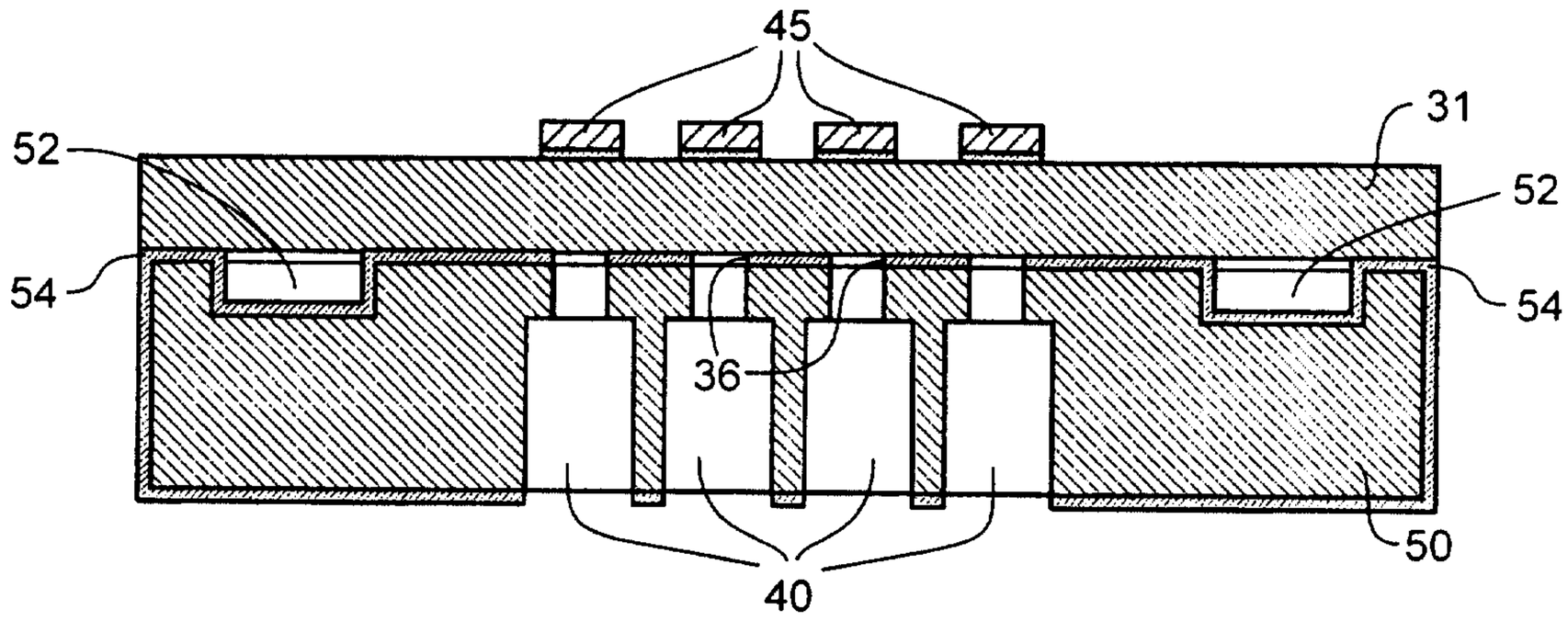

Figure 2j

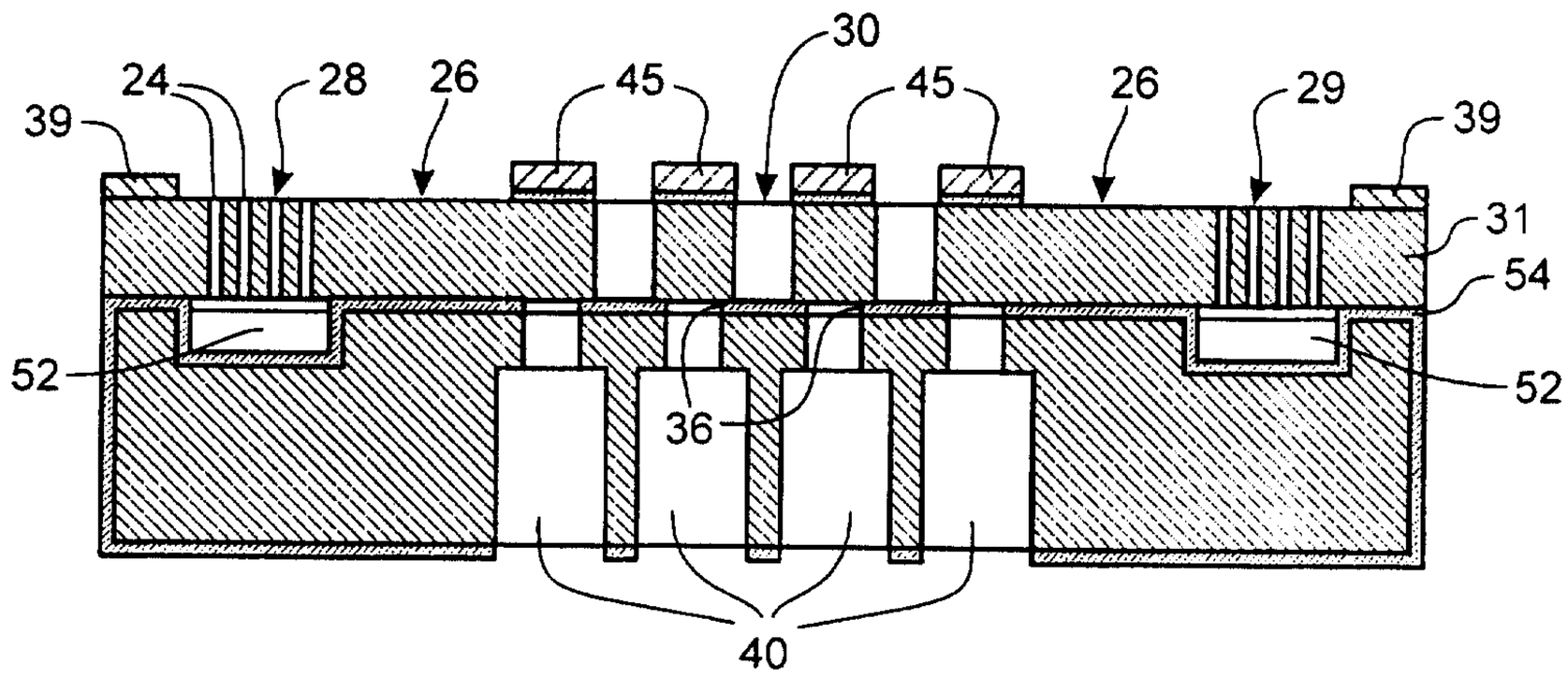

Figure 3a

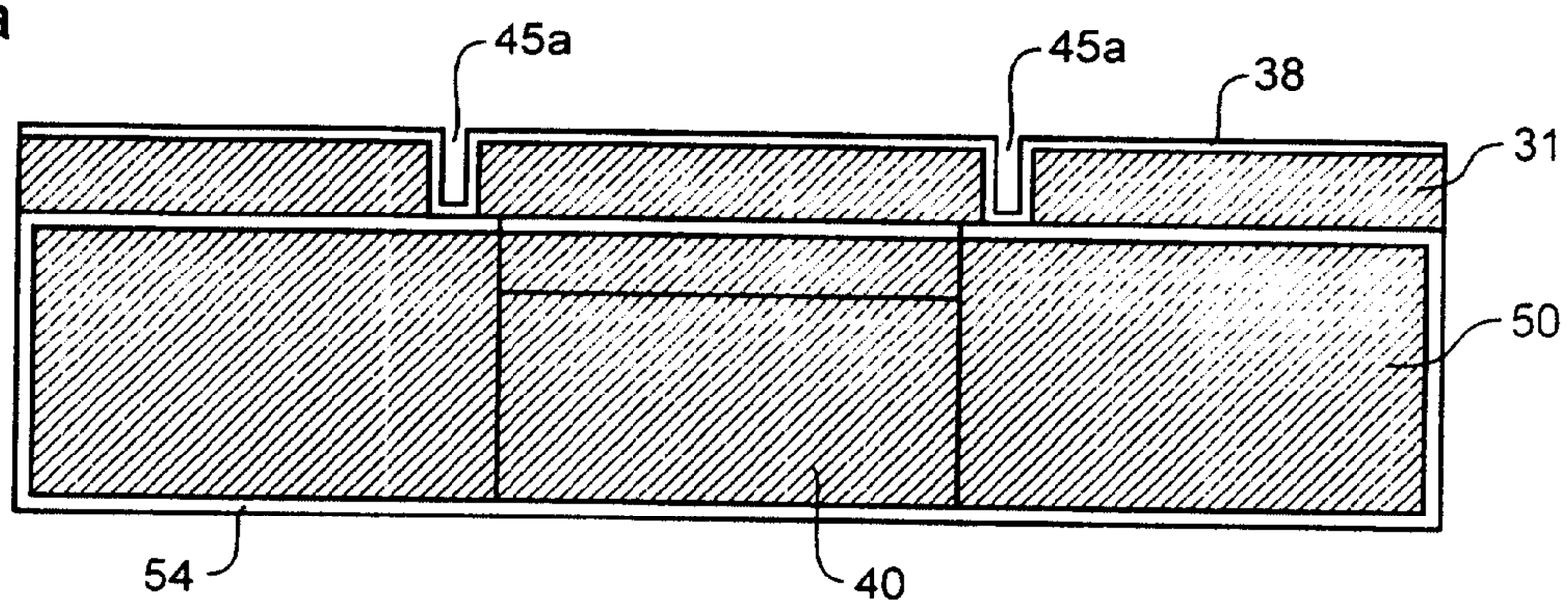

Figure 3b

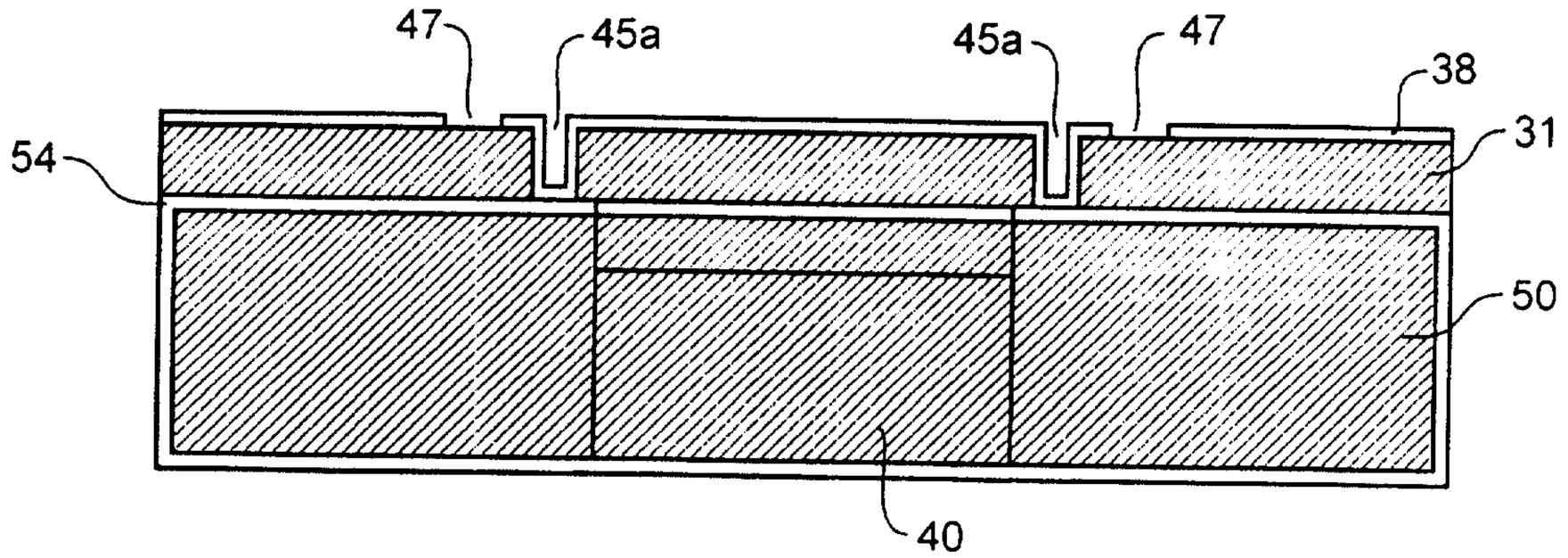

Figure 3c

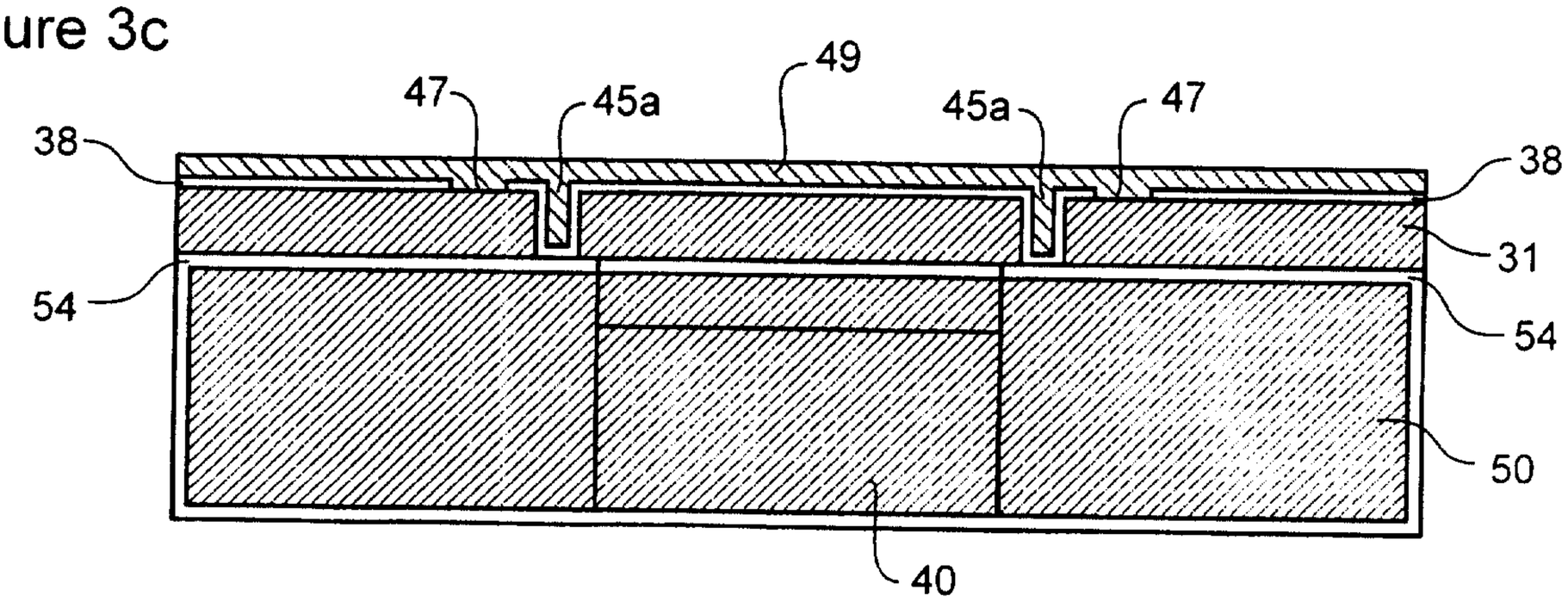

Figure 3d

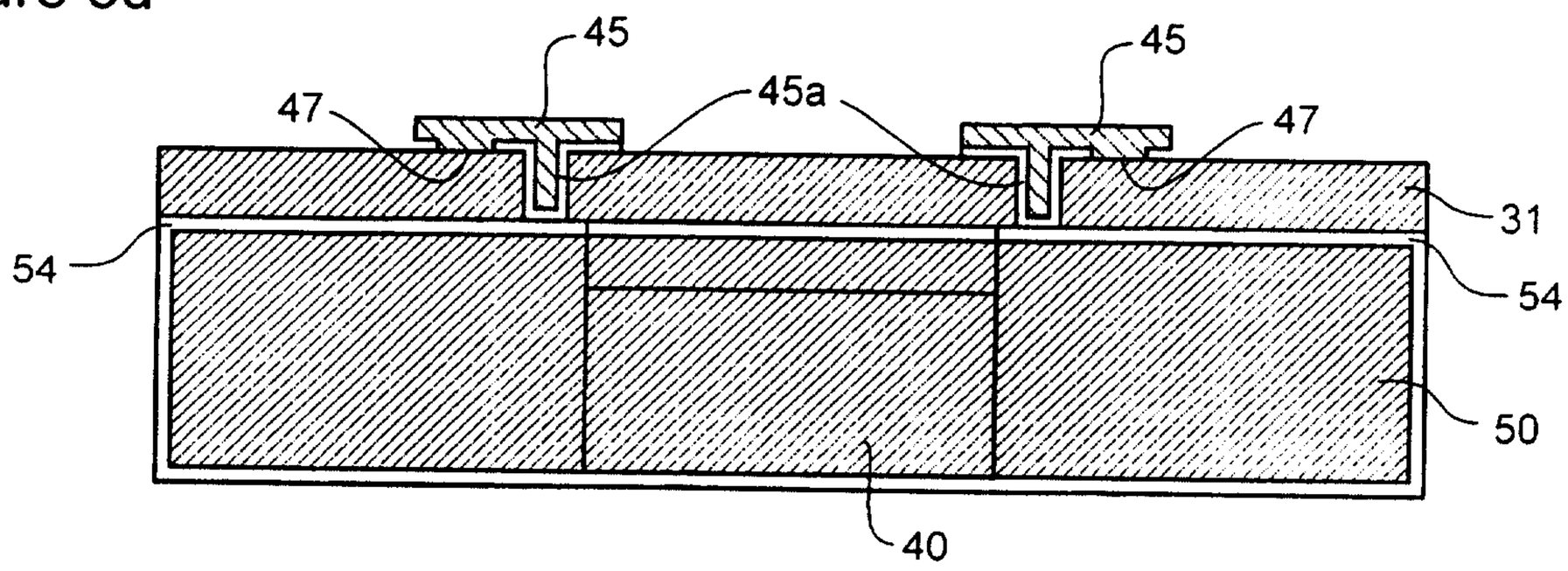

Figure 4a

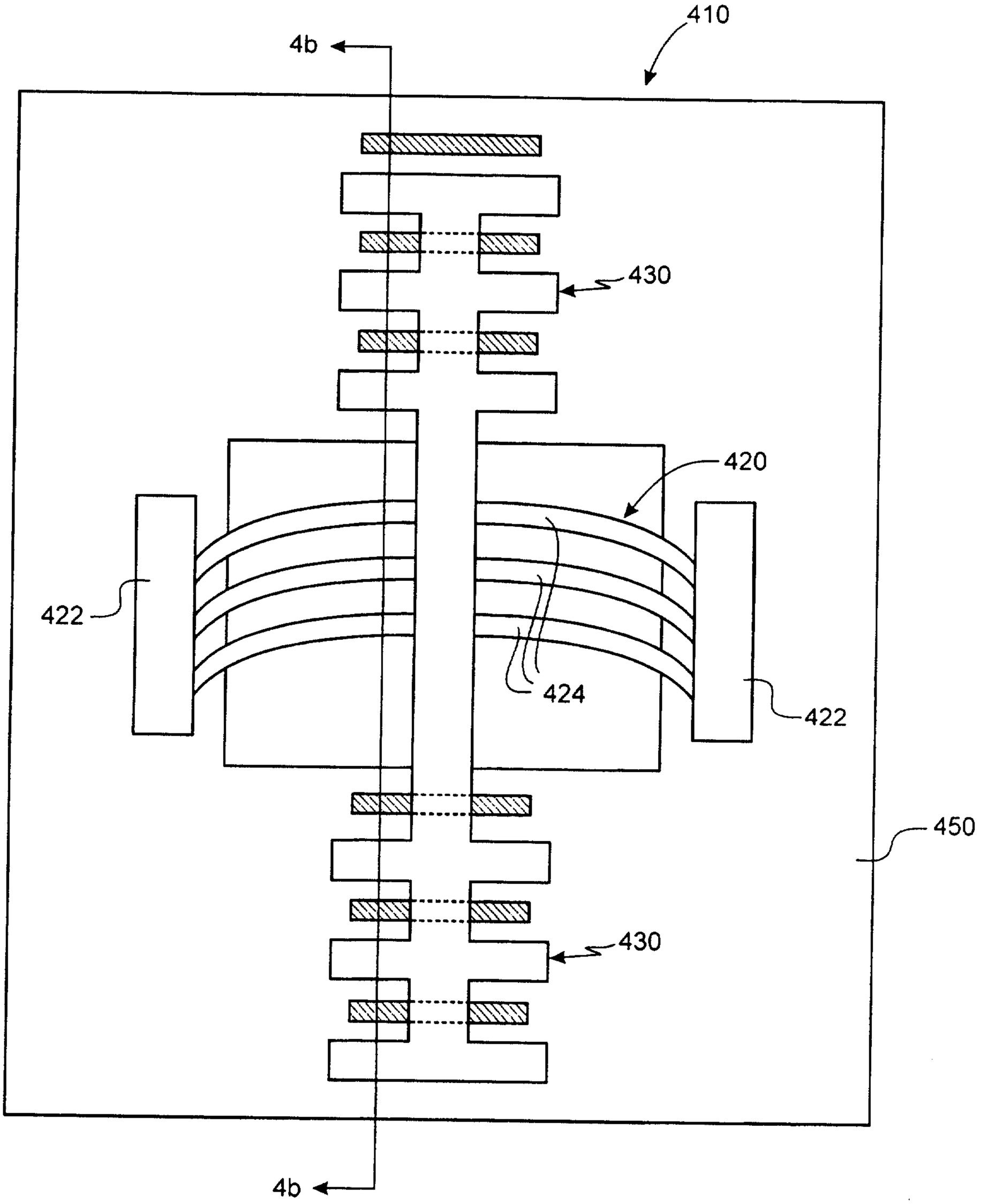

Figure 4b

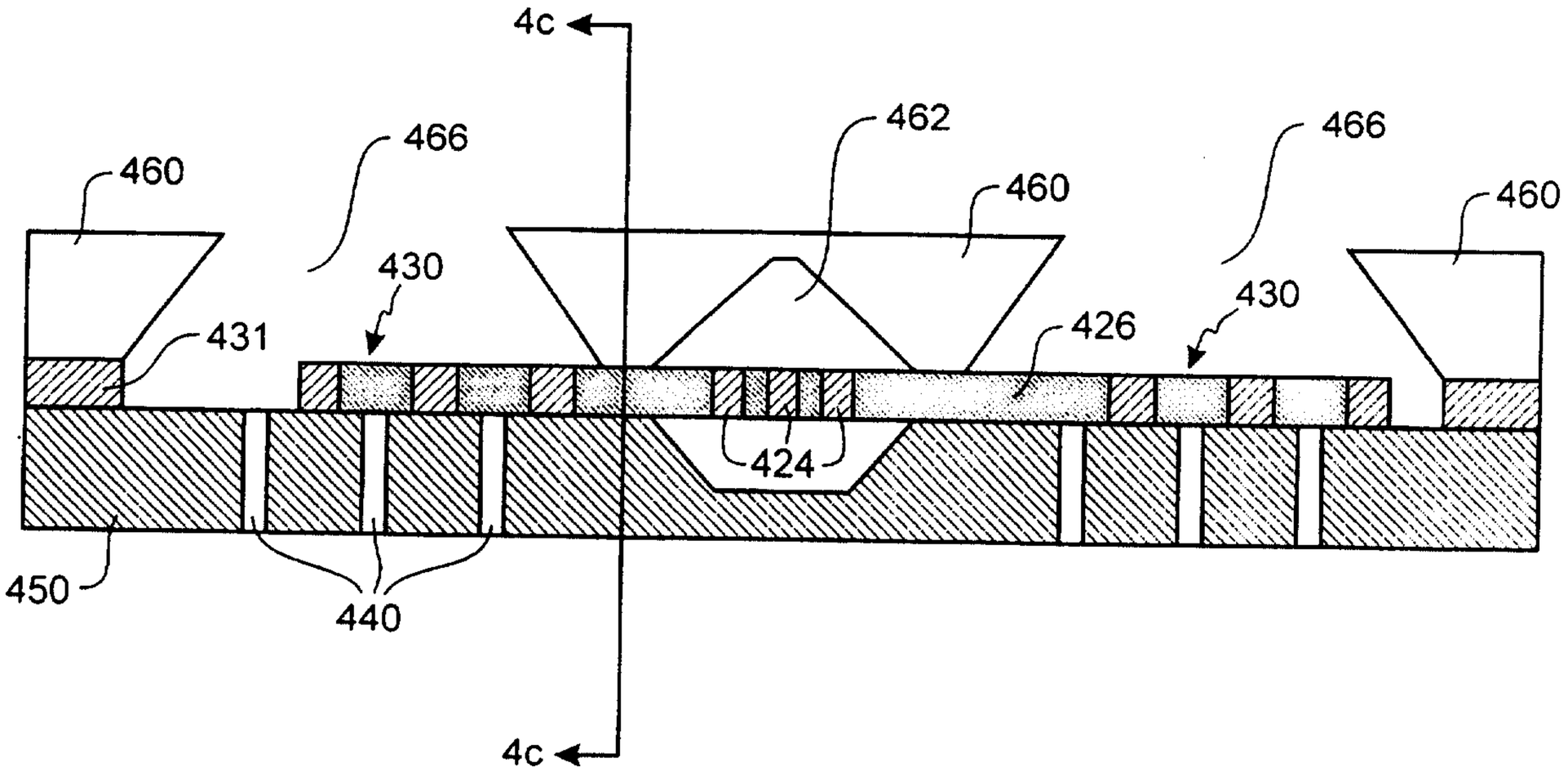

Figure 4c

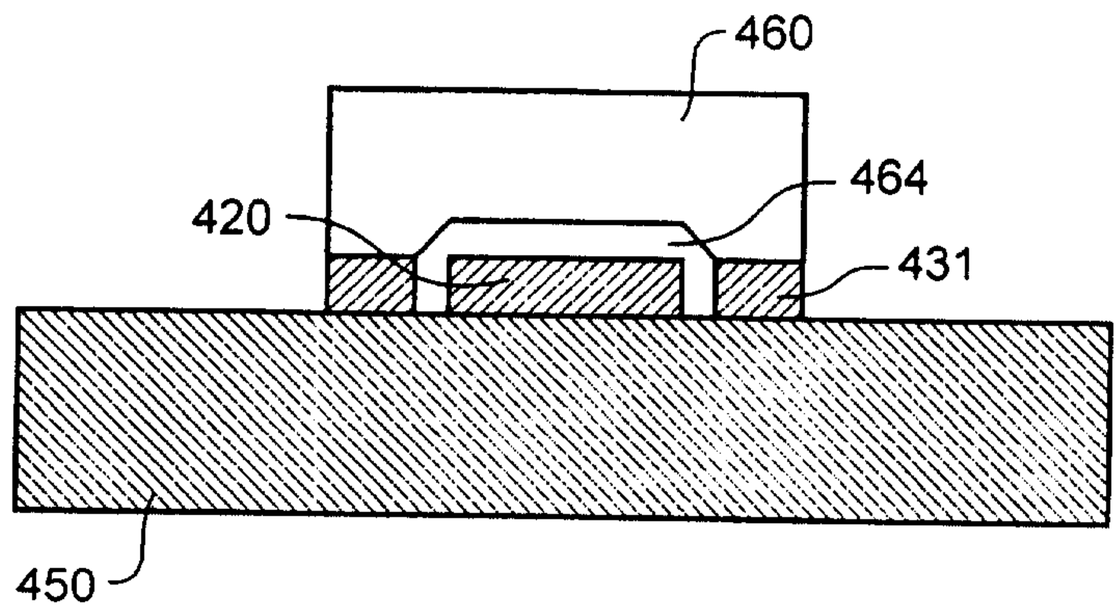

Figure 5

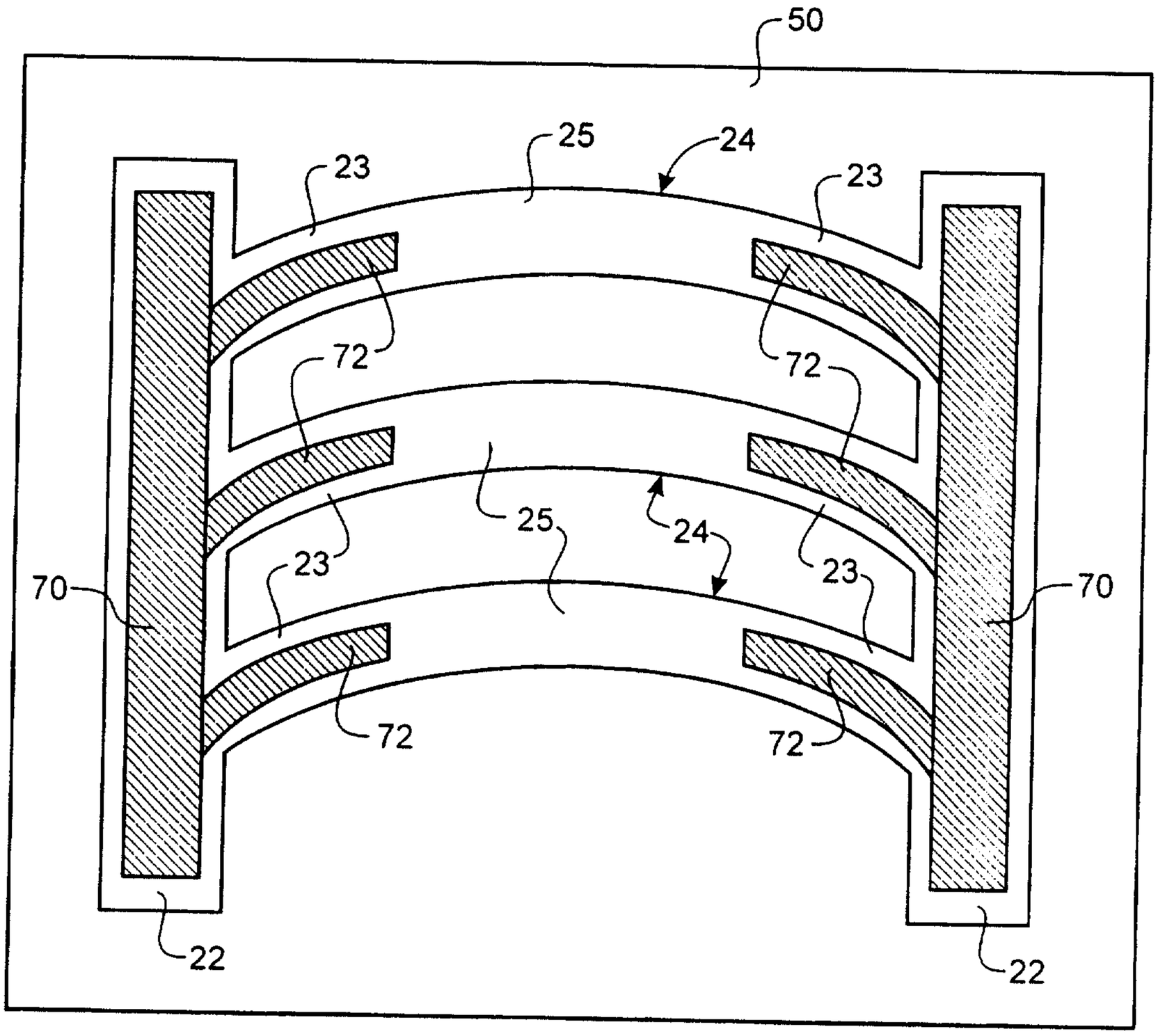

Figure 6

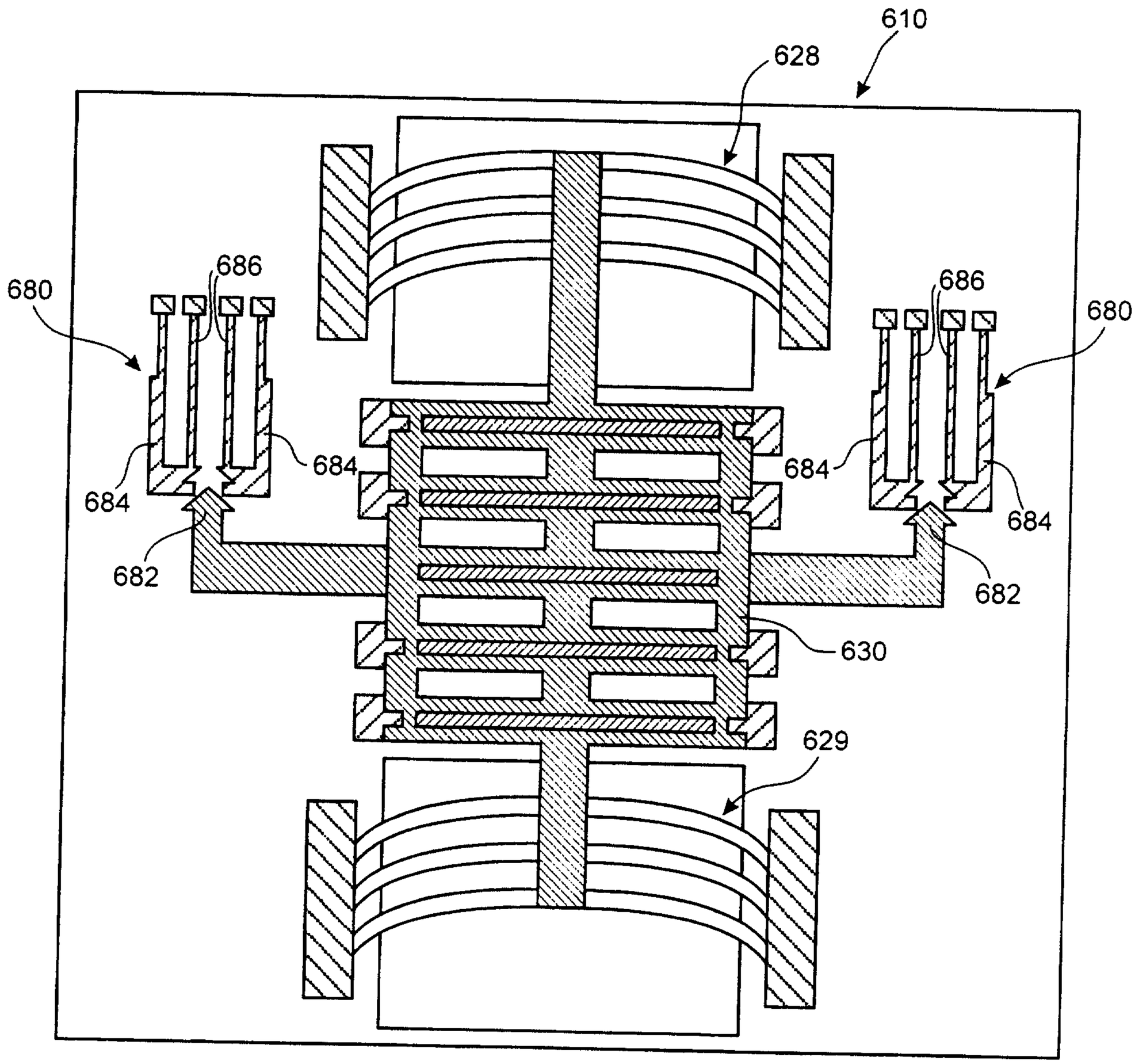

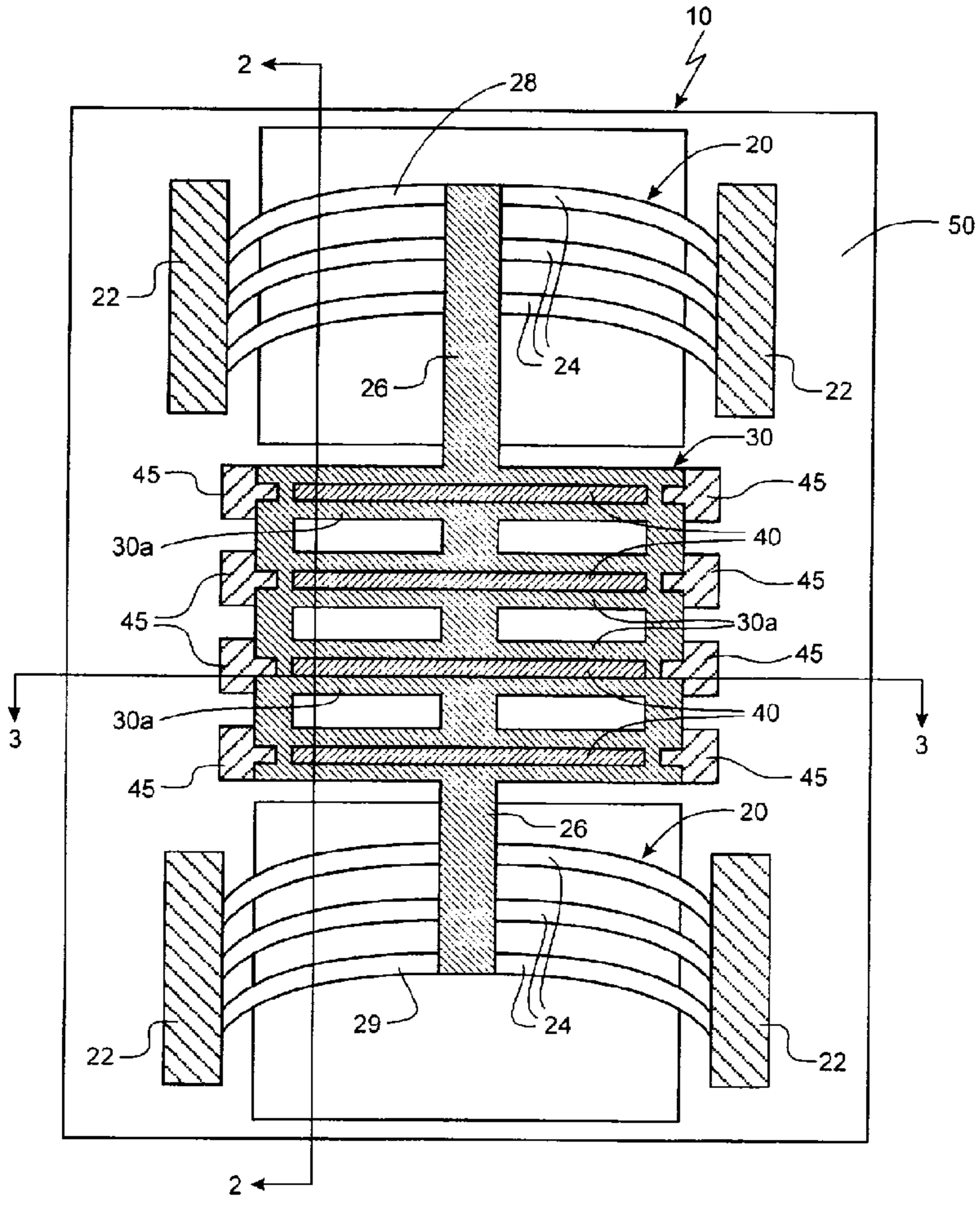
10
2
28
20
50
22
26
24
22
30
45
45
30a
40
45
45
30a
45
30a
40
3
3
45
45
26
20
22
29
24
22
2