# United States Patent [19]

**Maloney**

[11] **Patent Number: Des. 279,486**

[45] **Date of Patent: ** Jul. 2, 1985**


[54] **CONTROLLER FOR A VIDEO GAME OR THE LIKE**


[75] Inventor: **Brian J. Maloney,** St. Charles, Ill.

[73] Assignee: **International Jensen Incorporated,** Schiller Park, Ill.



[**] Term: **14 Years**

[21] Appl. No.: **488,137**

[22] Filed: **Apr. 25, 1983**

[52] **U.S. Cl.** ..... **D21/48**

[58] **Field of Search** ..... D21/48, 13, 1; D13/11, D13/12, 32, 37, 38; 273/DIG. 28, 148 B, 1 GC, 85 G



[56] **References Cited**

U.S. PATENT DOCUMENTS

3,707,093 12/1972 Worden ..... 74/471 XY

OTHER PUBLICATIONS

Vending Times, Jul. 1982, p. 40, "Tron", Control Stick.

Montgomery Ward Xmas Cat., 1977, p. 434, bottom left, "Telstar Combat".



*Primary Examiner*—Melvin B. Feifer

*Attorney, Agent, or Firm*—Willian, Brinks, Olds, Hofer, Gilson & Lione Ltd.


[57] **CLAIM**

The ornamental design for a controller for a video game or the like, substantially as shown.

**DESCRIPTION**

FIG. **1** is a rear perspective view of a controller for video game or the like showing my new design;

FIG. **2** is a top plan view thereof;

FIG. **3** is a left side elevational view thereof;

FIG. **4** is a right side elevational view thereof;

FIG. **5** is a front elevational view thereof;

FIG. **6** is a rear elevational view thereof;

FIG. **7** is a bottom plan view thereof.

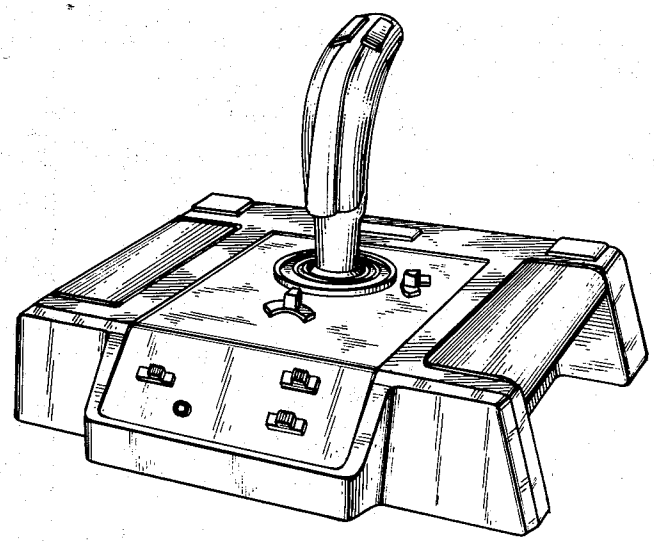

FIG. 1

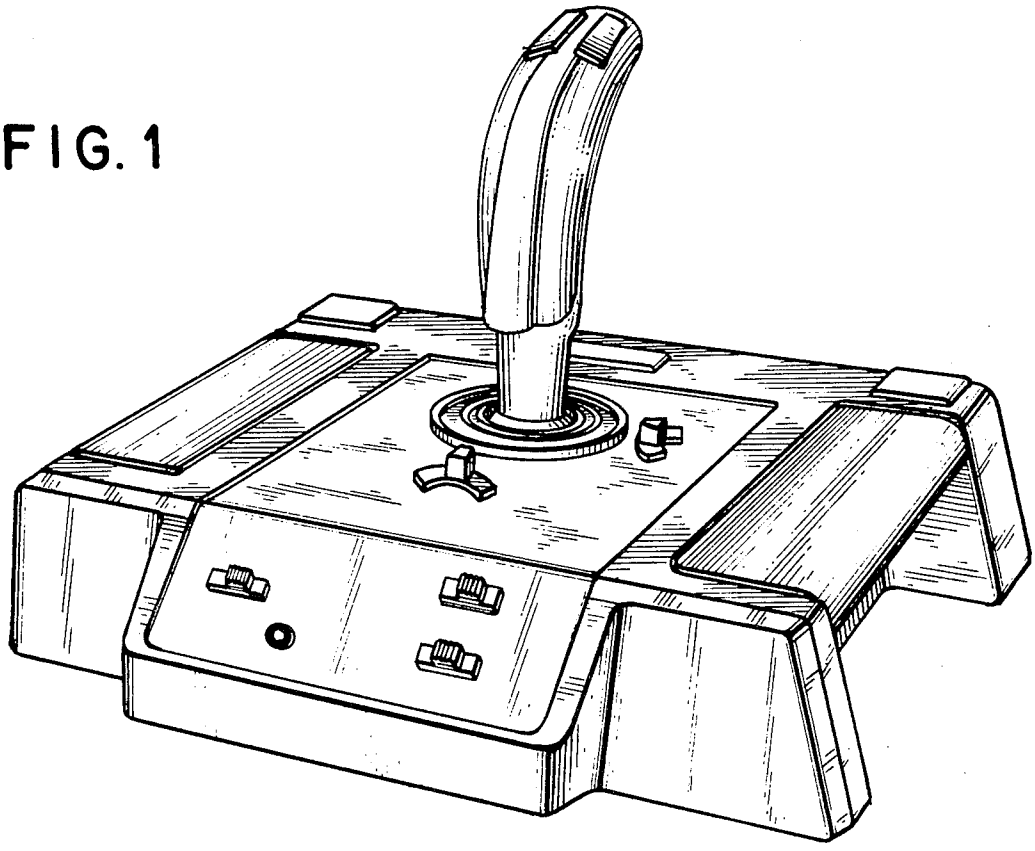

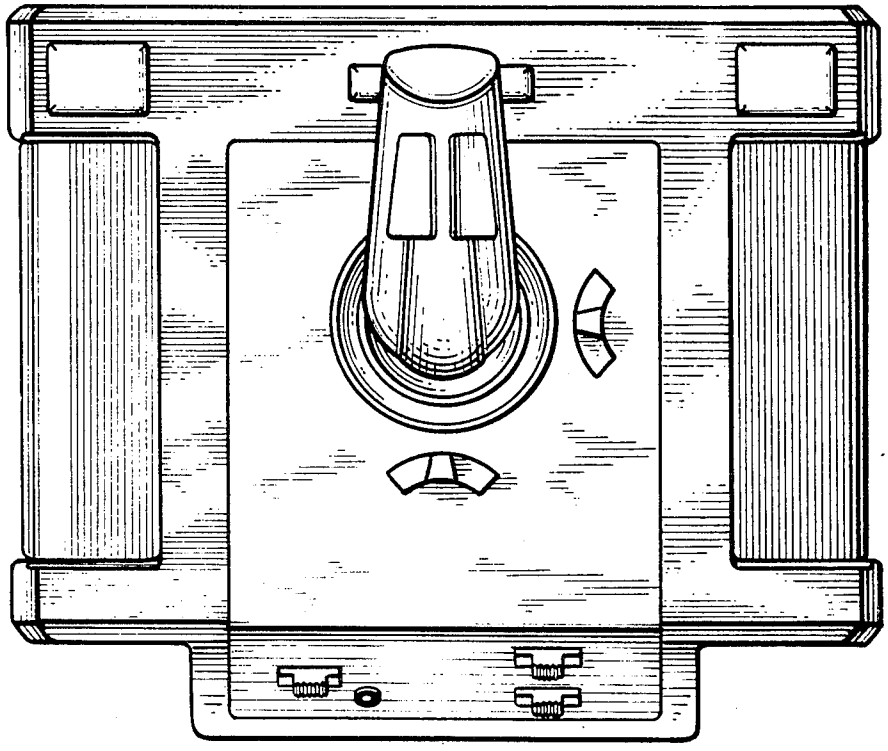

FIG. 2

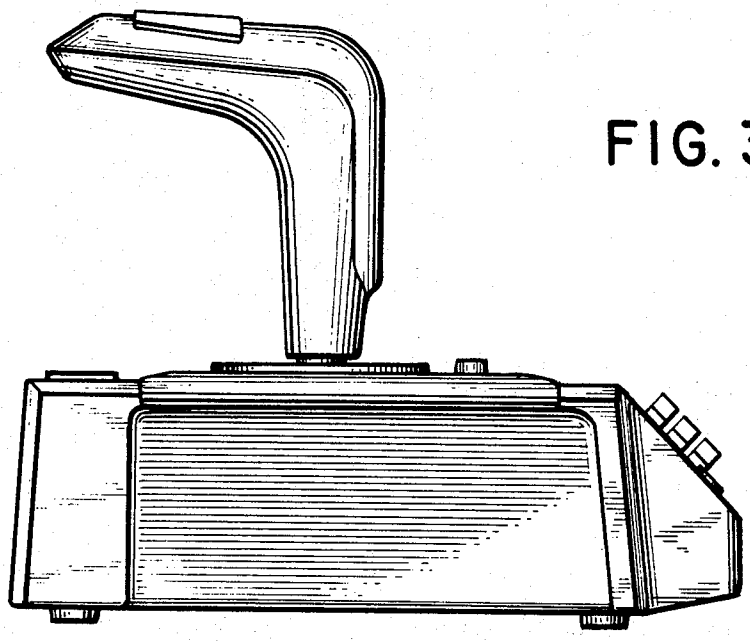

FIG. 3

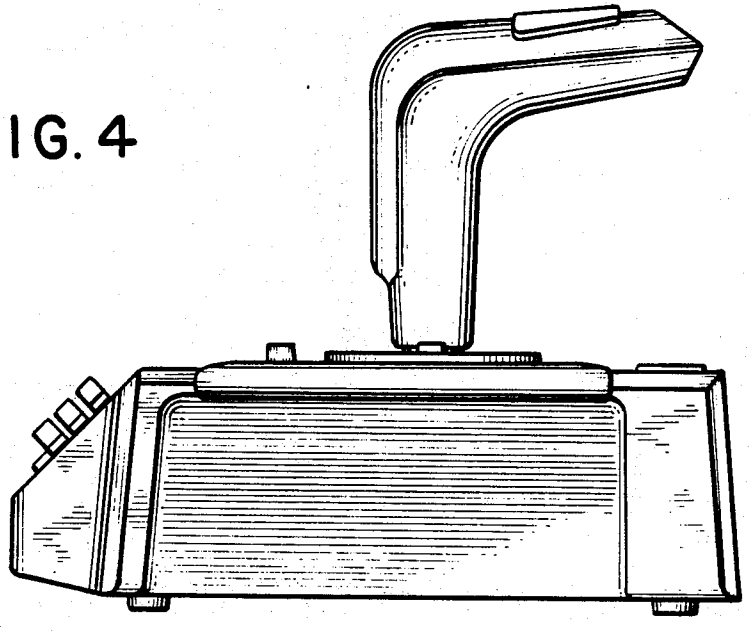

FIG. 4

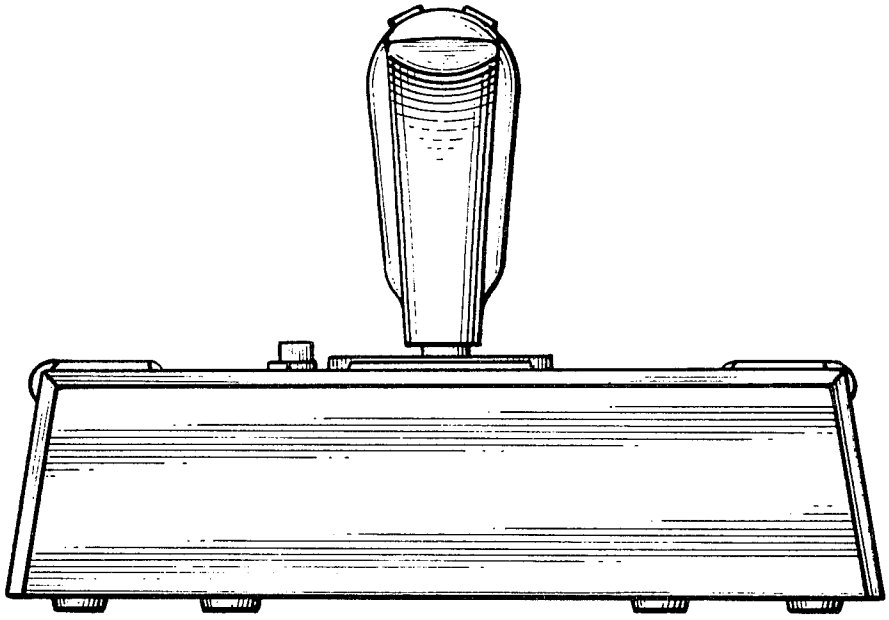

FIG. 5

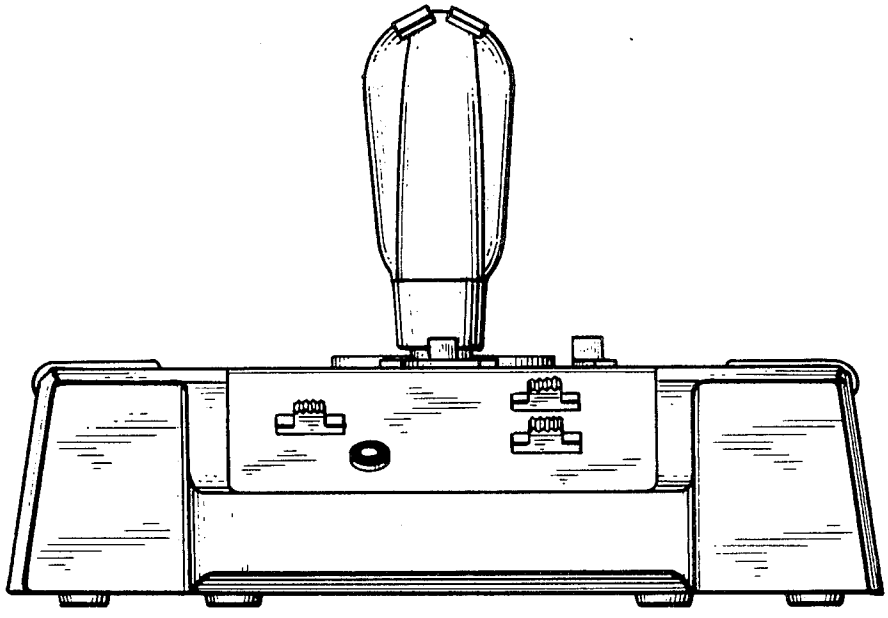

FIG. 6

FIG. 7

