March 13, 1934. E. J. FEELEY ET AL 1,951,088

CRANE SAFETY DEVICE

Filed Dec. 31, 1931 2 Sheets-Sheet 1

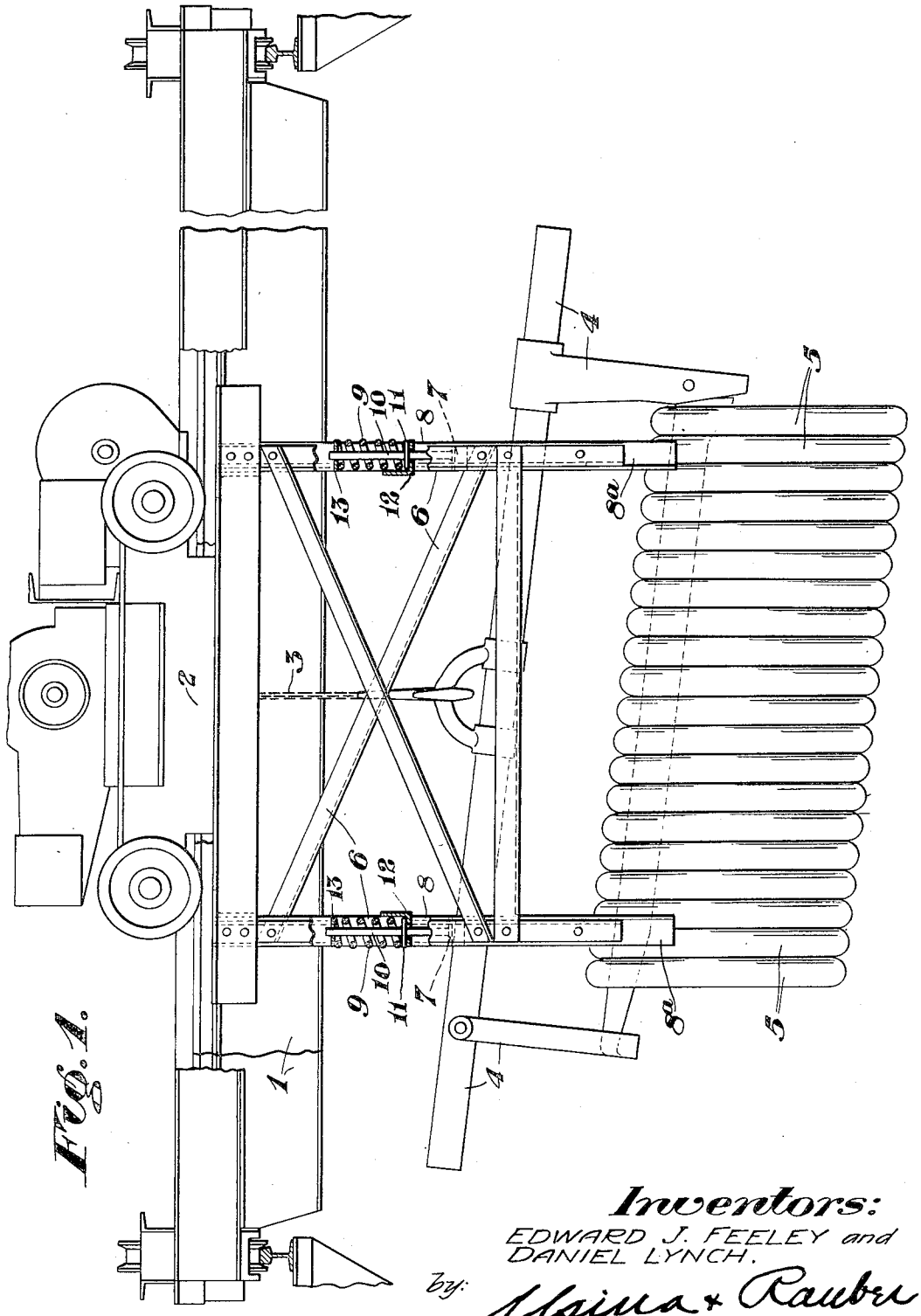

Fig. 1.

Inventors:
EDWARD J. FEELEY and
DANIEL LYNCH.

by: Masius & Raubr
their Attorneys.

March 13, 1934. E. J. FEELEY ET AL 1,951,088

CRANE SAFETY DEVICE

Filed Dec. 31, 1931 2 Sheets-Sheet 2

Fig. 2.

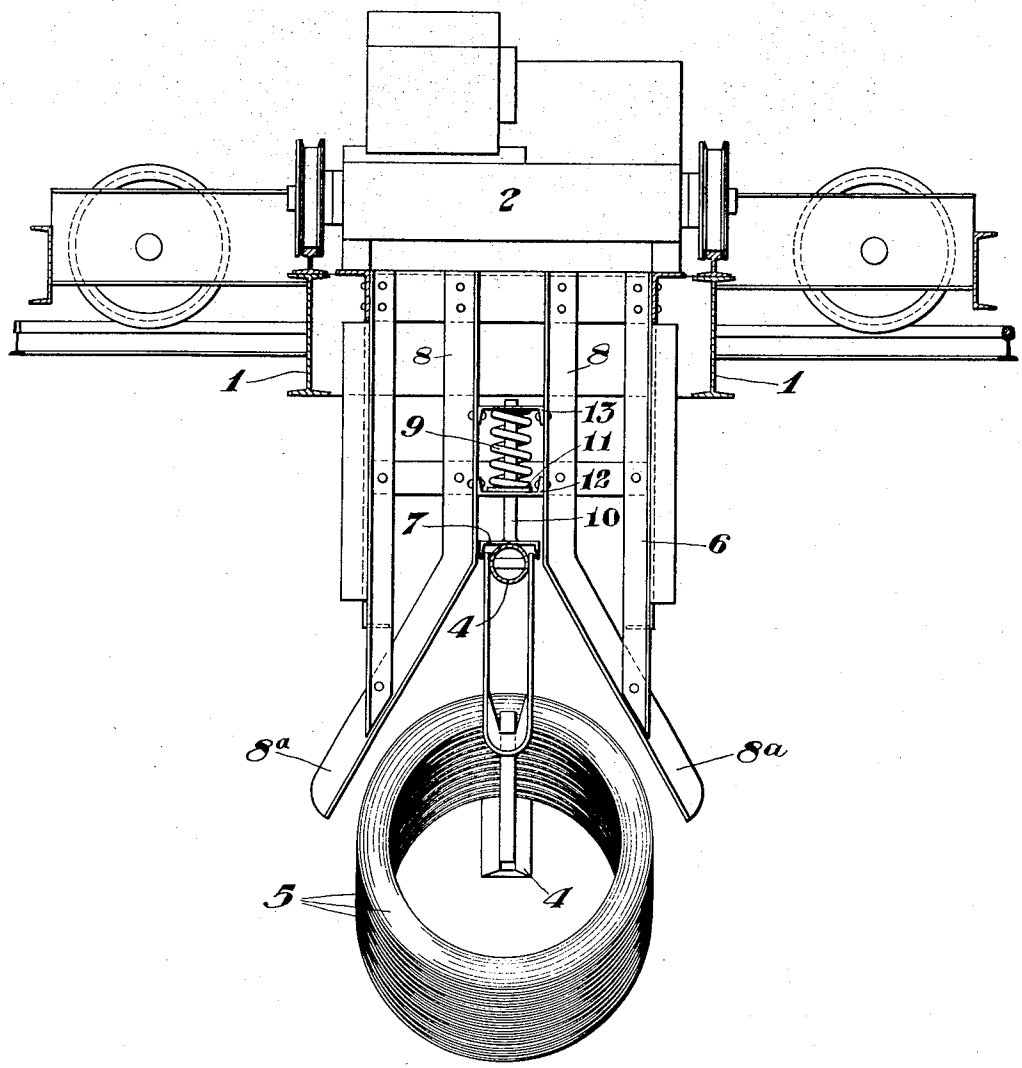

Inventors:

EDWARD J. FEELEY and
DANIEL LYNCH

by: Masina & Rauber

their Attorneys.

Patented Mar. 13, 1934 1,951,088

UNITED STATES PATENT OFFICE

1,951,088

CRANE SAFETY DEVICE

Edward J. Feeley and Daniel Lynch, Joliet, Ill., assignors to The American Steel and Wire Company of New Jersey, a corporation of New Jersey

Application December 31, 1931, Serial No. 584,201

3 Claims. (Cl. 212—77)

This invention relates to a safety device for attachment to traveling cranes, one of the objects being to prevent the accidental unloading of an elongated carrier, being moved by such a crane, when the load on this carrier unexpectedly shifts.

Having reference to the accompanying drawings, Figure 1 is a side elevation of one form of the invention and Figure 2 is an end elevation of Figure 1.

The drawings show a traveling crane consisting of a bridge 1 that can run back and forth, carrying a carriage 2. This carriage lifts through the medium of a cable 3, the load in this instance comprising a long carrier 4 holding bundles of rod 5.

When the crane first started to lift this carrier the bundles were properly placed to balance it in a horizontal position. Now, however, these bundles have unexpectedly shifted to the right, while being moved, causing the carrier to leave its horizontal position. Such a condition is ordinarily quite dangerous because of the possibility of the carrier tilting until the bundles are unloaded. This is prevented by means of a depending frame 6 that is fixed to the carriage 2 so as to move with it, and carries a pair of horizontally alined bumpers 7 equally spaced about the lifting cable 3.

The drawings show the high end of the carrier 4 engaging one of these bumpers and being thus held against further tilting. A pair of vertical guides 8, having outwardly inclined ends 8a, are connected to each end of the depending frame 6. A spring 9 is provided for both pairs of vertical guides 8 and adapted to receive a rod 10, which is connected to each of the bumpers 7. An abutment 11 is secured to each of the rods 10 and adapted to make contact with the outer convolution of the lower ends of the springs 9.

A pair of plates 12 and 13 are mounted on each pair of vertical guides 8 and are suitably apertured to receive the rods 10, the former serving to confine the abutments 11, while the plates 13 restrict the upward movement of the springs 9. It will thus be seen that shock directed to the bumpers 7 will be cushioned through the resiliency of the springs 9.

The invention is particularly useful when objects are to be moved from one end of a shop to another, as it is then that the crane operator draws the object being lifted up nearly to the bridge.

While a specific example of the invention has been shown and described in accordance with the patent statutes, it is to be understood that it is not intended to limit the invention exactly thereto, except as defined by the appended claims.

We claim:

1. In combination with a traveling crane, a crane carriage, a depending frame fixed to said carriage, guide members provided with outwardly inclined ends associated with said frame, and resilient bumpers mounted for movement in said guide members.

2. In combination with a traveling crane, a depending frame fixed to the carriage of said crane, guide members having outwardly inclined ends associated with said frame, spaced plates having rod-receiving holes fixed to said guide members, a rod extending through the holes in said plates, an abutment fixed to said rod, a spring mounted on said rod and in contact with said abutment and one of said plates, and a bumper portion mounted on the outer end of said rod.

3. In combination with a traveling crane, a crane carriage, a depending frame fixed to said carriage, guide members provided with outwardly inclined ends associated with said frame, spaced spring-retaining plates having rod-receiving holes fixed to said guide members, a rod extending through the holes in said plates, an abutment fixed to said rod, a spring mounted on said rod and in contact with said abutment and one of said plates, and a bumper portion mounted on the outer end of said rod and between said guide members.

EDWARD J. FEELEY.
DANIEL LYNCH.