Office de la Propriété Intellectuelle du Canada
Un organisme d'Industrie Canada

Canadian Intellectual Property Office
An agency of Industry Canada

CA 2152781 C 2004/02/24

(11)(21) 2 152 781

(12) BREVET CANADIEN
CANADIAN PATENT

(13) C

(86) Date de dépôt PCT/PCT Filing Date: 1993/12/30
(87) Date publication PCT/PCT Publication Date: 1994/07/21
(45) Date de délivrance/Issue Date: 2004/02/24
(85) Entrée phase nationale/National Entry: 1995/06/27
(86) N° demande PCT/PCT Application No.: US 1993/012697
(87) N° publication PCT/PCT Publication No.: 1994/016512
(30) Priorité/Priority: 1992/12/31 (07/999,210) US

(51) Cl.Int.^{6}/Int.Cl.^{6} H04L 27/22

(72) Inventeur/Inventor:
PETRANOVICH, JAMES E., US

(73) Propriétaire/Owner:
SKYWORKS SOLUTIONS, INC., US

(74) Agent: BORDEN LADNER GERVAIS LLP

(54) Titre : DEMODULATEUR NUMERIQUE A COMMANDE DE FREQUENCE ET DE TEMPS
(54) Title: DIGITAL DEMODULATOR WITH FREQUENCY AND TIMING CONTROL

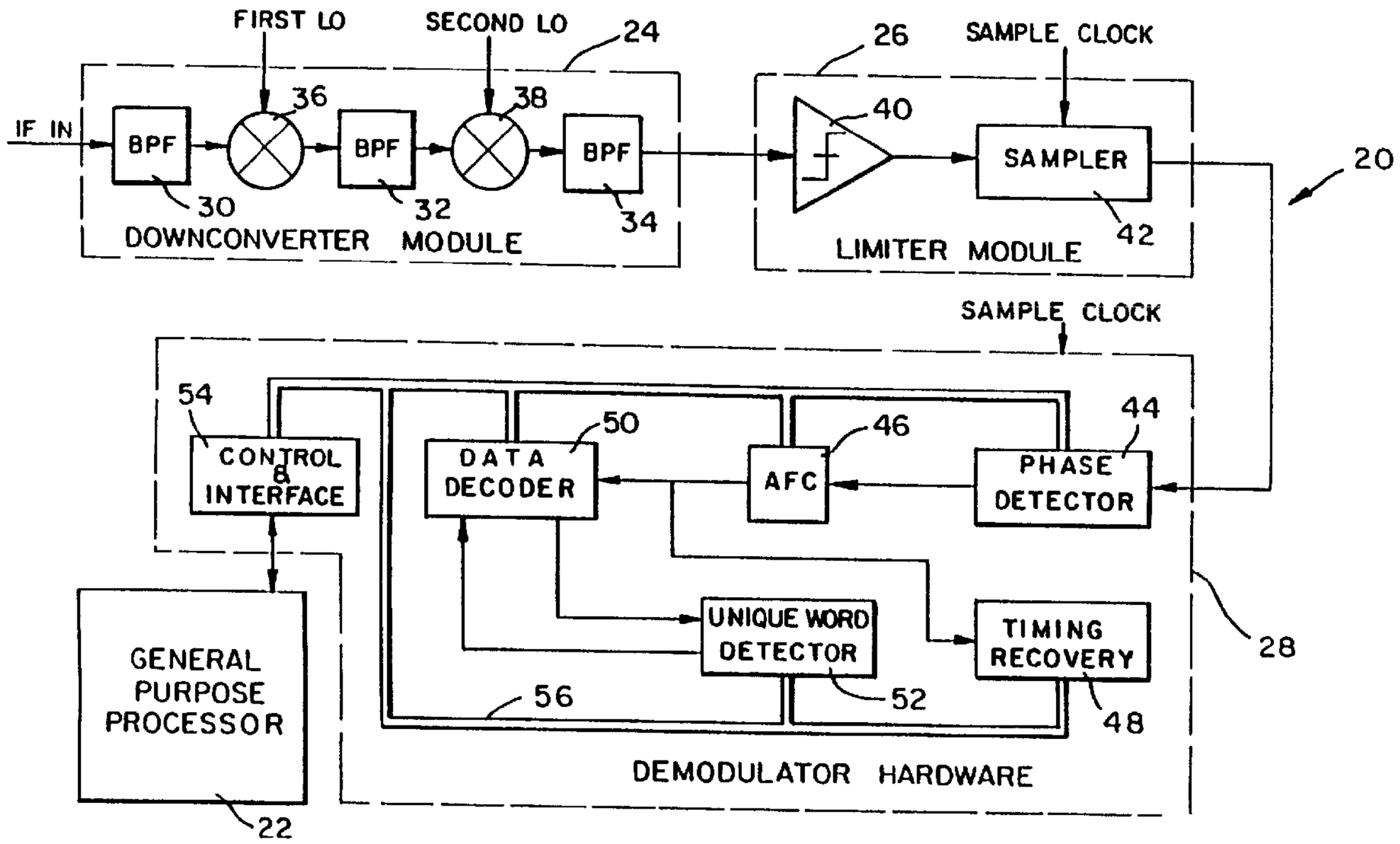

(57) Abrégé/Abstract:
A PSK signal is received and digitized in a limiter (26) to substantially remove the signal's amplitude characteristics. A phase detector (44) receives the digital data and, based upon transitions in the data between high and low states, provides phase estimates. The phase estimates are converted by a data decoder (50) into binary data representing the symbols transmitted to form the PSK signal. A number of overlapping windows of digital data are used to determine phase estimates. A unique word detector (52) receives binary data from the data decoder (50) and, using a correlation technique, identifies one set of windows which substantially maximizes synchronization of the demodulator with the received PSK signal. After the synchronizing window has been identified, an automatic frequency controller (46) monitors any frequency drift of the PSK signal and corrects the phase estimates.

2152781

(57) Abstract

A PSK signal is received and digitized in a limiter (26) to substantially remove the signal's amplitude characteristics. A phase detector (44) receives the digital data and, based upon transitions in the data between high and low states, provides phase estimates. The phase estimates are converted by a data decoder (50) into binary data representing the symbols transmitted to form the PSK signal. A number of overlapping windows of digital data are used to determine phase estimates. A unique word detector (52) receives binary data from the data decoder (50) and, using a correlation technique, identifies one set of windows which substantially maximizes synchronization of the demodulator with the received PSK signal. After the synchronizing window has been identified, an automatic frequency controller (46) monitors any frequency drift of the PSK signal and corrects the phase estimates.

DIGITAL DEMODULATOR WITH FREQUENCY AND TIMING CONTROL

Field of the Invention

The present invention relates generally to the demodulation of digital signals and more particularly to the demodulation of quadature phase shift keyed (QPSK) signals.

Background of the Invention

Presently, the design of commercial cordless telephone systems is based primarily on analog signal processing and transmission techniques. The use of digital techniques in other transmission systems have resulted in improved system performance due to a reduction in signal interference and noise achieved using digital techniques. It is, therefore, desirable to incorporate digital signal processing and digital transmission techniques in the next generation cordless telephones.

Such cordless telephone systems typically include a battery powered portable station (handset) and a base station. The base station is optimally connected to other telecommunication networks. Although the invention may be used in any digital transmission system, its use will be described herein for application in digital cordless telephone (DCT) systems.

Communication channels between the handsets and base stations in DCT systems may be set up using slotted

ALOHA, a well known TDMA (time division multiple access) technique. The DCT system may communicate, for instance, using TDD (time division duplexing) for transferring information between the handsets and the base station. It is typical in such systems to operate in both burst and continuous modes. The burst mode is generally used to broadcast messages and to transmit control information, i,e. to set up a link between the base station and a particular handset. Once all of the control functions have been performed to set up a link, data, i.e. voice data, may be transmitted using a series of continuous bursts, referred to as the continuous mode.

A common form of digital communication employs a digital modulation technique known as Phase Shift Keying (PSK). In PSK, the phase of a carrier signal is switched between two or more values in response to binary data representing the information to be communicated. Where only two transmit phases are provided, each phase represents a single binary digit. For instance, the carrier signal can be switched so that its phase is 180° in response to a binary "1" and switched to 0° in response to a binary "0". This technique is known as phase reversed keying (PRK). The PRK waveform can be written as

$$\phi_1(t) = A \sin(\omega_c t) \quad (1)$$

$$\phi_2(t) = -A \sin(\omega_c t) \quad (2)$$

where ω_c is the angular frequency of the carrier and ϕ_1 and ϕ_2 are the phases of the PRK signal. The PRK waveform according to equations (1) and (2) is shown in Fig. 1.

To increase bandwidth efficiency (the number of bits transmitted per unit of time), a technique known as quadature PSK (QPSK) is used. In QPSK each transmit phase represents two bits of data thereby increasing the amount of data that can be transmitted over each phase interval. The advantage of QPSK modulation is that both the in-phase (I) and the quadature (Q) portions of the carrier signal can be modulated and combined to form the QPSK signal. For instance, Fig. 2a. shows an unmodulated phaser of the carrier

signal. Fig. 2b and Fig. 2c show the modulated carrier of each the I and Q portions of the carrier signal respectively. The QPSK signal can be represented by:

$$\phi 1 = A \cos(\omega_c t) \quad (3)$$

$$\phi 2 = -A \sin(\omega_c t) \quad (4)$$

$$\phi 3 = -A \cos(\omega_c t) \quad (5)$$

$$\phi 4 = A \sin(\omega_c t) \quad (6)$$

The phaser diagram shown in Fig. 2d results from the combination of the I and Q portions of the carrier signal.

Fig. 3 is a block diagram of a prior art coherent QPSK demodulator. As shown, the QPSK carrier signal is received and filtered by bandpass filter 500. Filter 500 rejects undesirable adjacent channel interference and thermal noise. Typically, automatic gain control (AGC) 502 is utilized to adjust the energy level of the received signal. In a TDMA system, large burst-to-burst level differences arising from downlink fading due to atmospheric attenuation, distance and scattering can vary significantly. Thus AGC 502 detects the peak power of the received signal and provides feedback to the receiver so that the receiver's amplifier levels can be adjusted according to the strength of the received signal. Power divider 504 is provided to compensate for the power level difference in the carrier phase and bit timing recovery circuits 506 and 508 respectively.

The carrier phase recovery circuit 506 extracts the I and Q signal components from the received PSK signal. The 90° hybrid circuit 510 is used to separate the I and Q signals. To this end, the I signal is mixed with the cos $(\omega_c t)$ and the Q signal is mixed with the $\sin(\omega_c t)$ by mixers 514 and 512 respectively. Integrators 518 and 516 are used to detect the energy of the down converted signal over each time interval according to a well-known relationship:

$$E=\int_{t1}^{t2}|f(t)|dt \quad (7)$$

where f(t) is the signal (i.e., ideally f(t) = ϕ1, ϕ2, ϕ3 or ϕ4 over the interval t1 to t2) and E is the energy of the signal over the time interval t1 to t2. Since there are two transmit phases for each of the I and Q signals and they are separated by a 180° phase shift, the phase of the signals over a given time interval is either + E or -E as shown in Figure 4.

Figure 4 shows that when the detected energy of the in-phase signal is -E, the probability that the received signal corresponds to transmit phase ϕ2 (equation 4) is greatest and when the detected energy of the in-phase signal is +E the probability that the received signal corresponds to transmit phase ϕ4 (equation 6) is greatest. Similarly, Figure 4 shows that when the detected energy of the quadature signal is -E, the probability that the received signal corresponds to ϕ3 (equation 5) is greatest and when the detected energy of the quadature signal is +E, then the probability that the received signal corresponds to ϕ1 (equation 3) is greatest.

Referring again to Fig. 3, I and Q decision circuits 520 and 522 determine the transmit phase of the received signal and reconstruct the transmit data, i.e. the binary data represented by the phase of the signal. The reconstructed binary data output from the decision circuits 520 and 522 is then combined into a single serial stream of binary data by the parallel-to-serial converter 524.

In most transmission systems, including DCT systems, communication between a receiving unit and a transmitting unit requires burst synchronization. Such synchronization is typically accomplished by providing the demodulated binary data to a correlator which detects a known pattern, such as a predefined preamble. Detection of the preamble or other known pattern allows the demodulator to synchronize its timing with the received PSK signal so that the demodulator can decode the received symbols.

It is well known to fine tune the demodulator's timing to the received symbols during operation in a

continuous mode to optimize system performance and reduce error. Such fine tuning may be provided by the symbol timing recovery circuit 508 shown in Figure 3. A typical symbol timing recovery circuit would determine within which time intervals the maximum amount of energy is received. Those intervals should correspond to the symbol intervals of the received signal. Thus the symbol timing recovery circuit 508 causes the decision circuits 520 and 522 to determine the phase of the received signal so that the decision corresponds to only a single symbol.

It has been found that the analog demodulator of Fig. 3 can be simplified by digitizing the integration and decision functions. Fig. 5 is a block diagram of such a digital demodulator.

After demodulating the received signal using mixer 530, the PSK signal is sampled at a frequency greater than twice the Nyquist frequency, where the Nyquist rate is the highest frequency of the down converted PSK signal. It has been found that by determining the zero-crossings of the signal with respect to time and referencing the zero-crossing to a reference transmit phase, the phase of the received signal can be determined. Waveform digitizer 532 samples the down converter signal represented in Figure 5 generally at 536. The zero-crossing digital signal processor (DSP) 534 estimates the zero-crossings of the sampled waveform and then compares them to those of each of the possible transmit waveforms to determine the phase of the received signal.

However, this technique can become quite complicated due to the iterative curve fitting for trigometric functions which is necessary to determine the phase of the received signal. Furthermore, noise, intersymbol interference, and timing misalignment degrade the received signal so that only a best curve rather than an exact curve can be identified.

To avoid these problems, a phase progression digitizing technique has been suggested. This technique bypasses the waveform digitizer 532 and the complicated zero-

crossing DSP 534 by directly digitizing the signal phase. This technique uses a counter to count each cycle of the received PSK signal, either on up-crossings or on down-crossings. A fixed sample rate is selected to be at least equal to the Nyquist rate of the modulation, i.e. at least twice the symbol rate. Optimally a number of cycles will occur between samples. The samples mark events, i.e., an up-crossing or down-crossing, in time. Thus the phase of the received signal is determined by comparing the time of the events occurring in each symbol period.

For example, consider the phase progression plot shown in Fig. 6. The phase progression plot plots the events as a function of time. The PSK signal is shown below the plot. The samples or events are enumerated as well as the time of each event. The curve fit for determining the phase of each symbol becomes a system of parallel lines where each line corresponds to one of the possible transmit phases. Using this technique all amplitude information is discarded and trigometric curve fitting can be avoided.

Unfortunately, this technique has several limitations as well. In particular, the sampling frequency in such a scheme is critically linked to the signal frequency in that a sample must occur on either upward zero-crossings or downward zero-crossings. Thus, whenever the signal undergoes frequency drift, which is well know to occur in communication systems, or frequency changes for other reasons, the sample rate will require constant adjustment to track such frequency changes.

Accordingly, a need still exists for a digital demodulator which can detect the phase of the received signal regardless of frequency changes and drift of the received PSK signal, which is relatively inexpensive and simple to implement.

Summary of the Invention

The present invention fulfills this need by providing a digital demodulator and a method for demodulating digital data. According to the present invention, the

digital demodulator comprises a phase detector which accepts an input of digital data formed by sampling a received analog PSK signal and converts the digital data into phase estimates based on transitions in the digital data. The phase estimates are then converted to phase data indicative of the transmitted information by a data decoder.

In a preferred embodiment the digital data is grouped into overlapping windows of data. The digital demodulator according to this preferred embodiment comprises a unique word detector, a timing recovery controller, and a frequency controller. The decoded data is output to the unique word detector which correlates the decoded data with a predefined unique word. When the unique word has been detected, the unique word detector outputs a signal indicating within which of the overlapping windows the unique word had been detected.

The frequency controller monitors the phase estimates provided by the data decoder and compares them with the closest of the possible transmit phases to determine a phase error. Since a change in phase error over a symbol interval is indicative of frequency drift, the frequency controller determines a frequency offset from time to time to track the frequency of the received PSK signal.

The timing recovery controller uses the frequency offset to adjust the phase error determined after each symbol period. If the symbol timing of the demodulator was synchronized with the timing of the received symbols, the phase error would approach zero. When the phase error, however, is greater than some predetermined threshold, the timing of the demodulator must be advanced or delayed to synchronize with the timing of the received symbols. The timing recovery controller comprises early and late counters for maintaining a count related to the phase error in an early window and a late window respectively. When the phase error in the early counter is greater than the phase error in the late counter the timing of the demodulator is advanced and when the phase error in the late counter is greater than

the phase error in the early counter the timing of the demodulator is delayed.

In a further preferred embodiment, the phase detector comprises an instantaneous phase decoder, instantaneous phase estimator, and a differential decoder if the transmitted signals are differentially encoded. The instantaneous phase decoder identifies when transitions occur in the digital data. The instantaneous phase estimator estimates, based on when the transitions occur, the instantaneous phase of the received signal and averages a number of instantaneous phase estimates together. The differential decoder computes the phase difference between consecutively received symbols based on the phase estimates corresponding to windows having the same timing.

In still another preferred embodiment, the digital data is formed by limiting the received analog signal and sampling the limited signal thereby removing substantially all amplitude characteristics from the received PSK signal prior to demodulation.

In one aspect, the invention provides in a digital communications system having a transmitter for transmitting information in the form of an analog phase shift keyed (PSK) signal and a receiver for receiving said PSK signal, said PSK signal having amplitude, frequency, and phase characteristics wherein at least some of said phase characteristics are related to the information so transmitted, a demodulator comprising; a phase detector receiving an input of digital data representative of said analog PSK signal so received and providing successive outputs representative of phase estimates of said PSK signal based on transitions in said digital data; and a data decoder having an input coupled to said phase detector to receive an input of said phase estimates, said data decoder converting said phase estimates to phase data indicative of said transmitted information.

In another aspect, the invention provides a method for demodulating a phase shift keyed (PSK) signal having a sequence of symbols, each symbol being based upon one of a known set of possible transmitted phases, said symbols being received in succession by a receiver, comprising the steps of: generating an analog signal indicative of the symbols received by the receiver and defining the analog signal as said PSK signal; digitizing said PSK signal to provide a sequence of digital data samples representative of said PSK signal received, each digital data sample having a value associated with one of a high level and a low level; identifying transitions from said high level to said low level and from said low level to said high level between successive digital data samples; generating a phase estimate based on said transitions so identified; and decoding each phase estimate to provide binary data representative of said symbols received and defining said data as decoded data.

Brief Description Of The Drawings

The present invention will be better understood, and its numerous objects and advantages will become apparent by reference to the following detailed description of the invention when taken in conjunction with the following drawings, in which:

Figure 1 graphically represents a PRK waveform;

Figure 2 shows a phaser diagram of a QPSK signal;

Figure 3 is a block diagram of a QPSK demodulator according to the prior art;

Figure 4 shows energy detection envelopes of QPSK symbols;

Figure 5 is a block diagram of a prior art digital PSK demodulator;

Figure 6 is a phase progression plot of a PSK waveform;

Figure 7 is a block diagram of a digital demodulator according to the present invention;

Figure 8 shows the signal input to and signal output from a limiter amplifier;

Figure 9 is an example of a window/symbol timing using four windows per symbol period;

Figure 10 is a timing diagram showing a desired timing adjustment for fine tuning demodulator synchronization;

Figure 11 is a block diagram of a preferred embodiment of a phase detector according to the present invention;

Figure 12 is a block diagram of a preferred embodiment of an instantaneous phase decoder;

Figure 13 is a block diagram of a preferred embodiment of an instantaneous phase estimator according to the present invention;

Figure 14 is a block diagram of a preferred embodiment of a differential phase detector according to the present invention;

Figure 15 is a block diagram of a preferred implementation of the instantaneous phase estimator, differential detector and data decoder according to the present invention;

Figure 16 graphically depicts a symbol phase shift of nearly 360° with reference to a synchronizing window according to the present invention;

Figure 17 shows an exemplary sequence of digital data and denotes transitions occurring within that sequence;

Figure 18 graphically depicts quadrant and octant mapping for a $\pi/4$ QPSK signal according to the present invention;

Figure 19 is a block diagram of a preferred embodiment of an automatic frequency controller according to the present invention;

Figure 20 is a block diagram of a preferred implementation of the automatic frequency controller according to the present invention;

Figure 21 is a block diagram of a preferred embodiment of an automatic timing recovery controller according to the present invention;

Figure 22A is a flowchart of the AFC and ATRC software routine according to the present invention;

Figure 22B is a flowchart of the ATRC software routine according to the present invention; and

Figure 23 is a block diagram of a preferred embodiment of a unique word detector according to the present invention.

Detailed Description

Fig. 7 shows a block diagram of a portion of a radio frequency (RF) receiver/signal processor, generally designated 20, including a digital demodulator constructed in accordance with the present invention. Such a receiver has the advantages of low cost, low complexity and low power consumption. The overall function of the receiver is to recover digital data from an analog input signal (IF IN) and pass such digital data to a central processor 22. IF IN, in the preferred embodiment, is a $\pi/4$ differential coded quaternary phase shift keyed (DQPSK) signal in analog form. IF IN is an analog transmission representative of various phase represented symbols. IF IN is transmitted at a given symbol rate. Each phase symbol is representative of a set of digital data, i.e., a particular bit sequence. Although the arrangement shown in Fig. 7 is a combination analog/digital device, it is susceptible to an integrated circuit implementation.

Receiver 20 is shown to generally include a down converter module 24, a limiter module 26 and a demodulator module 28. Down converter 24 serves to down convert IF IN from a received frequency of approximately 250 MHz to a low IF signal of approximately 1.152 MHz. Limiter 26 serves to both limit the low IF signal or down converted signal and

sample the signal at a sample rate which is at least the Nyquist rate of the down converted signal.

Demodulator module 28 recovers a differential phase signal from the samples generated by limiter 26. Such recovery occurs by removing frequency and phase error to optimize the detection of phase information from the differential phase signal. Once differential phase information is recovered from the down converted signal, phase symbols can be determined and converted into actual digital data output to processor 22.

Down converter module 24 is shown to include bandpass filters 30, 32 and 34 and mixers 36 and 38. Filter 30 eliminates out-of-band signals, including spurious mixing images and other channel transmissions, if any, reduces noise, and shapes the desired signal. Filter 30 exhibits a response roughly approximating an optimal "matched" filter to a filter used prior to transmission.

It will be appreciated that the down conversion of IF IN is achieved by passing the signal through mixers 36 and 38. Although the actual frequencies selected for the first and second signals applied to mixers 36 and 38, respectively, can be any frequency which will achieve the necessary down conversion, certain frequencies are preferred because of their non-interference characteristics. A more detailed explanation of the frequencies selected and the considerations relating to such selection may be found in U.S. 5,722,040. In the preferred embodiment mixer 36 down converts IF IN to approximately 10.7 MHz.

Filter 32 generally performs the same function as filter 30, namely image rejection, noise rejection and signal shaping. Mixer 38 provides the final down conversion of IF IN to approximately 1.152 MHz. Filter 34 is a discrete inductor-capacitor (LC) filter which primarily eliminates mixing products occurring during the down conversion process.

The primary function of limiter 26 is to convert the down converted and filtered IF IN analog signal, output from filter 34, into a digital signal without the use of an analog-to-digital converter. The digital signal generated by limiter 26 is thereafter provided to demodulator module 28 for further processing.

As shown in Fig. 7, limiter 26 includes amplifier 40 and sampler 42. In a preferred embodiment amplifier 40 is a high gain amplifier such that any positive input will generate an output having an upper limit, and any negative input will generate an output having a lower limit. Amplifier 40 converts the down converted signal to a discrete signal having a value of A for all positive analog input and a value of B for all negative analog input. An example of the output of amplifier 40 is shown in Fig. 8.

Sampler 42 samples the discrete signal output from amplifier 40 thereby providing a digital output signal. Preferably, the sample rate and the period of IF IN in limiter 26 are relatively prime integral digital multiples of the symbol period. It is also preferred for the sample rate to be relatively close to the frequency of IF IN at this point, (although the sampling rate must be at least the Nyquist rate of the down converted signal). In a preferred embodiment the sampling rate is approximately 19.2 MHz. It is noted that the digital signal generated by limiter 26 does not contain any information pertaining to the amplitude of the IF IN signal (i.e., the magnitude of the received DQPSK signal). Since the digital output represents when down converted signal transitions from positive to negative and negative to positive (zero crossing), information related to the phase and frequency of the down converted signal can be determined by demodulator 28, thereby permitting recovery of the originally transmitted phase symbols which in turn permits recovery of the original digital data.

As shown in Fig. 7, demodulator 28 includes phase detector 44, automatic frequency controller (AFC) 46, automatic timing recovery controller (ATRC) 48, data decoder

50, unique word detector 52, and interface controller 54. Processor 22 is coupled to demodulator module 28 via the interface controller 54.

Phase detector 44 analyzes the digital signal output from limiter 26 to generate estimates of the instantaneous phase of IF IN during one or more time intervals. The time intervals are optimally synchronized with the symbol intervals of the received PSK signal where the symbol rate is preferably 192 Ksps (thousands of symbols per second). AFC 46 functions to generate frequency data based on the instantaneous phase estimates, which frequency data is provided to processor 22 via data bus 56. The frequency data is used by processor 22 to determine the frequency offset, i.e., the frequency error of IF IN, and correct the phase of the instantaneous phase estimates generated by phase detector 44. Correction of the phase estimates by processor 22 is based on the frequency offset.

Corrected phase estimates generated by processor 22 are provided as an input to ATRC 48 and data decoder 50. Data decoder 50 converts correct phase information into symbols representing the bit sequence of the transmitted digital data and provides a binary output to unique word detector 52. In a preferred embodiment, demodulator 28 is capable of operating in at least two modes, a burst mode and a continuous mode. In such an embodiment, phase detector 44 provides phase estimates at N times the symbol rate, where N is an integer 1, 2, 3,... . Phase detector 44 provides a phase estimate over a predetermined number of samples, defining a "window," where N different windows occur at the symbol rate, i.e., within a symbol period or interval. It is especially preferred for phase detector 44 to define N overlapping windows for each symbol interval. In such an embodiment, detector 44 computes an average phase for each window resulting in the provision of N average phase estimates per symbol period.

Fig. 9 graphically depicts the overlapping windows per symbol interval concept. In this depiction four windows

have been defined per symbol interval. Each window has a duration of 1/2 symbol interval. Consequently a phase estimate is computed every 1/4 of a symbol interval. Four symbol intervals are shown, t_0 to t_1, t_1 to t_2, t_2 to t_3, and t_3 to t_4. One symbol ϕ_0, ϕ_1, ϕ_2 or ϕ_3 is transmitted during each symbol interval, respectively. Sets of windows W_A, W_B, W_C and W_D are shown overlapping (hereinafter reference to a set of windows means, all the windows having the timing of one of the windows W_A, W_B, W_C or W_D.

To synchronize timing of demodulator 28 with IF IN, the received signal, demodulator 28 determines which of the N windows in each symbol interval is most centrally positioned, i.e., W_A in Fig. 9. This window is referred to as the synchronizing window. In the burst mode, unique word detector 52 detects the most centered of the N windows and timing adjustment are made in relation to the selected window. In the continuous mode, the timing and frequency data generated by ATRC 50 and the AFC 46 are used to adjust the phase error and adjust the timing, i.e. the timing and frequency data are used to make adjustments to the synchronizing window by delaying or advancing the samples of that window.

Fig. 10 depicts synchronization in the continuous mode. Window W_A is shown to be nearly centered in a given symbol interval. This window would be selected as the synchronizing window, however, since it is desirable to center the synchronizing window, fine adjustments are made. Centering the synchronizing window has the advantage of eliminating intersymbol interference. To substantially center window W_A it must be delayed 2 samples as shown by the dashed line $W_{A'}$.

It will be appreciated from the above that the data format employed in IF IN will preferably utilize a unique word or preamble prior to any data fields. In the data recovery process of demodulator 28, the unique word or preamble utilized will be stored in processor 22. This unique word will be provided by processor 22 to unique word

detector 52. Data decoder 50 accumulates a predetermined number of bits corresponding to the unique word and provides this accumulation of bits to unique word detector 52. Unique word detector 52 then correlates the accumulated sequence of bits to the unique word. Based on the results of the correlation, unique word detector 52 will transmit a detect signal to processor 22 and identify the synchronizing windows.

The ATRC 48 uses the corrected phase estimates from the AFC 46 to generate timing data and provides this timing data to the processor 22. The processor 22 uses the timing data to adjust the timing of the phase estimates provided by the phase detector 44 by delaying or advancing the digital samples with respect to the phase estimates, i.e., advancing or delaying the synchronizing window.

Consider now the components of demodulator 28 in greater detail. It will be recalled that the digital signal generated by the limiter 26, i.e. a signal composed of two values either level A or level B, is provided to phase detector 44. A preferred embodiment of phase detector 44 is shown in Fig. 11. Phase detector 44 comprises an instantaneous phase decoder 58 and an instantaneous phase estimator 60. If differentially coded phase shift keying (DPSK) is used for generating the transmit signal, phase detector 44 should also include a differential detector 62.

Phase decoder 58 receives an input of digital samples from limiter module 26 in Fig. 7 and compares each digital sample with the most previous sample. For example, assume that the value A is "1" and the value "B" is "0". The input to the phase decoder 58 will be a sequence of "1"s and "0"s. Since there are only two possible values for the input, there can be only four possible combinations of consecutive digital data (i.e., 00, 01, 10, 11). Phase decoder 58 functions to provide an output indicative of whether there is a change in the consecutive values of the signal received from limiter 26 and if a change has occurred to identify that change in the data. In a preferred

embodiment, phase decoder 58 operates according to the truth table listed in Table 1, below.

TABLE 1

input	output
00	0
01	+1
10	-1
11	0

It should be readily understood that other decoding schemes could be used to provide the same information.

A preferred embodiment of the instantaneous phase decoder 58 is shown in Fig. 12. A sample delay 64, which could comprise a simple register or buffer, serves to store each sample until the next sample is received from the limiter module. When the next sample is received the value of the stored sample is subtracted from the value of the next sample by subtractor 66. Thus when consecutive samples are the same, the decoded output is a "0". When the next sample changes from low to high the decoded output is a "+1" and from high to low the decoded output is a "-1" as indicated in Table 1.

In a preferred embodiment, the output of decoder 58 will comprise two bits, B_0 and B_1 representative of the information shown in Table 2. Thus, B_0 will indicate whether a transition occurred between the two most previous samples and B_1 will indicate what the transition was if one occurred.

TABLE 2

Bit	Digital Value	Explanation
B_0	1	transition
B_0	0	no transition
B_1	1	low to high
B_1	0	high to low

A

Instantaneous phase estimator 60 uses the output of phase decoder 58 to determine the instantaneous phase of the received signal. Fig. 13 is a functional block diagram of the instantaneous phase estimator 60. The output of phase decoder 58 is processed by first determining the absolute value which is extracted at ABS block 68. When the decoded output indicates that there has been a transition, i.e. B_0=1, block 70 provides an output of "0" when the edge is rising, i.e., B_1=1, and provides an output of "π" when the edge is falling, i.e., B_1=0.

As described above, traditional PSK demodulators will detect zero-crossings of the received PSK signal and determine whether the signal is rising or falling at each zero-crossing. The zero-crossing locations are compared with those of a reference signal having the same frequency as the received PSK signal. To eliminate the use of a reference signal and the associated complex and costly hardware required to produce the signal, a phase ramp generator 72 is used to provide an instantaneous phase estimate as a function of time.

Phase ramp generator 72 provides a ramp signal having a period equivalent to the length of the window interval. For each set of consecutive samples, the output of block 70 , i.e., the value "0" or "π", is added to the current value of the ramp signal by adder 72 depending upon whether the edge of the limiter signal is rising or falling, respectively. The resulting sum is the instantaneous phase estimate. When a transition occurs between two consecutive samples, ABS block 68 provides an output of "1". When there is no transition between two consecutive samples, i.e. B_0=0, ABS block 68 provides a "0". The output of ABS block 68 is multiplied in multiplier 74 by the output of adder 73, i.e., the instantaneous phase estimate. In this manner, the output from the phase estimator is effectively cancelled when there has been no transition.

Each instantaneous phase estimate is provided from multiplier 74 to averager 76. Averager 76 has a timing input

2152781

78, SYMBOL TIMING signal, which is used by averager 76 to accumulate the instantaneous phase estimates over each predetermined window interval and provide an averaged phase estimate for each window interval. The SYMBOL TIMING signal 78 is generated by processor 22 and provides a signal having a clock rate equal to the symbol rate.

If the transmitted signal is differentially encoded, then phase detector 44 will preferably include a differential detector 62. A block diagram of differential detector 62 is shown in Fig. 14. It is assumed that four overlapping windows are used per symbol period or interval as shown in Fig. 9. Each average phase estimate output from averager 76 is subtracted from the 4th subsequent average phase estimate by subtractor 80 to determine the average differential phase shift from consecutive corresponding windows.

In other words, an average phase estimate is determined over each of the windows W_A, W_B, W_C, and W_D during each symbol interval. The average phase estimate generated for window W_A during the time interval t_0 to t_1 is delayed by symbol delay block 82 shown in Fig. 14 until the average phase estimate generated during the interval t_1 to t_2 is provided by averager 76. The average phase estimate from the interval t_0 to t_1 is then subtracted from the average estimate from interval t_1 to t_2 by t_3 subtractor 80, resulting in an average differential phase between the symbols ϕ_0 and ϕ_1. The symbol delay block 82, therefore, must store the averaged estimates, for example in a series of storage registers, for each of the 4 windows and provide an output for each averaged estimate so that it is subtracted with the next average estimate of the corresponding window, i.e., in this example the subsequent 4th window.

Since in QPSK, the symbols are selected such that one symbol corresponds to a phase between 0° and 90°, a second corresponds to a phase between 90° and 180°, a third corresponds to a phase between 180° and 270°, and the fourth corresponds to a phase between 270° and 360°, the

instantaneous phase estimator 60, differential detector 62 and data decoder 50 are preferably implemented as shown in Fig. 15.

Phase counter 84 is initialized to zero substantially at the beginning of each window period by a window start signal, i.e., counter 84 repetitively counts over each quarter symbol interval. Phase counter 84 is incremented on each clock signal f_s which corresponds preferably to the sampling rate of limiter 26.

Processor 86 is adapted to function as an edge counter for counting out five edges. While the edge count is less than or equal to five, processor 86 provides a logic high output to AND gate 88. Each time a transition is detected, i.e., B_0=1, the output of the AND gate 88 will become logic high thereby enabling accumulator 90. When the edge count exceeds five, the output of processor 86 to AND gate 88 will become logic low thereby disabling accumulator 90. Accordingly, each time an edge is detected as indicated by the DETECT signal, i.e., bit B_0 of output of phase decoder 58, accumulator 90 inputs the current value of the phase counter 84 and accumulates these values until five edges have been detected by processor 86, whereupon accumulator 90 is disabled.

It is noted that if the frequency of the baseband signal was such that only five transitions could occur during one fourth of a window interval, processor 86 and gate 88 would not be required to enable/disable accumulator 90 because the contents of the accumulator could be output at the beginning of each quarter symbol interval.

The accumulated counter values are preferably output to delay member 92 and to adder 94. The accumulation of counter values for every two consecutive 1/4 symbol periods are added by adder 94 resulting in a phase value for each window.

When DPSK is used, each phase value is subtracted from the next phase value corresponding to the same window (e.g., W_A, W_B, W_C or W_D). Accordingly, the difference between

any two phase values should not exceed a number corresponding to 360°. Such an operation is effectively achieved by differential decoder 96 and format converter 98. Differential decoder 96 generates an average differential estimate and format converter 98 converts the average differential estimates into a data format representative of the quadrant of the differential phase, the sign of any error and the amount of any error. In order to more fully appreciate the operation of differential decoder 96 and converter 98, certain phase shift events associated with demodulator 28 need be considered.

The range of accumulator 90 for a full 360° phase shift was computed by examining the maximum difference in accumulations that result in the same phase estimate. As shown by the top waveform in Fig. 16, a first detected edge rises exactly on count zero of the given window period. This particular detection will provide an accumulation sum of eighty two (0+8+16+25+33 provided by counter 84) in accumulator 90. If the rising edge occurs an infinitesimal time before count zero, as shown in the lower waveform, the first detected edge falls on count 8 of counter 84 and gives an accumulation sum of one hundred twenty three (8+16+25+33+42). To make these accumulation sums equal, an offset of forty two (42) needs to be added to the first sum. In the context of the preferred embodiment, such an offset corresponds to adding a phase shift of π radians. Therefore, a 2π or 360° phase shift is eighty four (84) counts apart. Consequently, the accumulated counter values in accumulator 90 can be used to generate information indicating what phase quadrant the received PSK signal falls within and the amount of error, if any, associated with the received PSK signal.

For example, consider the sequence of digital data shown in Fig. 17 and assume that counter 84 is counting at the sampling rate of sampler 42, i.e., the pulse rate of clock f_s equals the sampling rate. If this data is output from limiter module 26 and the first bit corresponds to a window boundary, five transitions occur at counter values of

3, 11, 20, 28, and 36, respectively. The sum of these five numbers is ninety eight (98). Assume that this data corresponds to the symbol ϕ_1 and the timing of window W_A in Fig. 9 and that the same data would result during the next 1/4 symbol interval (i.e., the first half of W_C). In view of these assumptions, adder 94 would then add together the accumulated counter values for both 1/4 symbol intervals to arrive at an average phase estimate of one hundred and ninety six (196).

Differential decoder 96 (Fig. 15) would then subtract one hundred ninety six (196) from the average phase estimate of previous symbol ϕ_0 corresponding to the timing of W_A. If the average phase estimate for ϕ_0 corresponding to W_A was two hundred eighty (280), then the difference between symbols ϕ_0 and ϕ_1 would be eighty four or 2π. Since the sampling rate of sampler 42 is preferably 19.2 Mhz, there are approximately 16.67 samples per cycle of a 1.152 Mhz baseband data signal and since accumulator 90 is disabled every five (5) transitions, ten (10) transitions (5 from each half window) would require approximately eighty four (84) samples. Thus phase counter 84 must be incremented from 0 to 41 each half window period.

Since each average phase estimate is subtracted from the most previous average phase estimate corresponding to the same set of windows, it should not be necessary to add π for each falling edge, i.e. when B_1 is 0, as described previously. If the first edge is rising, then the sequence of edges will be rising, falling, rising, falling, rising. Theoretically, π should be added only two times, once for each falling edge. If the first edge is falling, then the sequence of five edges will be falling, rising, falling, rising, falling, and 3π should be added to the accumulated counter values. Since these are the only scenarios for five consecutive edges, at least 2π will be cancelled when one accumulated value is subtracted from a previous one by differential decoder 96. Consequently, it is not necessary to add π for each falling edge.

However, where one accumulated counter value corresponds to a transition sequence having a falling first edge first and the other accumulated counter value corresponds to a transition sequence having a rising first edge, the difference between the two accumulated counter values will contain a constant bias of π. Thus, in a preferred implementation, a value of forty two (42), corresponding to π, is added to the average phase estimate, if the corresponding transition sequence begins with a falling edge. This feature, may be implemented as shown in Fig, 15, by processor 86 providing an output of forty two (42) to adder 94 in the event that the first detected transition is a falling edge.

The difference between average phase estimates corresponding to consecutive windows in a set of windows is used to determine the phase quadrant of the PSK signal from one symbol to the next. The quadrants may be defined according to Table 3 below.

TABLE 3

Diff $\phi_{n+1}-\phi_n$	Quadrant #	Symbol
0-20	1	00
21-41	2	01
42-62	3	11
63-83	4	10

Therefore, if the difference between the average phase estimates for symbols ϕ_1 and ϕ_0 corresponding to window W_A is twenty four (24), then the average differential phase represented by ϕ_1 would be in the second quadrant, i.e. the bit sequence "01".

In a further preferred embodiment, the phase of the transmitted signal is centrally positioned in each quadrant, i.e., at **10**, **31**, **52** and **73**. Thus a differential phase of twenty four (24) is seven (7) below the second quadrant phase value. In this embodiment format converter 98 can convert

the average differential estimates into a data format representative of the quadrant of the differential phase, the sign of the error and the amount of the error.

The quadrant and octant (i.e. sign of the error) are depicted graphically in Fig. 18. The quadrants have been subdivided into octants. For example, where the average differential phase estimate is twenty four (24) as in the example described above, the output of format converter 98 would be 0110111. The first two bits "01" indicating the second quadrant. The third bit "1" indicates that the error is within the first octant of the second quadrant as shown in Fig. 18 and the four remaining bits "0111" indicate that the error is seven (7) or approximately 30°. In the preferred embodiment, each count represents approximately 4.3°.

In a further preferred embodiment processor 86 computes the difference between the counter values corresponding to the third and fourth detected edges. The computed difference and the counter value corresponding to the fourth edge are stored in the memory of processor 86. If a fifth edge is not detected by the edge counter portion of processor 86 at or before count eighty four (84), the computed difference is added to the fourth counter value and this interpolated value is provided to adder 94. Therefore, if the fifth edge is not detected, then the phase estimator can interpolate for that edge to generate an average phase estimate.

As indicated in Fig. 7 the average phase estimate or average differential phase estimates are output from the phase detector 44 to AFC 46. A detailed block diagram of AFC 46 is shown in Figure 19. AFC 46 includes both hardware designated generally as 100 and software designated generally as 102. Preferably, AFC software 102 will reside in processor 22. As described previously, the frequency data generated by AFC 46 is processed by and stored in processor 22 during each time period when the receiver 20 is operating in a continuous mode and after the unique word has been detected. Processor 22 uses this data to determine the

frequency error (frequency offset) of the output of limiter module 26 during each window interval.

The frequency offset is stored by AFC software 102 at correction frequency store 104 and is added by adder 106 to each average or differential phase estimate provided by phase detector 44. This addition results in a corrected phase and will be described in more detail below. The corrected phase is provided as an input to ATRC 48 and data decoder 50.

The corrected phase is also provided to phase error detection circuit 108. A symbol timing input is provided by processor 22 to phase error detection circuit 108. The symbol timing is used to select those corrected phase inputs that correspond to the synchronizing window identified by unique word detector 52 after detecting the unique word, e.g. those corrected phase inputs corresponding to window W_A.

Phase error detector 108 stores the corrected phase of the selected window and compares each phase to the possible transmitted symbols. For instance in a $\pi/4$ QPSK modulation system, the set of transmitted symbols may include 45°, 135°, 225°, and 315°. Thus if the corrected phase of the selected window is 35°, phase error detector 108 would identify the 45° transmit phase as the closest phase and calculate the difference to be -10°.

Positive and negative threshold detectors 110 and 112 determine whether the calculated difference between the corrected phase and the selected transmit phase is greater than a predetermined positive threshold or less than a predetermined negative threshold, respectively. In the preferred embodiment, the threshold for each detector 110 and 112 is 2 and -2, respectively and correspond to roughly ± 8.6°. If the phase error is greater than the positive threshold, then positive counter 114 is incremented. If the phase error is less than the negative threshold, then the negative counter 116 is incremented. At the end of each slot, (in the preferred embodiment each burst includes five

(5) slots) the contents of counters 114 and 116 are output to AFC software 102 for processing.

Since frequency is related to phase by the following relationship:

$$f(t) = d\phi(t)/dt \qquad (8)$$

where $f(t)$ is a function of the frequency of the PSK signal and $\phi(t)$ is a function of the phase of the PSK signal. Then the frequency error can be determined by the following equation:

$$\Delta f = \frac{\phi_e(t_{n+1}) - \phi_e(t_n)}{t_{n+1} - t_n}$$

where $t_{n+1} - t_n$ is the slot period, Δf is the frequency offset during that interval, and $\phi_e(t_n)$ is the phase error at those respective times. Therefore, the frequency offset of the received signal can be easily calculated at the end of each slot by subtracting the negative phase error maintained by negative counter 116 from the positive phase error maintained by positive counter 114. If the frequency remained constant, as it would in an ideal world, the phase error of the signal during the slot period should remain constant. Therefore $\phi_e(t_{n+1}) - \phi(t_n) = 0$. Since the frequency does drift due to noise and other factors Δf represents the average offset frequency over each slot interval.

At the end of each slot frequency accumulator 118 is updated with cumulative phase error determined in subtractor 120 (i.e., the value of the positive counter 85 minus the value of the negative counter 86). The updated accumulated phase error is then compared to a predetermined threshold at 122. However, it is not necessary to make such a comparison after each slot, rather the cumulative phase error from several slots may be accumulated prior to comparing the value to the threshold. If the accumulated phase error is larger than the threshold, a new offset frequency is generated at 104 and stored by processor 22. The new offset frequency is then used to correct the phase error of the phase estimates input to AFC 46. The sum of counters 114 and 116 is proportional to the variance of the

phase. Consequently, this sum is useful as a lock indicator and a signal quality estimator. This sum is generated by adder 124 and passed through exponential filter 126. The output of filter 126 can be used as an estimate of the long term signal quality.

In an especially preferred embodiment, AFC hardware 100 (excluding adder 106 and phase error detector 108) is implemented according to the block diagram shown in Fig. 20. Corrected phase error bits output from phase error detector 108 are provided as an input to threshold detector 130. Preferably, the threshold is set at two (2). If the phase error is greater than two, threshold detector 130 outputs a logic high signal and if the phase error is less than two threshold detector 130 outputs a logic low signal. The bit (the 3rd bit output by format converter 98) indicating which octant of the identified quadrant the error falls within is input to AND gates 132 and 134. When the phase error exceeds the threshold and the phase error was in the first octant, i.e. sign bit is a "1", then the output of the AND gate 132 will increment late counter 136. However, when the phase error is in the second octant, i.e. sign bit = "0", it is inverted at input 138 to AND gate 134. AND gate 134 thereafter provides an output to increment the early counter 140.

As indicated previously, a corrected phase is output from AFC 46 to ATRC 48 corresponding to each window interval. A functional block diagram of ATRC 48 is shown in Figure 21. ATRC 48 is shown to include hardware 142 and software 144. Since ATRC 48 begins tracking the timing after the unique word has been detected, a window before the synchronizing window and a window after the synchronizing window can be identified.

The corrected phase from one window before the synchronizing window is input to the absolute (ABS) early error detector 146 and the corrected phase from one window following the synchronizing window is input to the ABS late error detector 148. The ABS early error detector 146 and the

ABS late error detector 148 preferably latch onto the

corrected phase and determine based on its value which of the possible transmitted phases is closest to the value. The difference between the closest transmit phase and the corrected phase value defines either the early or late error.

Since the synchronized window is optimally centered within a symbol interval to minimize error associated with detecting, demodulating, and decoding of the data transmitted, the early error and the late error are optimally equal, i.e. indicating that the synchronized window is properly centered within the symbol interval. Therefore, the early error is subtracted by subtractor 150 from the late error to provide a window offset error of the synchronized window. The window offset error is compared to a positive and negative threshold by positive threshold detector 152 and by negative threshold detector 154. If the window offset error is greater than the positive threshold, then positive threshold detector 152 increments early counter 156. If the window offset error is less than the negative threshold then negative threshold detector 154 increments late counter 158.

When all of the data has been received during a slot, early counter 156 and late counter 158 output the current values of their respective counters to ATRC software 144. The value of the late counter is subtracted from the value of the early counter by subtractor 160 and the resulting difference is provided to timing accumulator 162. Timing accumulator 162 during several slots of data provides the window timing error accumulated therein to the threshold comparator 164. Threshold comparator 164 compares the window timing error to a predetermined threshold. If the window timing error is greater than the threshold, ATRC software 144 computes a number of samples by which to adjust the window timing to more accurately center the synchronizing window.

For example referring to the window symbol timing diagram shown in Fig. 10, assume that W_A is the synchronizing window. ATRC 48 would determine that W_A is two samples late and would provide a timing adjust signal causing the phase detector 44 to delay the window timing by two samples.

The sum of counters 156 and 158 is also proportional to the variance of the phase. Consequently, this sum is useful as a lock indicator and a signal quality estimator. This sum is generated by adder 166 and passed through exponential filter 168. The output of filter 168 can be used as an estimate of the long term signal quality.

The AFC software 102 and ATRC software 144 are implemented according to the flowchart shown in Figures 22A and 22B. General purpose processor 22 in Figure 7 is preferably coupled to the receiver to receive inputs indicative of when a burst is received as shown at 202 (note interface is not shown in Figure 7). Processor 22, then waits for the end of the burst as shown at 204. The end of the burst could be determined by interrupt or other signal provided by the receiver to processor 22, or where each burst lasts for a known duration, calculating the time at which the burst would end based on the time it began and the known duration.

Following the reception of a burst in the continuous mode, processor 22 reads the AFC counters and the ATRC counters as shown at 206. The frequency offset over the burst is calculated at 208 by subtracting the values stored in the AFC positive counter from the value stored in the negative counter. The frequency difference is then added to an accumulated frequency difference, if any, at 210. The accumulated frequency difference is compared to a threshold, which is preferably set at 10, as shown at 212. If the absolute value of the accumulated frequency difference is greater than the threshold at 212, then AFC software determines whether the accumulated difference is positive or negative at 214. If it is positive then the frequency offset is incremented by 1 sample. Since in a preferred embodiment the sample rate is 19.2 MHz and the number of samples per symbol interval is 84, a 1 sample increment would be equivalent to a frequency adjustment of 2.285 KHz (19.2 MHz/84). If the accumulated difference is negative the frequency offset is decremented by 1 sample or 2.285 KHz in a

preferred embodiment. After the frequency offset is adjusted at either 216 or 218, the accumulated frequency difference is cleared to zero at 220. The frequency offset is then output from the processor 22 to the AFC and ATRC hardware as described above.

The ATRC software is executed according to steps 224 to 238 in Figure 22B. The timing offset is determined at 224 by subtracting the ATRC early counter from the ATRC late counter. The timing offset for each burst is then accumulated at 226. The absolute value of the accumulated timing offset is compared to a predetermined threshold at 228, which is preferably set to 4. If the absolute value of the accumulated timing offset is greater than 4, then the window synchronization requires an adjustment. This adjustment is implemented by processor 22 by incrementing the processor's bit timing mechanism thereby delaying the SYMBOL TIMING signal output from processor 22 whenever the accumulated timing offset is positive (shown in Figure 22 at 230 and 234). Similarly if the accumulated timing offset is negative, the processor's bit timing clock is decremented (shown at 230 and 232) to advance the SYMBOL TIMING signal output from processor 22. After an adjustment to the bit timing clock has been implemented, the accumulated timing offset is cleared at 236.

The adjustment to the processor's bit timing clock is output from the ATRC software after each burst. If no adjustment is required as determined at 228, a zero is output at 238. If the bit timing is to be incremented or decremented as determined at 230 through 234, the appropriate adjustment is output at 238.

As indicated previously, data detector 50 converts the corrected phase into its corresponding binary symbol representation. Before a synchronizing window has been identified, a number of symbols are accumulated to form a sequence of binary data to be compared to the unique word by unique word detector 52. Since the symbol boundaries are not known *a priori*, sequences must be generated corresponding to

each of the windows. For example, referring to Fig. 9, if $\phi_0 = \pi/4$, $\phi_1 = -\pi/4$, $\phi_2 = -3\pi/4$, and $\phi_3 = 3\pi/4$, then the respective symbols can be "00", "10", "11", and "01" resulting in a binary sequence of "00101101".

Since each window W_A, W_B, W_C, and W_D, is used to compute the phase estimate of the received PSK signal, a sequence of binary data would be generated for each window. Due to intersymbol interference, only the phase estimates from each window W_A would be likely to be decoded accurately. Therefore, data decoder 50 must decode each phase estimate and provide a sequence of data equivalent in length to the unique word, (e.g. if the unique word has 3 symbols with two bits per symbol, then the length is 6 bits) to unique word detector 52. Furthermore, since it is not known *a priori* when the unique word has been received the sequence must be advanced by one symbol for each of the N windows. For instance using the sequence of symbols described above data decoder 50 would transmit the following to the unique word detector in the order listed:

W_B = 001011 (assuming negligible intersymbol interference and noise)
W_A = 001011 (assuming negligible noise)
W_C = 001011 (assuming negligible intersymbol interference and noise)
W_D = ?????? (on symbol boundary)
W_B = 101101 (assuming negligible intersymbol interference and noise)
W_A = 101101 (assuming negligible noise)
W_C = 101101 (assuming negligible intersymbol interference and noise)
W_D = ?????? (on symbol boundary)
W_B = 1101...

After the unique word is detected by unique word detector 52 only data from the synchronizing window is decoded. The decoded data is then output to processor 22 for data processing.

A block diagram of unique word detector 52 is shown in Figure 23. Correlator 170 receives an input of binary data from data decoder 50 and the predetermined unique word from processor 22. Correlator 170 performs a symbol to symbol comparison of the symbol sequence of the decoded data

to the symbols of the unique word. For instance if the unique word contained 3 symbols, "10", "11" and "01", using the example above, window W_A would match with a 1:1 correlation (i.e. all three symbols match) to the unique word. Assuming data from windows W_B and W_C would be effected by intersymbol interference their respective correlations may be degraded (i.e. the number of matching symbols may be reduced to only 1 or 2).

Unique word detector 52 uses a threshold comparator 172 that compares the number of matching symbols to a predetermined threshold and defines a measure of correlation between the sequence and the unique word. If the number of matches is greater than or equal to the threshold, then detect logic 174 will generate a detection signal. As indicated above, it is possible that more than one of the windows will provide sequences that exceed the threshold when a unique word is received. In a preferred embodiment, the predetermined threshold is adjustable, for instance, via processor 22 to minimize probability of false alarm and maximize the probability of detection as is well known.

Selection of the best window is accomplished in unique word detector 52 by adding the correlation results of three consecutive sequences (e.g. sequences corresponding to windows W_B, W_A, and W_C) together to form a cumulative correlation value. Then adding the very next combination of three consecutive windows (e.g. W_A, W_C, and W_D) to form another cumulative correlation value. If the second cumulative correlation value is less than the first, then the first cumulative correlation value corresponds to the window being most centralized with respect to the symbol boundaries and the second of the three windows should be designated as the synchronizing window.

This process is implemented in unique word detector 52 by delaying each measure of correlation (i.e. number of matches) determined by the correlator 170 for two intervals. For example, using the four window example shown in Figure 9, an average phase estimate would be generated every 1/4 symbol

period corresponding to the four windows. Accordingly, a sequence of binary data would be provided to the unique word detector at a rate of 4 times the symbol interval. Thus each measure of correlation should be delayed for 1/4 symbol time by delay 176 and then delayed a second 1/4 of a symbol time by delay 178. The current measure of correlation, and the measures delayed 1/4 and 1/2 symbol times are added together by adder 180 resulting in a cumulative correlation value. The cumulative correlation value is delayed for a 1/4 symbol time by delay 182 and subsequently compared with the next cumulative correlation value by comparator 184. When a subsequent cumulative correlation value is less than the previous one, and the unique word has been detected, detect logic 174 also provides an output indicating which window is the synchronizing window. Processor 22 uses this information to control the demodulator timing, i.e., SYMBOL TIMING signal utilized by AFC 46, ATRC 48 and data decoder 50. It should be understood that the above-described operation of the unique word detector could be implemented in software as well.

While the invention has been described and illustrated with reference to specific embodiments, those skilled in the art will recognize that modifications and variations may be made without departing from the principles of the invention as described hereinabove and set forth in the following claims.

CLAIMS

We Claim:

1. In a digital communications system having a transmitter for transmitting information in the form of an analog phase shift keyed (PSK) signal and a receiver for receiving said PSK signal, said PSK signal having amplitude, frequency, and phase characteristics wherein at least some of said phase characteristics are related to the information so transmitted, a demodulator comprising;

a phase detector receiving an input of digital data representative of said analog PSK signal so received and providing successive outputs representative of phase estimates of said PSK signal based on transitions in said digital data; and

a data decoder having an input coupled to said phase detector to receive an input of said phase estimates, said data decoder converting said phase estimates to phase data indicative of said transmitted information.

2. The demodulator of claim 1, wherein said digital data comprises a plurality of samples grouped into overlapping windows, a time between consecutive samples defining a sampling period, the demodulator further comprising:

a timing recovery controller coupled to said phase detector and having an input related to said phase estimates and operable to provide an output representative of an amount to adjust said windows by one of i) advancing said windows at least one sampling period and ii) delaying said windows by at least one sampling period.

3. The demodulator of claim 1, further comprising:

a frequency controller having an input coupled to said phase detector for accepting said phase estimates and providing an output representative of a corrected phase corresponding to each phase estimate input thereto.

4. The demodulator of claim 3, wherein said digital data comprises a plurality of samples which are grouped into overlapping windows, a time between consecutive samples defining a sampling period, the demodulator further comprising:

a timing recovery controller coupled to said frequency controller and having an input of said corrected phase estimates received during each window and providing an output representative of an amount to adjust said windows by one of i) advancing said windows at least one sampling period and ii) delaying said windows by at least one sampling period.

5. The demodulator of claim 4, wherein, said PSK signal comprises a known sequence of data defining a unique word, said demodulator further comprising:

a unique word detector having an input for receiving said phase data, said unique word detector making a determination that said unique word has been detected based on said phase data and identifying a set of said windows in which said unique word is so detected and defining said set of windows as synchronizing windows and further providing an output identifying said synchronizing windows; and

said data decoder being further coupled to the unique word detector to receive said output identifying said synchronizing windows, said data decoder providing an output of said phase data associated with said synchronizing windows.

6. The demodulator of claim 1, wherein said PSK signal comprises a known sequence of data forming a unique word, the demodulator further comprising:

a unique word detector coupled to said data decoder and having an input for receiving said phase data, said unique word detector making a determination that said unique word has been detected based on said phase data and providing an output representing the same.

7. The demodulator of claim 1, wherein said digital data comprises a sequence of successive digital samples, each sample having a value associated with one of a high level and a low level, the phase decoder comprising:

an instantaneous phase decoder having an input of said digital data, said instantaneous phase decoder determining if a transition between consecutive digital samples has occurred such that one of 1) one sample has a value associated with said high level and a subsequent digital sample has a value associated with said low level and 2) one sample has a value associated with said low level and a subsequent digital sample has a value associated with said high level, and providing a decoded output representative of at least said transitions so determined; and

an instantaneous phase estimator having an input coupled to said instantaneous phase decoder to receive said decoded output, said instantaneous phase estimator providing an output representative of an average phase estimate based on said transitions.

8. The demodulator of claim 7, wherein said PSK signal represents a sequence of known data symbols, each symbol being associated with a phase characteristic of said PSK signal, said instantaneous phase estimator comprising:

a counter for incrementing a counter value related to an instantaneous phase of said PSK signal; and

an accumulator having a first input coupled to an output of said counter and a second input coupled to said instantaneous phase decoder, said accumulator accumulating said counter values of said counter upon each determination that a transition has occurred.

9. The demodulator of claim 7, wherein said PSK signal represents a sequence of known data symbols, each symbol being associated with a phase of said PSK signal, the phase detector further comprising:

a differential phase detector having an input coupled to said instantaneous phase estimator, said differential phase detector generating an output representative of a difference between each average phase estimate and a previous average phase estimate.

10. The system of claim 1, wherein substantially all amplitude characteristics are removed from said digital data before said digital data is received by said phase detector.

11. A method for demodulating a phase shift keyed (PSK) signal having a sequence of symbols, each symbol being based upon one of a known set of possible transmitted phases, said symbols being received in succession by a receiver, comprising the steps of:

generating an analog signal indicative of the symbols received by the receiver and defining the analog signal as said PSK signal;

digitizing said PSK signal to provide a sequence of digital data samples representative of said PSK signal received, each digital data sample having a value associated with one of a high level and a low level;

identifying transitions from said high level to said low level and from said low level to said high level between successive digital data samples;

generating a phase estimate based on said transitions so identified; and

decoding each phase estimate to provide binary data representative of said symbols received and defining said data as decoded data.

12. The method of claim 11, further comprising the steps of:

accumulating a sequence of the binary data;

correlating said sequence of binary data to a unique sequence of binary data;

providing a measure of said correlation; and

generating a detection signal if said measure exceeds a predetermined threshold.

13. The method of claim 12, further comprising the steps of:

accumulating subsequent sequences of binary data;

correlating each subsequent sequence of binary data to said unique sequence of binary data;

providing a measure of said correlation for each subsequent correlation;

selecting one sequence of binary data having a highest measure of correlation; and

providing an output identifying said selected sequence.

14. The method of claim 13, wherein the step of selecting said sequence of binary data having the highest measure of correlation comprises the steps of:

adding a number of consecutive measures of correlation together resulting in a cumulative correlation value for each sequence of binary data;

comparing each cumulative correlation value to a most previous cumulative correlation value until a current cumulative correlation value is less than a most previous correlation value and defining that most previous cumulative correlation value as the highest cumulative correlation; and

defining one sequence of binary data corresponding to the last of the number of measures of correlation added together to form the highest cumulative correlation as the selected sequence of binary data.

15. The method of claim 11, wherein the step of digitizing said PSK signal comprises the steps of:

limiting the analog signal representative of said PSK signal to provide a discrete signal so that where said analog signal has an amplitude greater than zero said

discrete signal has an amplitude corresponding to a first predetermined level and where said analog signal has an amplitude less than zero said discrete signal has an amplitude corresponding to a second predetermined level; and

sampling said discrete signal thereby forming said digital data samples.

16. The method of claim 11, further comprising:

comparing each phase estimate with a previous phase estimate to determine a difference between each two consecutive transmitted phases.

17. The method of claim 11, wherein each symbol is transmitted for a period of time defining a symbol interval, the method further comprising;

generating a number of phase estimates during each symbol interval; and

averaging said number of phase estimates over a period of time defining a window to provide an averaged phase estimate.

18. The method of claim 17, further comprising: defining a number of overlapping windows.

19. The method of claim 17, wherein a length of said window is less than the symbol interval.

20. The method of claim 11, wherein each symbol is transmitted for a period of time defining a symbol interval, the method further comprising;

generating a number of said phase estimates during each symbol interval;

defining a number of windows, each window having a length less than said symbol interval;

generating an average phase estimate corresponding to each window;

PCT/US 93/12697
IPEA/US 01 AUG 1994

generating a frequency offset representative of a difference between average phase estimates; and

correcting said average phase estimates by adjusting said average phase estimates by said frequency offset.

21. The method of claim 20, further comprising;

grouping said windows into sets based on a relative reference in time of each said window to said symbol interval;

accumulating sets of decoded data so that each said set of decoded data corresponds to those windows in said set of windows;

comparing each set of decoded data to a known sequence of data;

generating a detect signal when said decoded data is substantially the same as said known sequence of data; and

defining a set of synchronizing windows as said set of windows corresponding to said set of decoded data when said set of decoded data is substantially the same as said known sequence of data.

22. The method of claim 21, further comprising:

defining a window before each of said synchronizing windows as an early window;

defining a window after each of said synchronizing windows as a late window;

determining a phase offset for each of said early and late windows;

comparing said phase offset corresponding to said early window and said phase offset corresponding to said late window, said comparison resulting in a difference between said two phase offsets representative of a timing offset;

adjusting a timing of said synchronizing windows relative to said symbol interval, based on said timing offset.

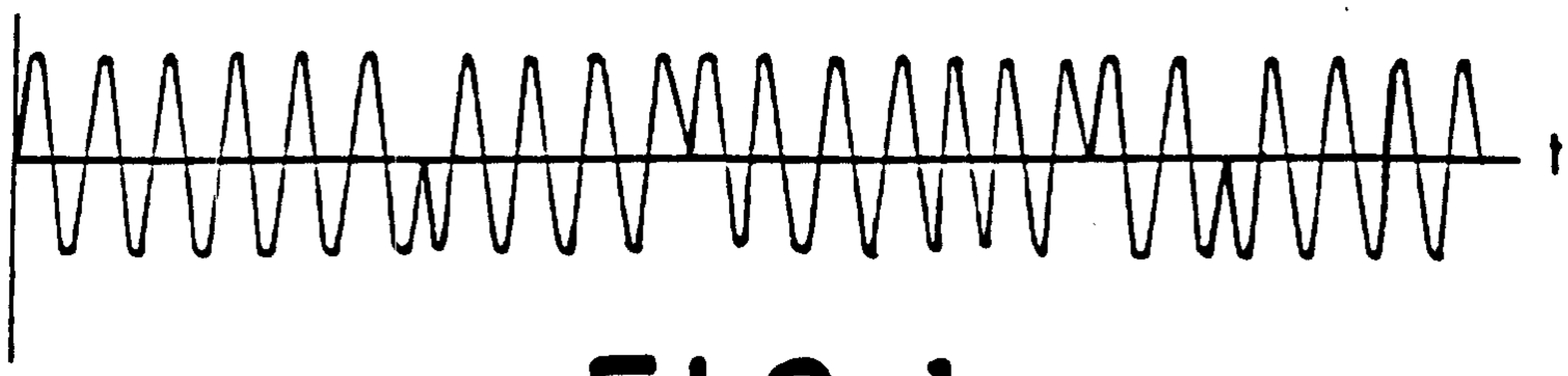

FIG. 1
PRIOR ART



FIG. 2a
PRIOR ART



FIG. 2b
PRIOR ART

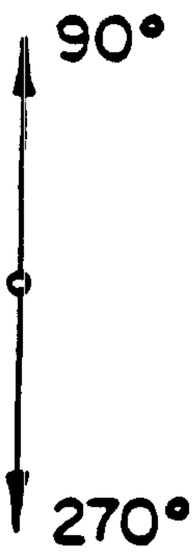

FIG. 2c
PRIOR ART

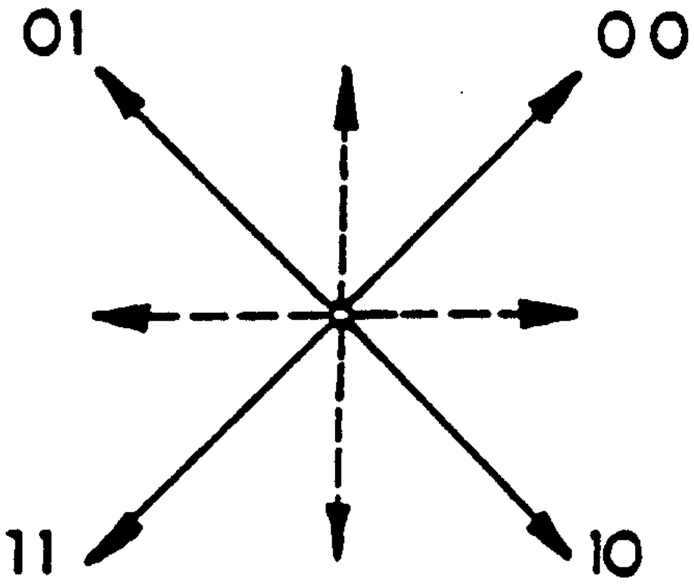

FIG. 2d
PRIOR ART

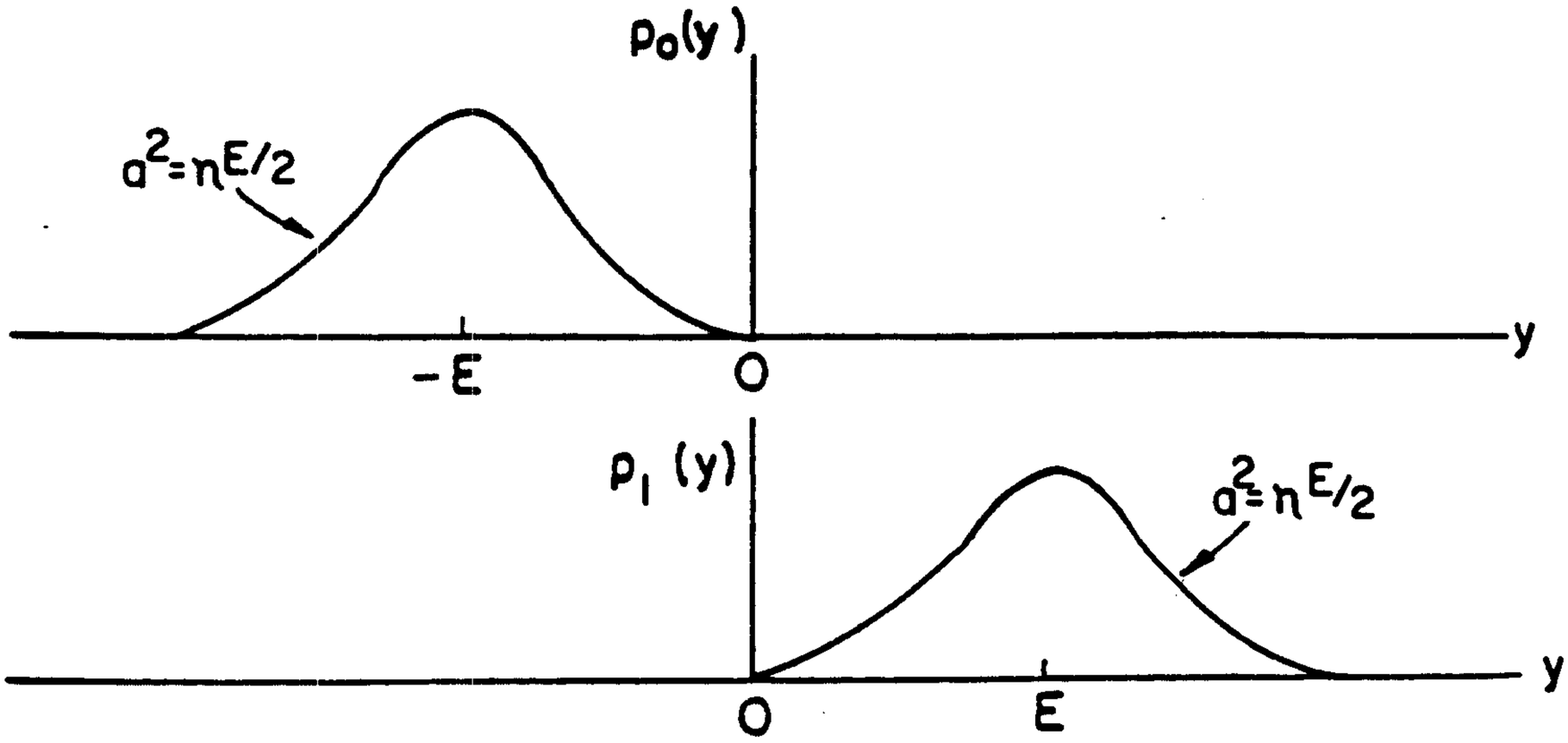

FIG. 4
PRIOR ART

Scott & Aylen

B

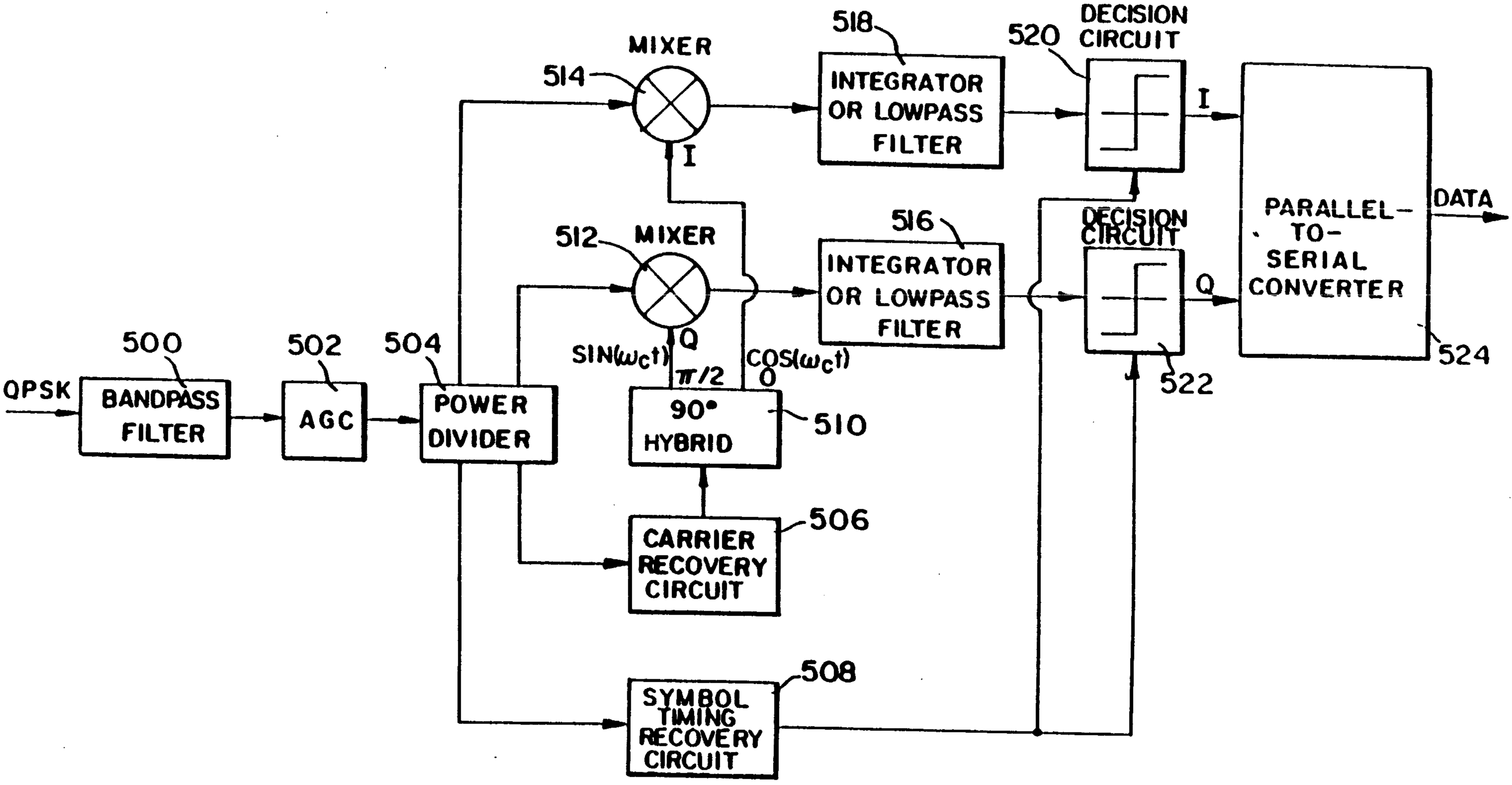

FIG. 3
PRIOR ART

2152781

Scott & Aylen

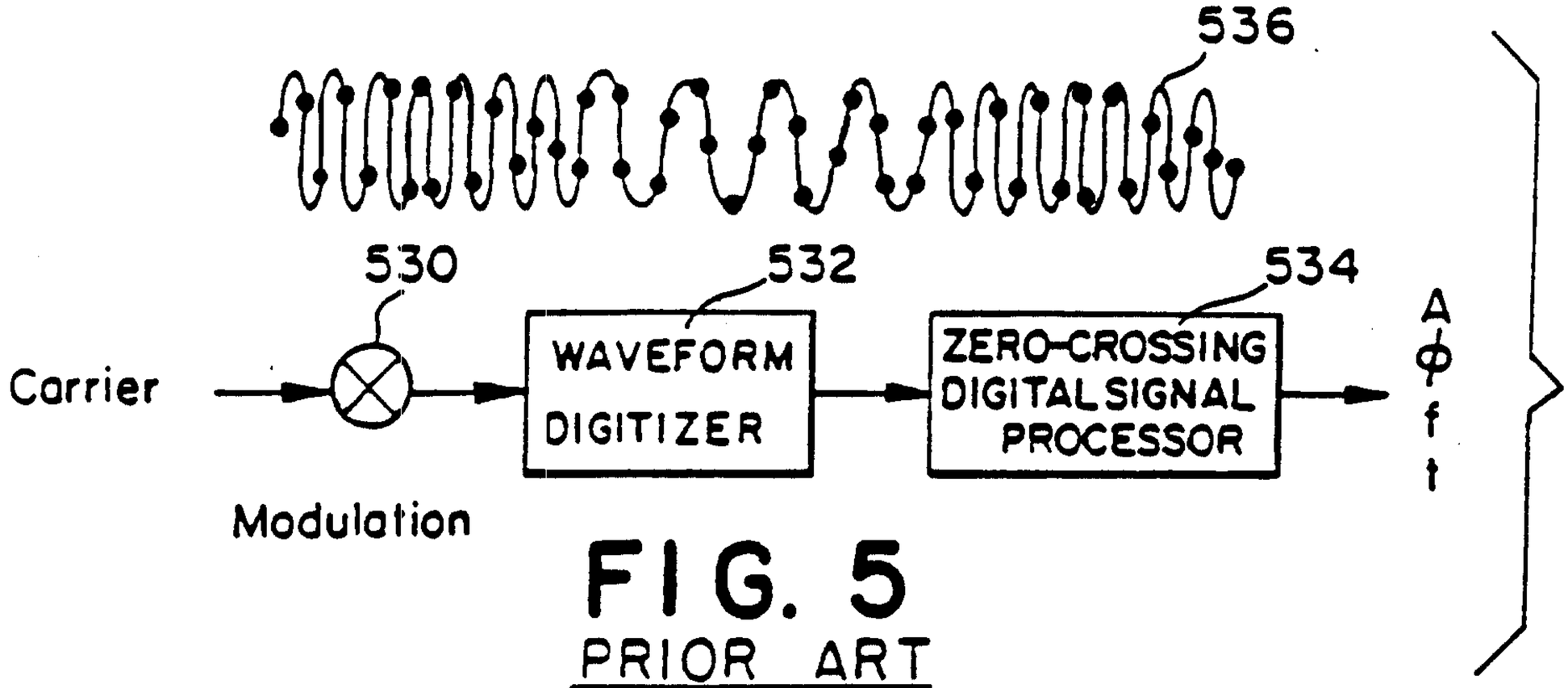

FIG. 5
PRIOR ART

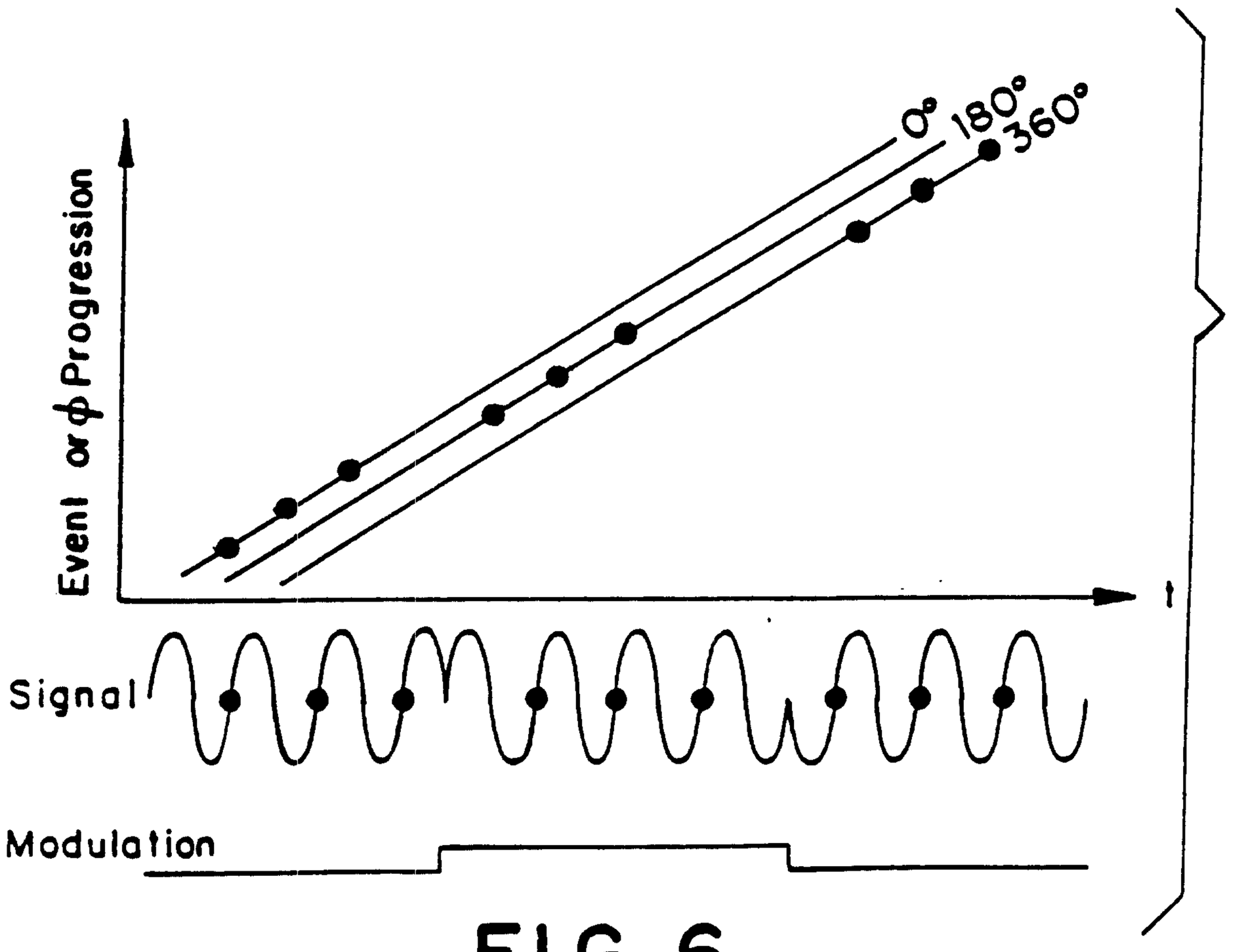

FIG. 6
PRIOR ART

Scott & Aylen

B

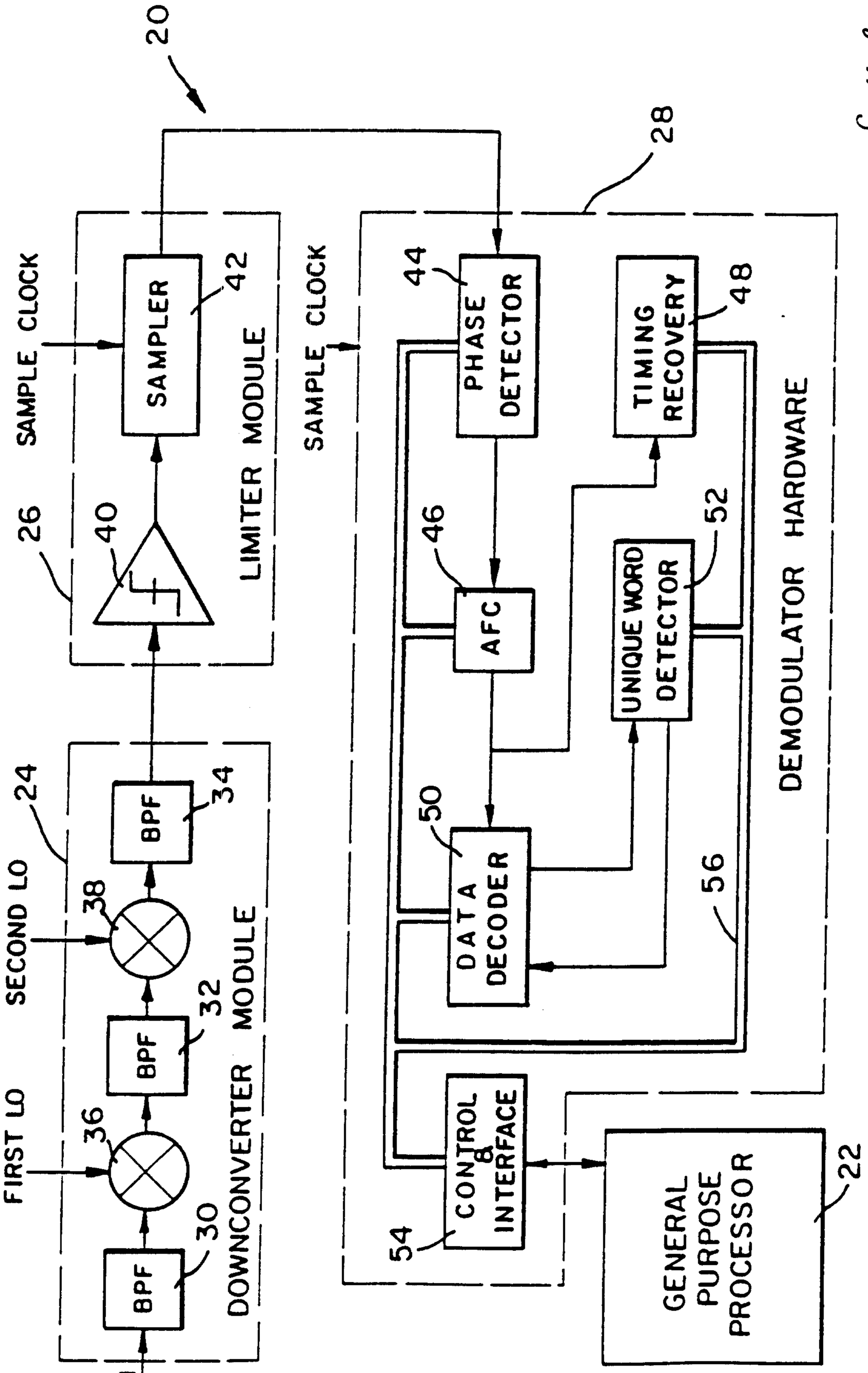

FIG. 7

Scott & Aylen

B

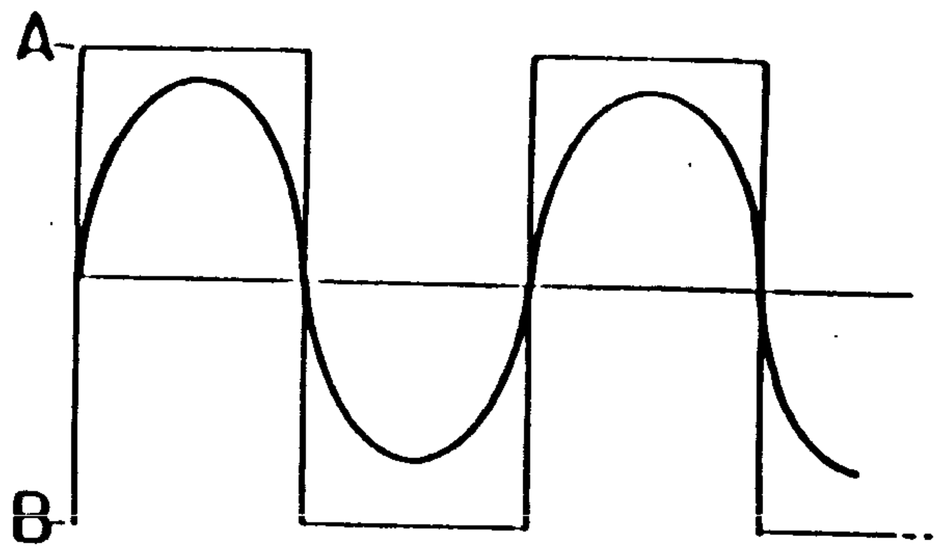

FIG. 8

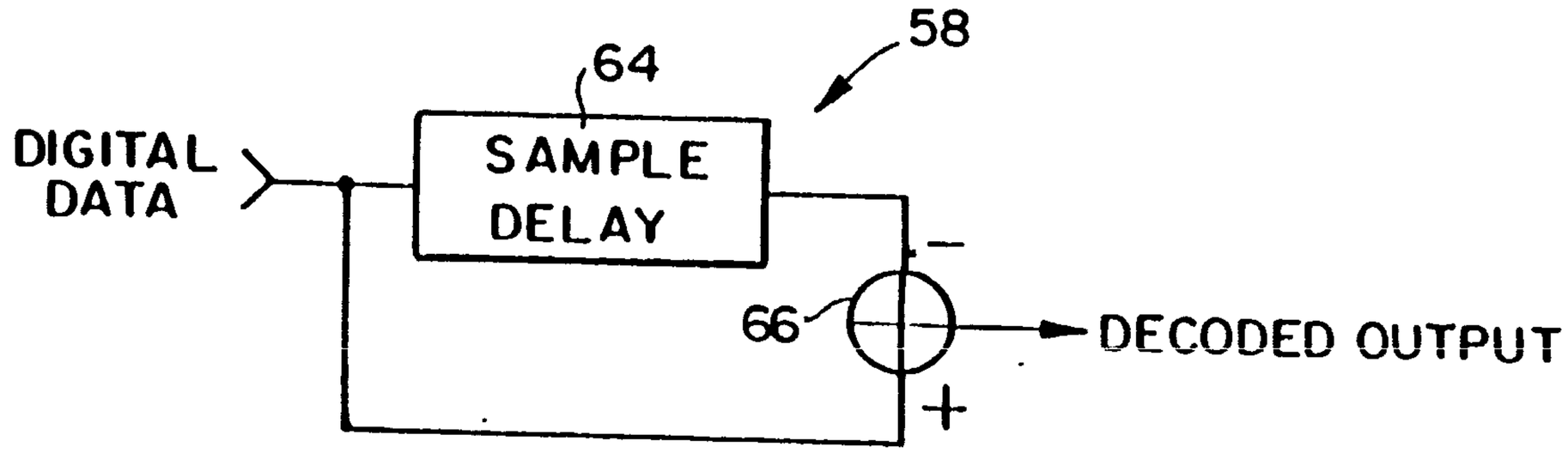

FIG. 12

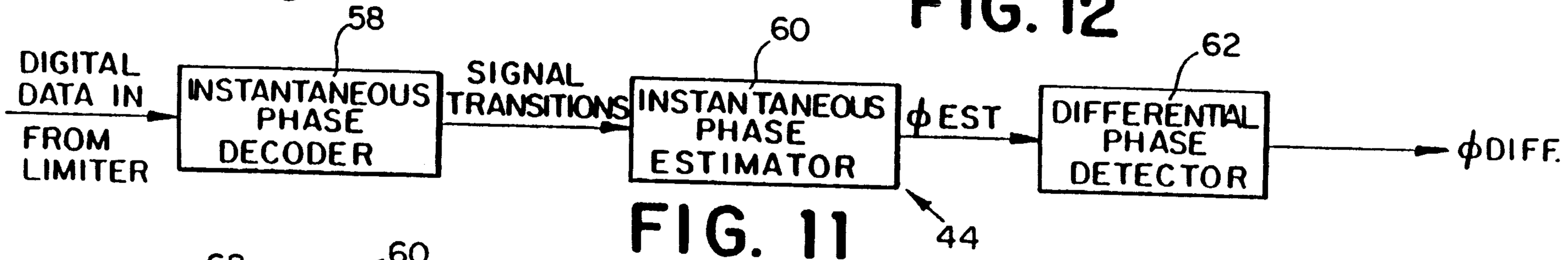

FIG. 11

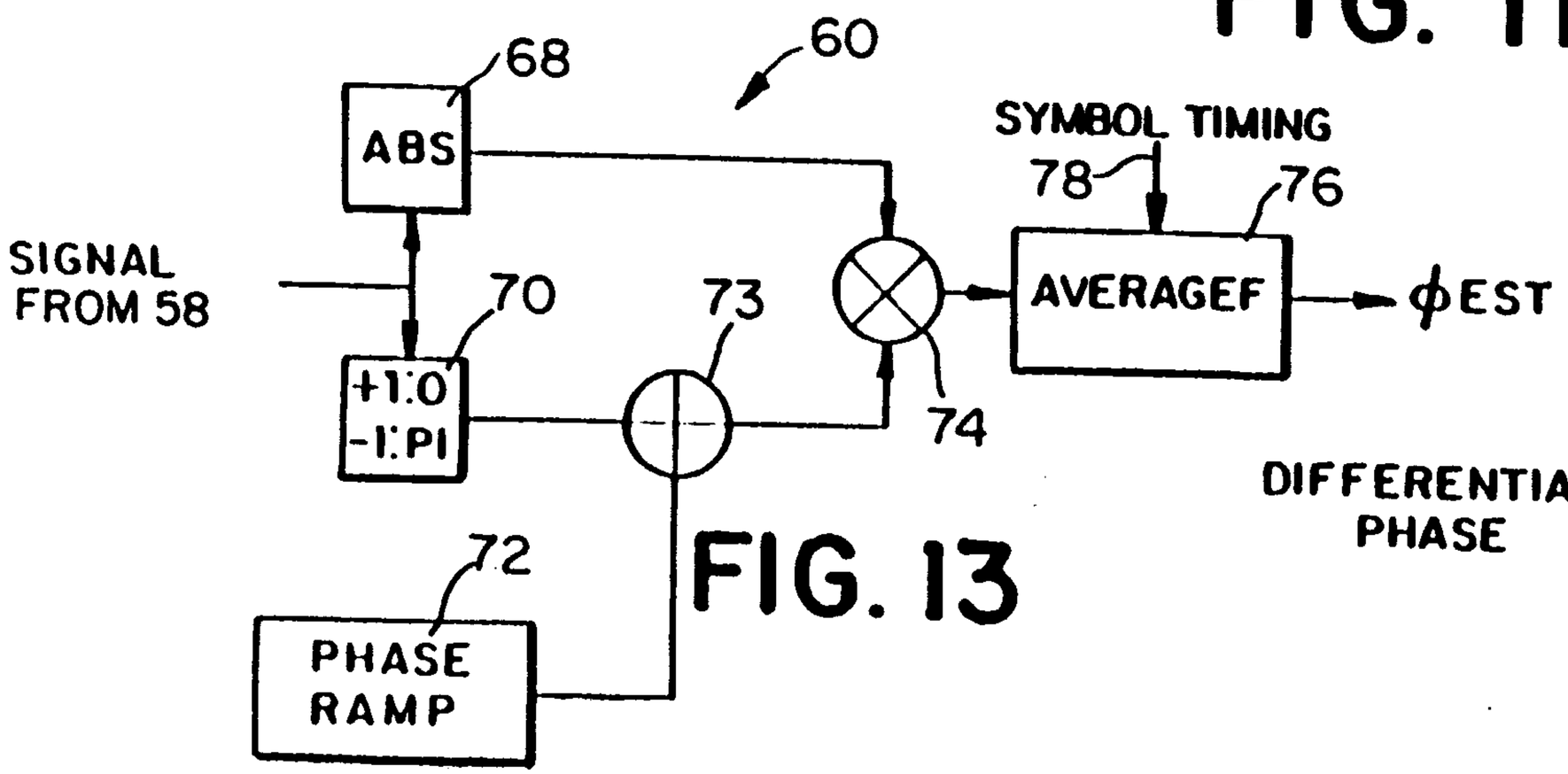

FIG. 13

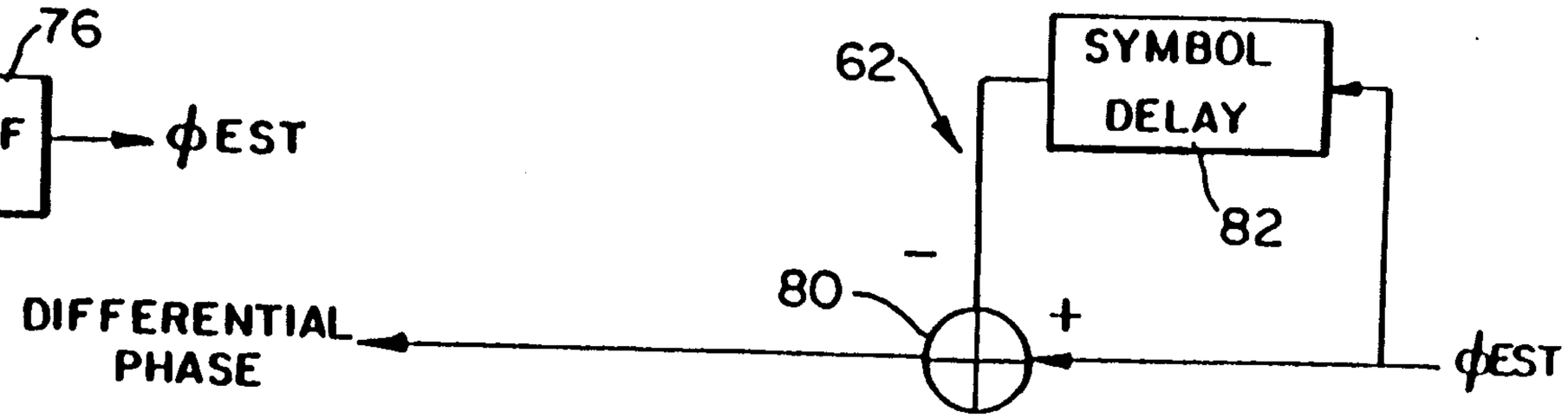

FIG. 14

2152781

Scott & Aylen

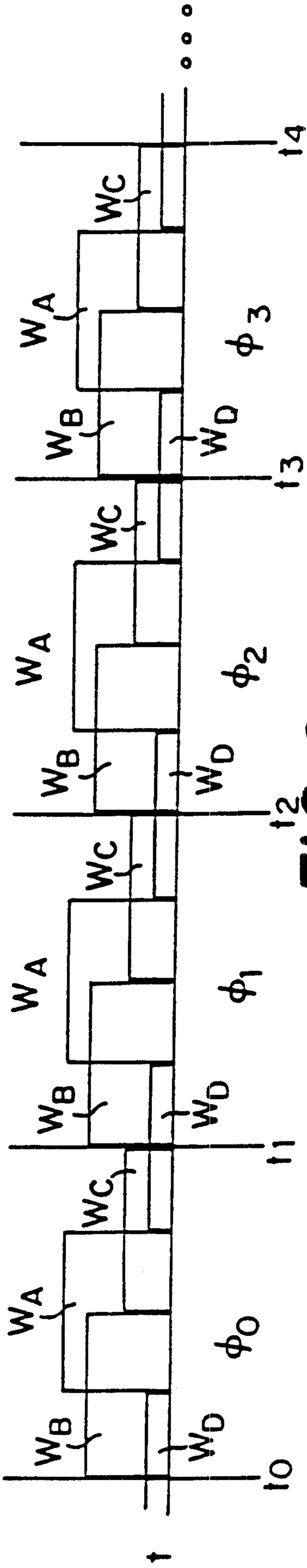

FIG. 9

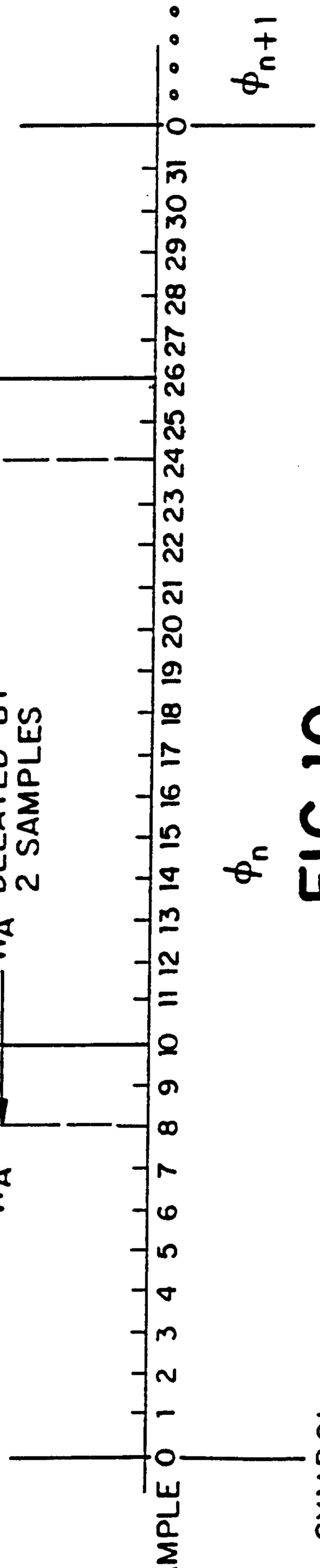

FIG. 10

Scott & Aylen

B

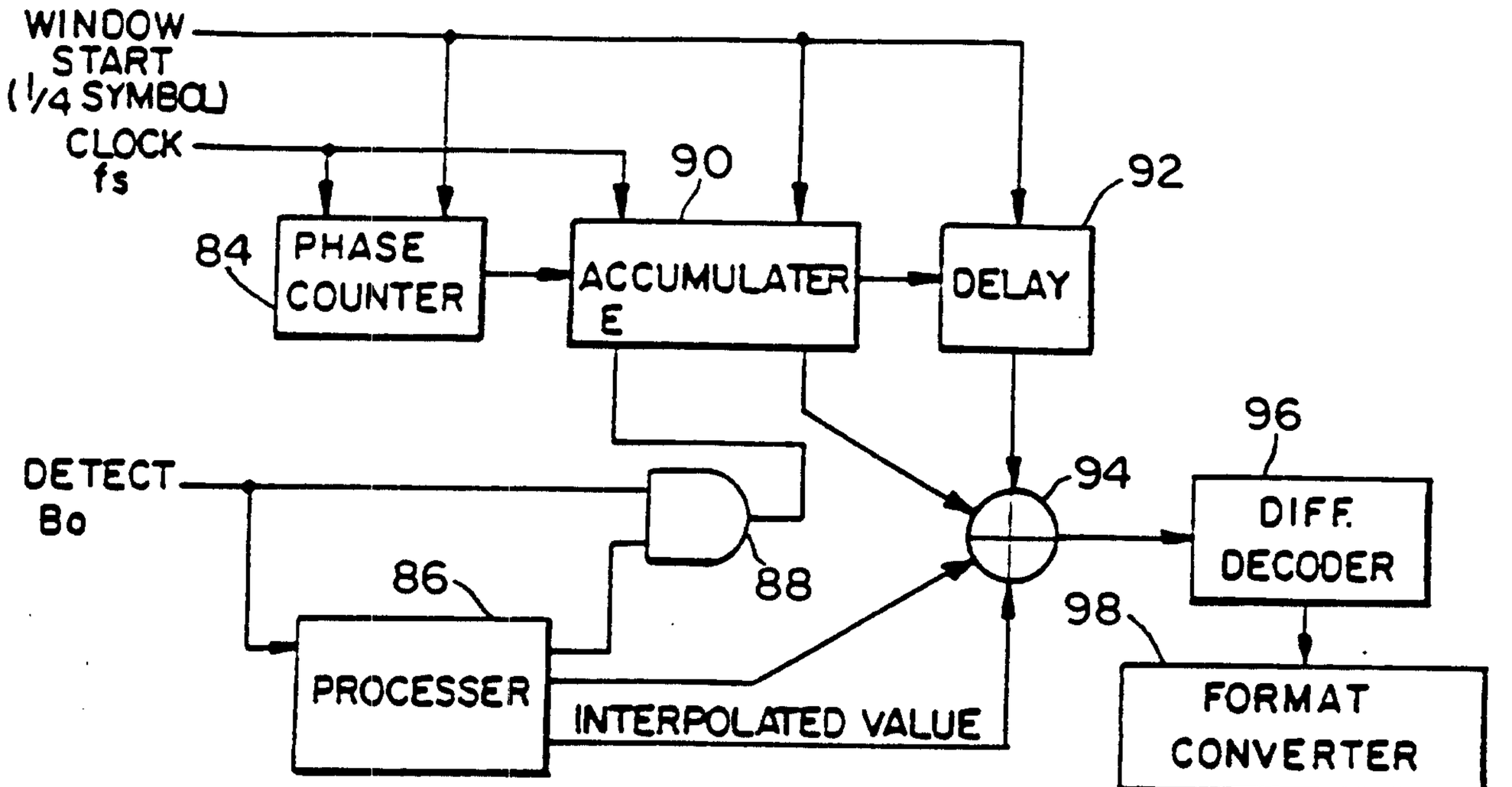

FIG. 15

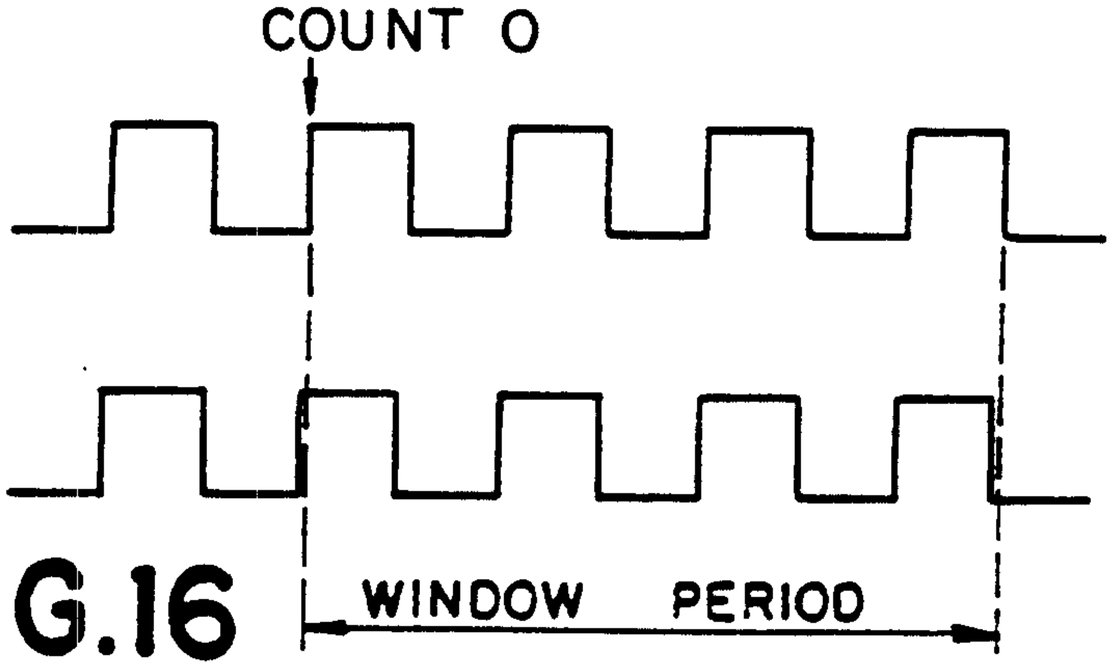

FIG.16

QUADRANT MAPPING

X	Y	DIFF PHASE
1	1	-3pi/4
0	1	3pi/4
0	0	pi/4
1	0	-pi/4

OCTANT MAPPING

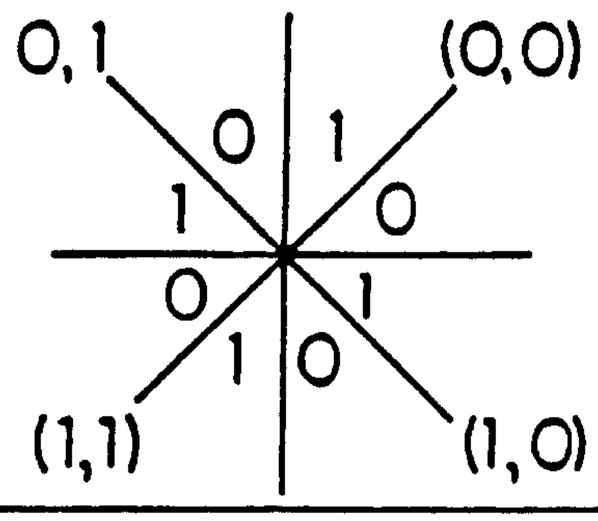

FIG. 18

Scott & Aylen

B

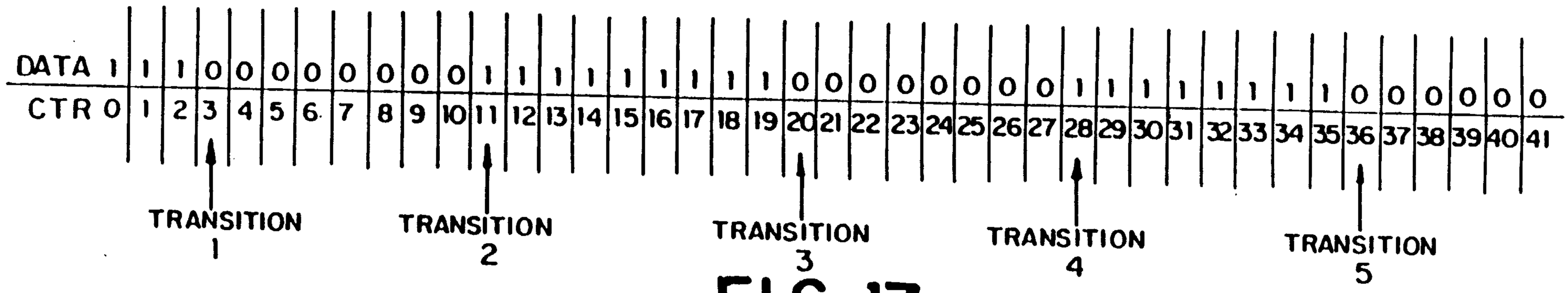

FIG. 17

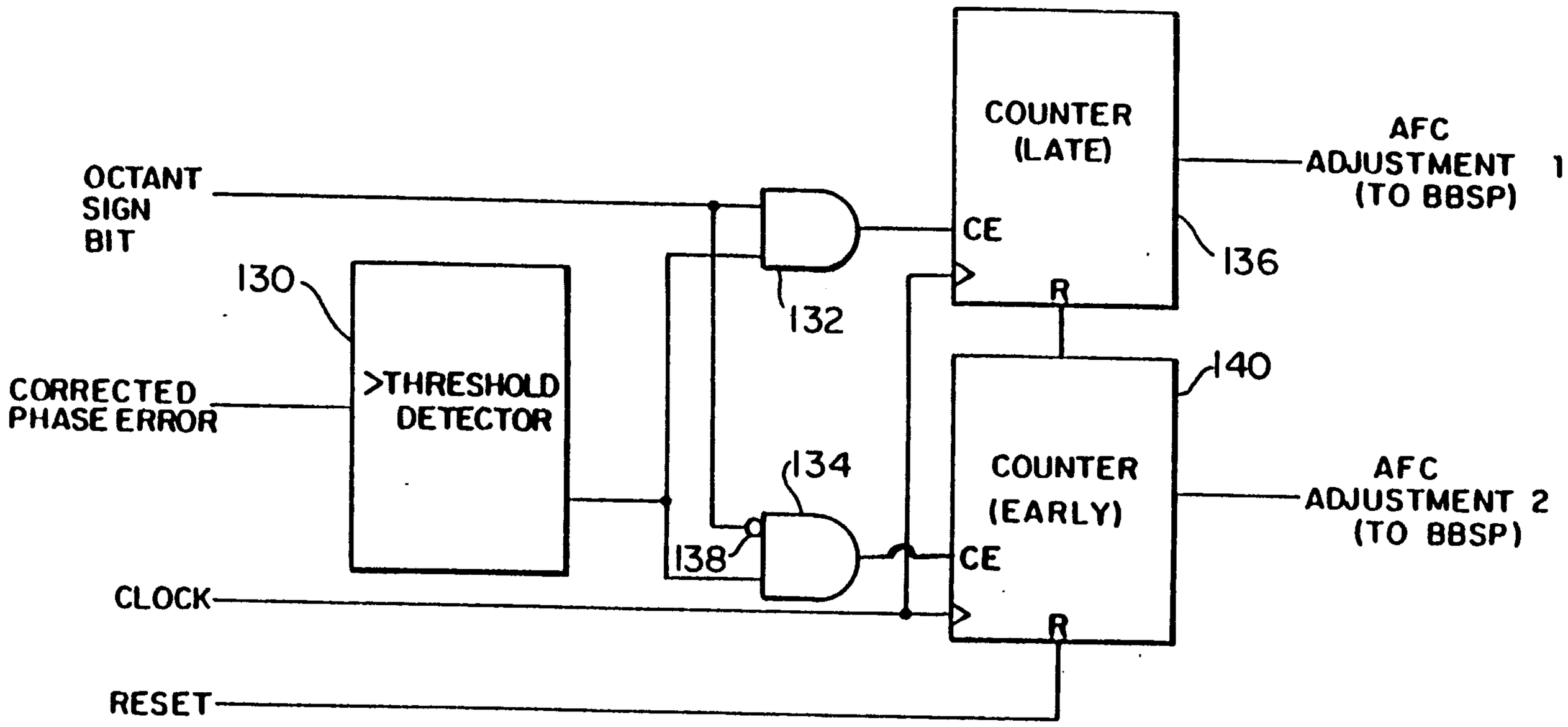

FIG. 20

2152781

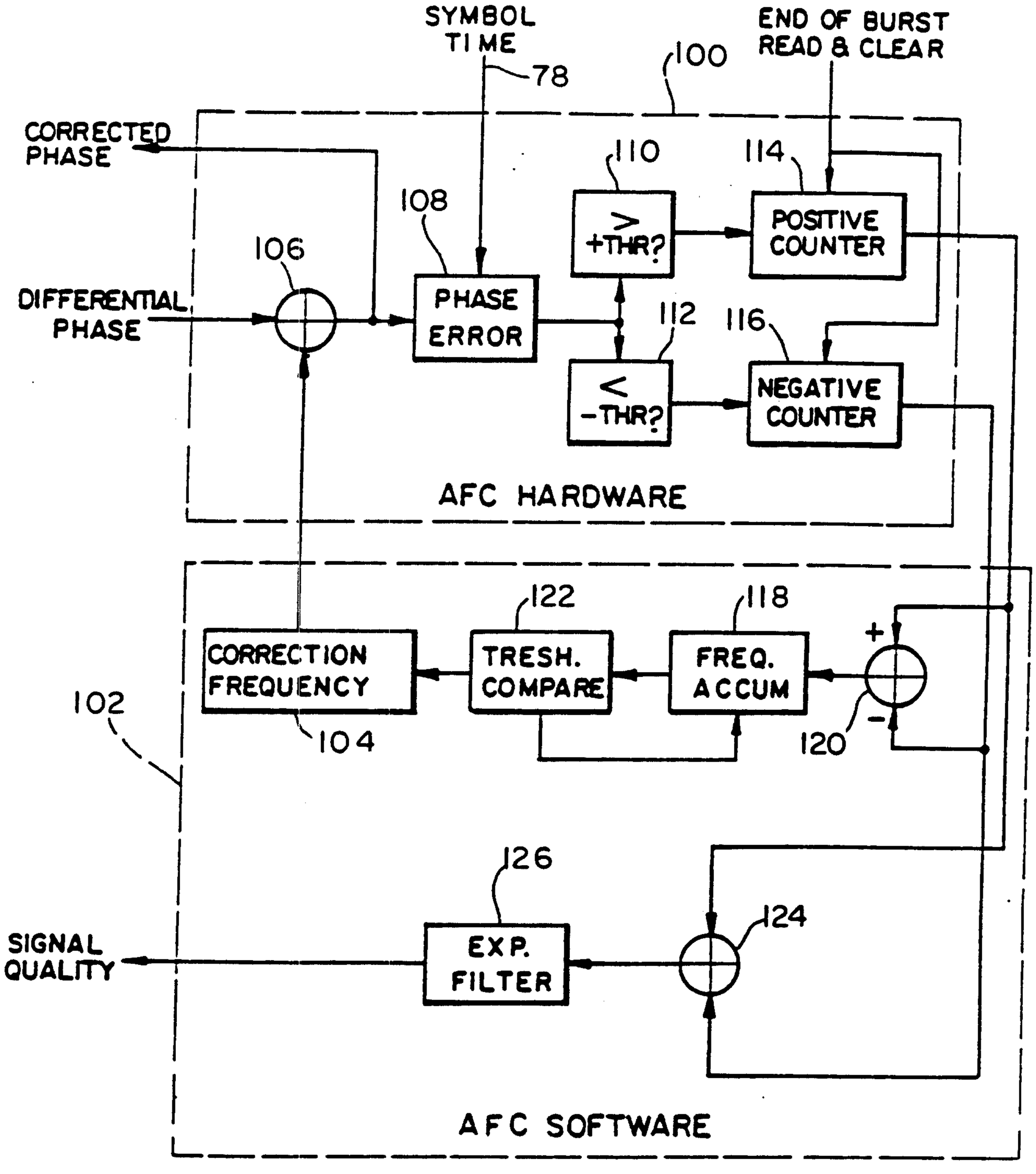

FIG. 19

Scott & Aylen

B

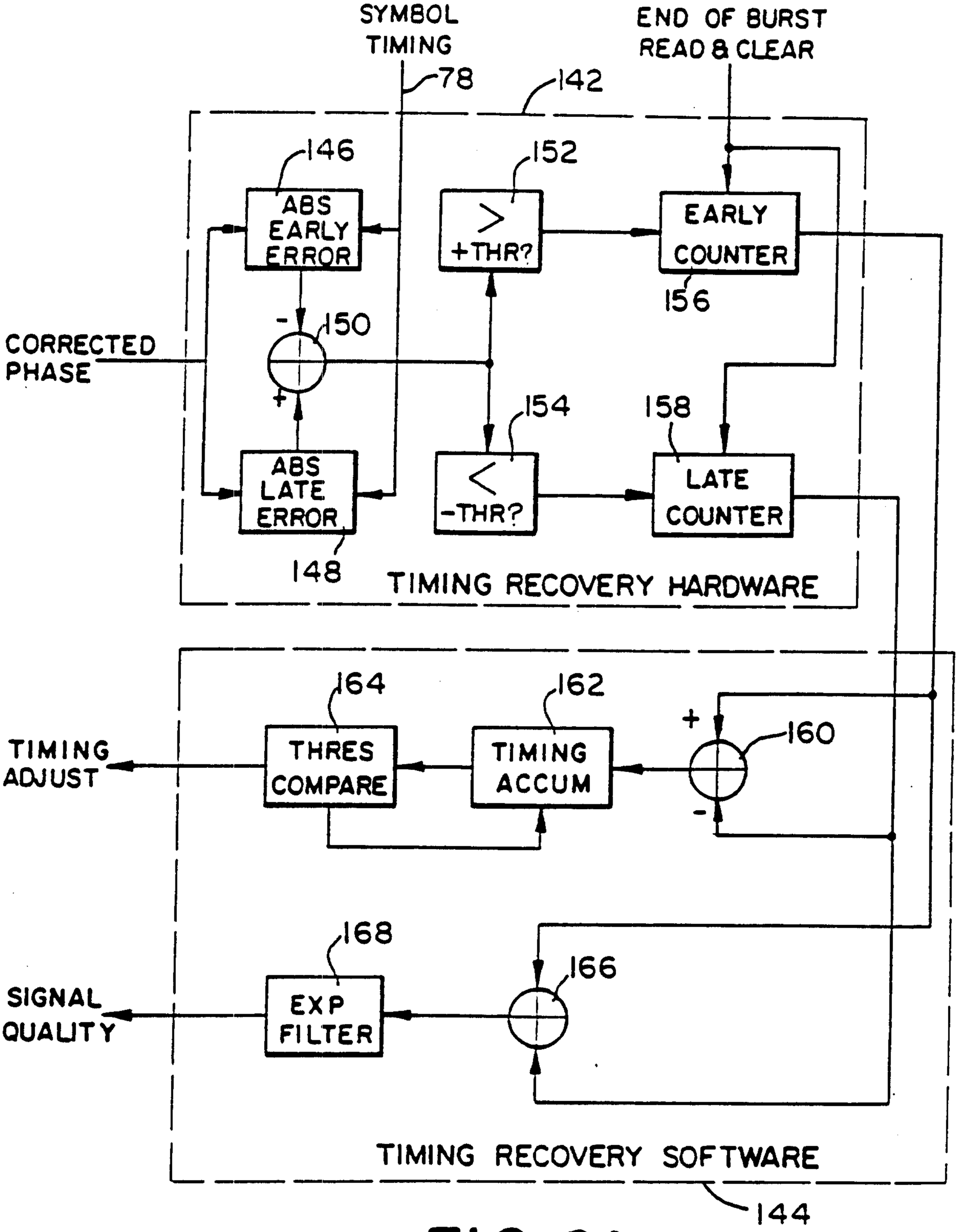

FIG. 21

Scott & Aylen

B

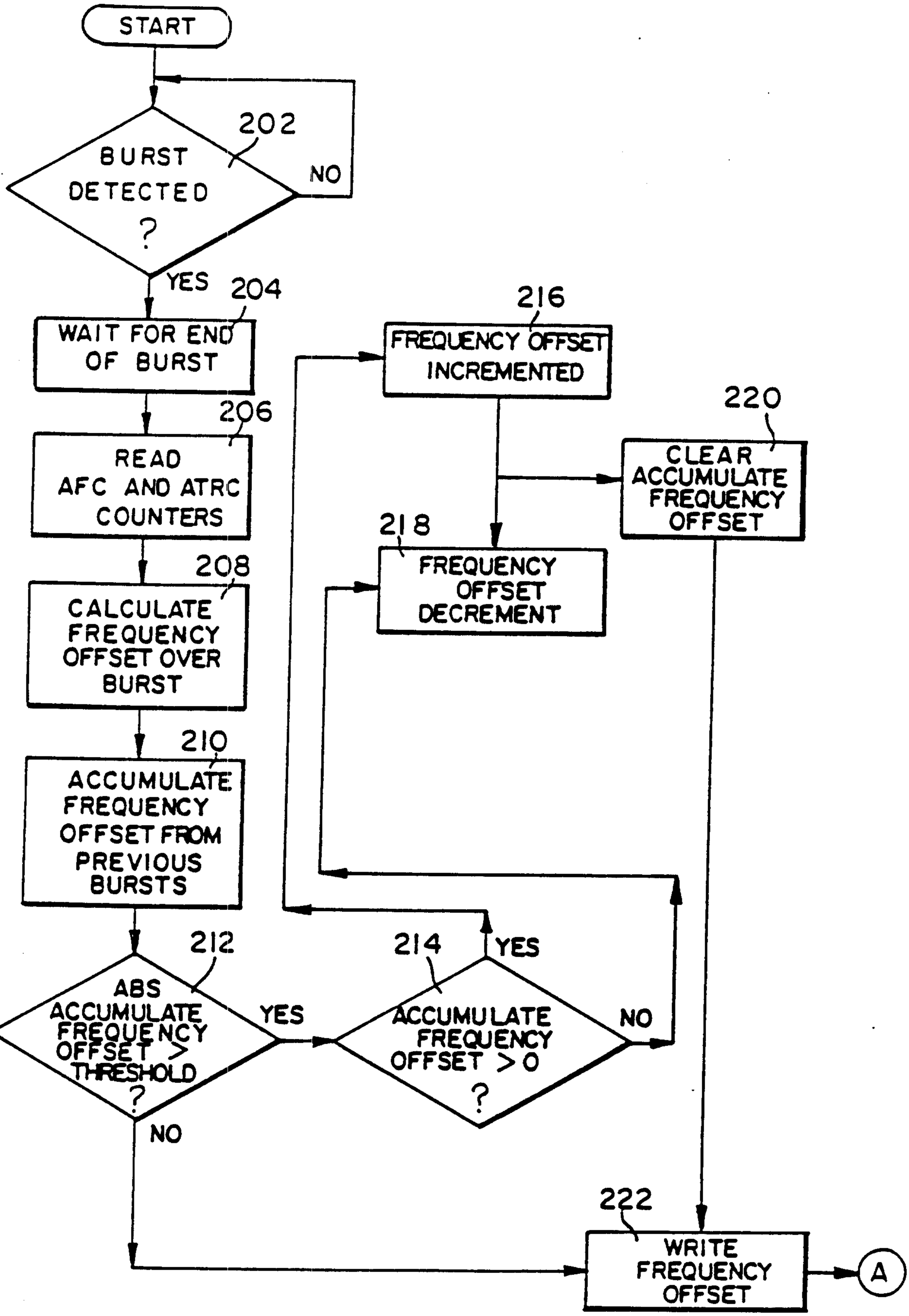

FIG. 22A

Scott & Aylen

B

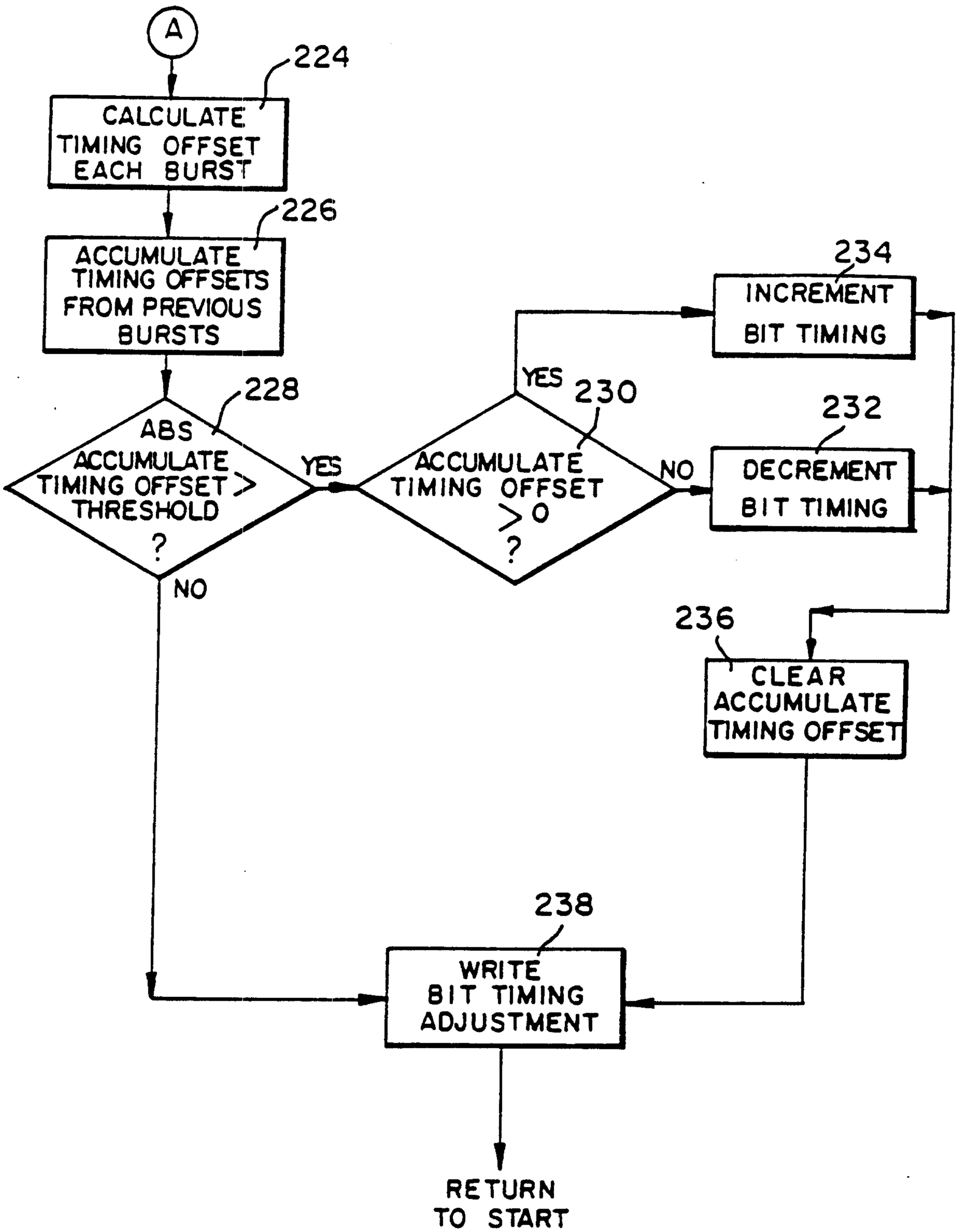

FIG. 22B

Scott & Aylen

B

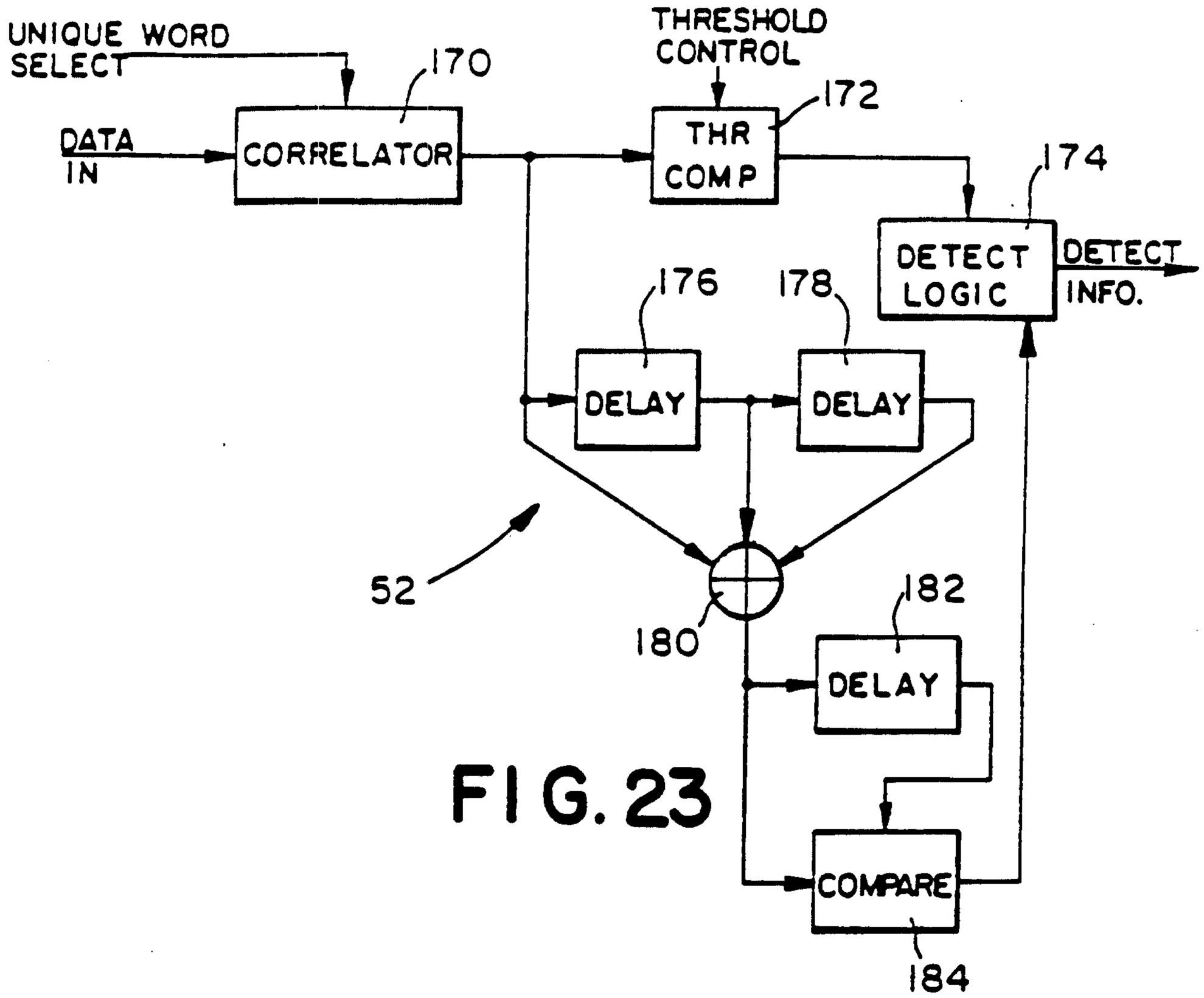
UNIQUE WORD SELECT
170
THRESHOLD CONTROL
172
DATA IN
CORRELATOR
THR COMP
174
DETECT LOGIC
DETECT INFO.
176
178
DELAY
DELAY
52
180
182
DELAY
COMPARE
184

FIG. 23

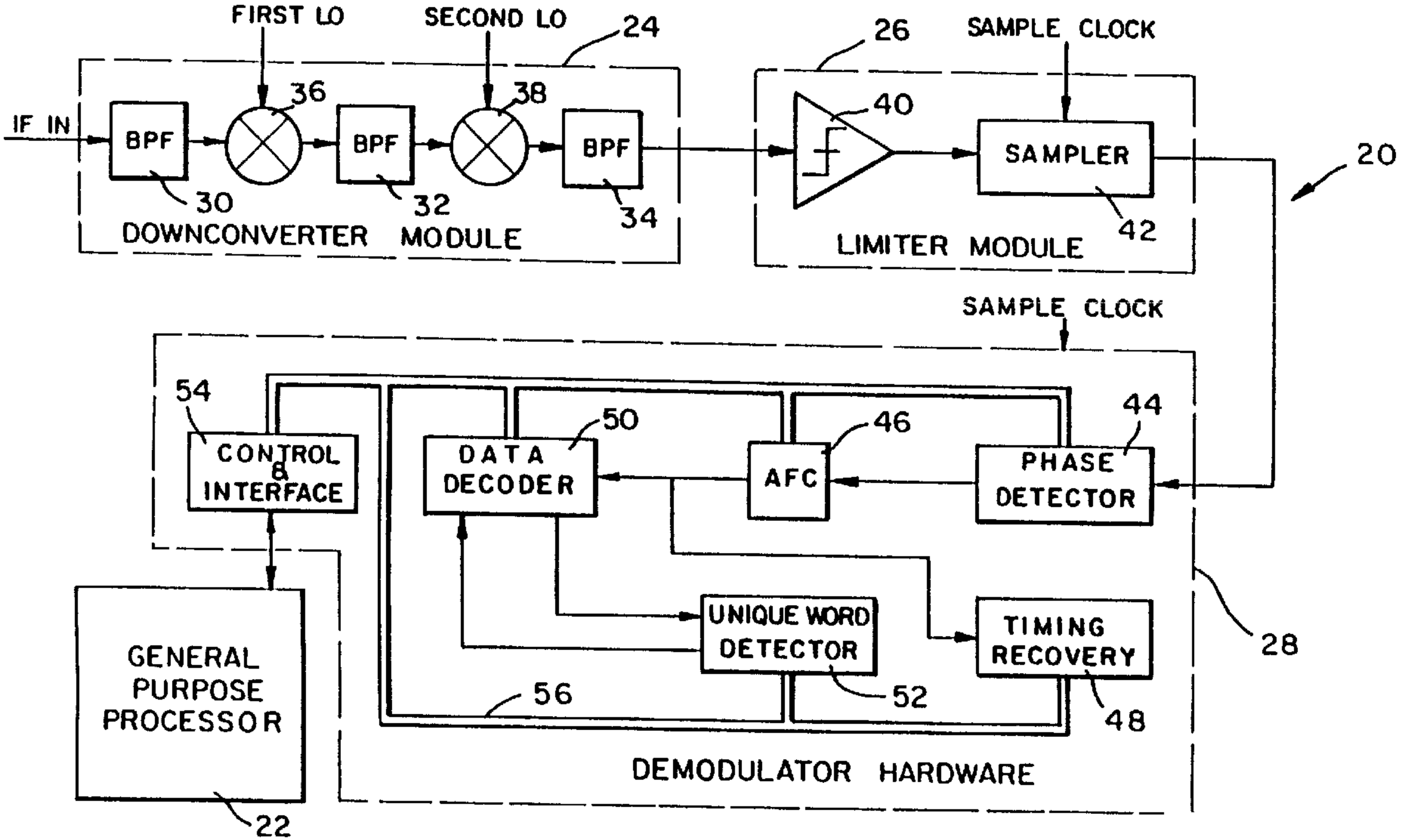
FIRST LO
SECOND LO
24
26
SAMPLE CLOCK
IF IN
BPF
36
BPF
38
BPF
40
SAMPLER
20
30
32
34
42
DOWNCONVERTER MODULE
LIMITER MODULE
SAMPLE CLOCK
54
44
50
46
CONTROL & INTERFACE
DATA DECODER
AFC
PHASE DETECTOR
UNIQUE WORD DETECTOR
TIMING RECOVERY
28
GENERAL PURPOSE PROCESSOR
56
52
48
DEMODULATOR HARDWARE
22