(12) INTERNATIONAL APPLICATION PUBLISHED UNDER THE PATENT COOPERATION TREATY (PCT)

(19) World Intellectual Property Organization
International Bureau

(43) International Publication Date
10 October 2002 (10.10.2002)

PCT

(10) International Publication Number
WO 02/079858 A2

(51) International Patent Classification[7]: G02B 27/00

(21) International Application Number: PCT/US02/09706

(22) International Filing Date: 27 March 2002 (27.03.2002)

(25) Filing Language: English

(26) Publication Language: English

(30) Priority Data:
60/279,912 29 March 2001 (29.03.2001) US

(71) Applicants *(for all designated States except US)*: **ELUMENS CORPORATION** [US/US]; Suite 211, 1100 Crescent Green, Cary, NC 27511 (US). **MCCONVILLE, David** [US/US]; 414 Haywood Road, Asheville, NC 28806 (US).

(72) Inventors; and

(75) Inventors/Applicants *(for US only)*: **COLUCCI, D'nardo** [US/US]; 27 Maple Place, Minneapolis, MN 55401 (US). **BALU, Suresh** [IN/US]; 102 Charlesberry Circle, Chapel Hill, NC 27517 (US). **ZOBEL, Richard, W., Jr.** [US/US]; 644 South Lakeside Drive, Raleigh, NC 27606 (US). **IDASZAK, Raymond, L.** [US/US]; 1001 Napa Place, Apex, NC 27502 (US).

(74) Agent: **MOORE, D., Scott**; Myers Bigel Sibley & Sajovec, P.A., P. O. Box 37428, Raleigh, NC 27627 (US).

(81) Designated States *(national)*: AE, AG, AL, AM, AT, AU, AZ, BA, BB, BG, BR, BY, BZ, CA, CH, CN, CO, CR, CU, CZ, DE, DK, DM, DZ, EC, EE, ES, FI, GB, GD, GE, GH, GM, HR, HU, ID, IL, IN, IS, JP, KE, KG, KP, KR, KZ, LC, LK, LR, LS, LT, LU, LV, MA, MD, MG, MK, MN, MW, MX, MZ, NO, NZ, OM, PH, PL, PT, RO, RU, SD, SE, SG, SI, SK, SL, TJ, TM, TN, TR, TT, TZ, UA, UG, US, UZ, VN, YU, ZA, ZM, ZW.

(84) Designated States *(regional)*: ARIPO patent (GH, GM, KE, LS, MW, MZ, SD, SL, SZ, TZ, UG, ZM, ZW), Eurasian patent (AM, AZ, BY, KG, KZ, MD, RU, TJ, TM), European patent (AT, BE, CH, CY, DE, DK, ES, FI, FR, GB, GR, IE, IT, LU, MC, NL, PT, SE, TR), OAPI patent (BF, BJ, CF, CG, CI, CM, GA, GN, GQ, GW, ML, MR, NE, SN, TD, TG).

Published:
— *without international search report and to be republished upon receipt of that report*
— *entirely in electronic form (except for this front page) and available upon request from the International Bureau*

For two-letter codes and other abbreviations, refer to the "Guidance Notes on Codes and Abbreviations" appearing at the beginning of each regular issue of the PCT Gazette.

WO 02/079858 A2

(54) Title: METHODS AND SYSTEMS FOR PROJECTING IMAGES AT GREATER THAN 180 DEGREES

(57) Abstract: An optical projection system includes an image source that is configured to generate an array of image pixels. A lens assembly is configured to project the array of image pixels onto a hemispherical surface at a projection angle greater than 180°. The lens assembly may include a wide-angle lens assembly and an image relay lens assembly that is configured to reduce dispersion in the array of image pixels between the image source and the wide-angle lens assembly. The wide-angle lens assembly may include a meniscus lens assembly and a wavefront shaping lens assembly. The lens assembly may be further configured to project the array of image pixels onto the hemispherical surface such that there is a constant angular separation between adjacent image pixels. An optical projection system may also include two image sources that are configured to generate first and second arrays of image pixels and two lens assemblies that are configured to respectively project the first and second arrays of image pixels at projection angles that are greater than 180° onto a surface in opposite directions of each other. The combination of the first and second arrays of image pixels may cover a continuous, 360° portion of the hemispherical surface.

METHODS AND SYSTEMS FOR PROJECTING IMAGES AT GREATER THAN 180 DEGREES

CROSS-REFERENCE TO PROVISIONAL APPLICATION

This application claims the benefit of Provisional Application Serial No. 60/279,912, filed March 29, 2001, entitled *Methods and Systems for Projecting Images at Greater than 180 Degrees*, the disclosure of which is hereby incorporated herein by reference.

BACKGROUND OF THE INVENTION

The present invention relates to optical projection systems and methods, and, more particularly, to hemispherical optical projection systems and methods.

Immersive virtual environments have many applications in such fields as simulation, visualization, and space design. A goal of many of these systems is to provide the viewer with a full sphere (180° x 360°) of image. In achieving this goal, there is traditionally a trade-off between complexity and cost. Fully immersive systems using rear projection typically use multiple projectors placed around the display surface. These systems, however, may require significant alignment and upkeep, including edge blending and color matching. They also may be expensive and may require a room that is on average twice as big as the display surface. Multi-projector front projection environments typically do not require the extra room of rear projection environments, but generally can not achieve the same level of immersion and still may suffer the same cost and alignment problems. Single projector, front projection environments may be lower cost and may also be more readily aligned, but these systems may not provide the user with greater than a 170° field of view (FOV) because the viewer may need to be located behind the projector. For example, as

shown in **FIG. 1**, a viewer that is located behind a projector with an angle of projection of approximately 170° achieves an effective FOV of approximately 125°.

SUMMARY OF THE INVENTION

According to some embodiments of the present invention, an optical projection system comprises an image source that is configured to generate an array of image pixels. A lens assembly is configured to project the array of image pixels onto a surface at a projection angle greater than 180°. This may allow a viewer located behind the optical projection system to achieve a full hemispherical field of view, *i.e.*, at least a 180° field of view.

The lens assembly may be further configured to project the array of image pixels onto the surface such that there is a constant angular separation between adjacent projected pixels. Moreover, the lens assembly may project the array of image pixels onto surfaces, such as hemispherical surfaces, of varying radii.

In various embodiments of the present invention, the image source may comprise a cathode ray tube, a field emitter array, and/or any other two-dimensional image array. The image source may also comprise a digital light processing (DLP) unit, a liquid crystal display (LCD) unit, and/or a liquid crystal on silicon (LCOS) unit.

In still other embodiments of the present invention, the lens assembly may comprise a wide-angle lens assembly and an image relay lens assembly that is configured to optically relay the array of image pixels between the image source and the wide-angle lens assembly. In particular embodiments of the present invention, the wide-angle lens assembly may comprise a diffractive optical element that is configured to provide both color correction and higher order wavefront shaping.

In further embodiments of the present invention, the optical projection system may comprise a dome that has an inner surface. The lens assembly may be configured to project the array of image pixels onto the inner surface of the dome at a projection angle greater than 180°.

To provide an immersive effect, for example, other embodiments of the present invention may comprise two image sources that are configured to generate first and second arrays of image pixels and two lens assemblies that are configured to respectively project the first and second arrays of image pixels at projection angles

that are greater than 180° onto a surface in opposite directions of each other. The combination of the first and second arrays of image pixels may cover a continuous, 360° portion of the hemispherical surface.

Although described primarily above with respect to system and/or apparatus embodiments of the present invention, it should be understood that the present invention may be embodied as methods of optical projection.

BRIEF DESCRIPTION OF THE DRAWINGS

Other features of the present invention will be more readily understood from the following detailed description of specific embodiments thereof when read in conjunction with the accompanying drawings, in which:

FIG. 1 is a diagram that illustrates a conventional optical projection system that projects an array of image pixels at an angle of projection less than 180°;

FIGS. 2A and **2B** are block diagrams that illustrate optical projection systems and methods for projecting an array of image pixels at an angle of projection greater than 180° in accordance with some embodiments of the present invention;

FIG. 3 is a schematic diagram that illustrates embodiments of an image source and lens assembly that may be used in optical projection systems and methods for projecting an array of image pixels at an angle of projection greater than 180° in accordance with some embodiments of the present invention;

FIG. 4 is a diagram that illustrates an optical projection system, according to some embodiments of the present invention, projecting an array of image pixels at an angle of projection of 240° to provide a viewer with a full hemispherical field of view; and

FIG. 5 is a diagram that illustrates an optical projection system, according to some embodiments of the present invention, incorporating dual image sources and lens assemblies projecting arrays of image pixels at an angle of projection of 240° to provide a viewer with a 360° field of view.

DETAILED DESCRIPTION OF PREFERRED EMBODIMENTS

While the invention is susceptible to various modifications and alternative forms, specific embodiments thereof are shown by way of example in the drawings and will herein be described in detail. It should be understood, however, that there is

no intent to limit the invention to the particular forms disclosed, but on the contrary, the invention is to cover all modifications, equivalents, and alternatives falling within the spirit and scope of the invention as defined by the claims. Like reference numbers signify like elements throughout the description of the figures.

Referring now to **FIGS. 2A** and **2B**, a tiltable optical projection system having constant angular separation of projected pixels, according to some embodiments of the present invention, will now be described. An optical projection system **10** projects an array of image pixels **12** having constant angular separation among adjacent pixels as indicated by the angle θ, which is constant among adjacent pixels **12a - 12n**. Moreover, the optical projection system **10** is configured to project the array of image pixels **12** at a projection angle greater than 180°. As shown in **FIGS. 2A** and **2B**, the optical projection system **10** projects the array of image pixels **12** having constant angular separation onto the inner surface **20a** of a truncated hemispherical dome **20**. The greater than 180° optical projection system **10** may be referred to as an F-θ inverse telephoto lens, where f is the focal length of the lens and θ is the angle of proejction. Although embodiments of the present invention are illustrated herein in the context of projecting image pixels onto a hemispherical surface, it will be understood that any screen surface may be used, including, but not limited to, hyper-hemispherical surfaces and elliptical surfaces.

By maintaining constant angular separation among adjacent pixels, a low distortion image may be projected by the optical projection system **10** onto domes of varying radii, which is illustrated by surface **20'**. Domes of radii from 4 to 8 meters may be accommodated in accordance with some embodiments of the present invention. To maintain low distortion with constant angle of separation, the optical projection system **10** may be mounted at the center of the inner dome surface **20a** so as to radially project the array of image pixels **12** onto the inner dome surface.

Still referring to **FIGS. 2A** and **2B**, some embodiments of the optical projection system **10** also comprise means for tilting or aiming the array of image pixels **12** so that the optical projection system **10** projects the array of pixels onto a plurality of selectable positions on the inner dome surface **20a**. For example, as shown in **FIGS. 2A** and **2B**, the projecting optics **14** may be pivotally mounted on a base **16** using a pivot **18**. The base **16** is located on the floor **24** of the dome **20**. The

pivot **18** may allow pivoting within a plane or in multiple planes. The design of the pivot **18** is generally known to those skilled in the art and need not be described further herein.

By incorporating tilting or aiming means, the optical projection system **10** may project vertically upward in a planetarium projection as shown in **FIG. 2A** or may project at an angle (for example 45 degrees) from vertical in a theater projection position, as shown in **FIG. 2B**. Typically, when projecting in a planetarium style as shown in **FIG. 2A**, the audience area **22** surrounds the projection system **10**. In contrast, when projecting theater style, the audience area **22'** is typically behind the optical projection system **10** and the audience area **22'** is raised so that the audience can see the entire field of view in front of them. Thus, different audience configurations may be accommodated.

The dome **20** may be constructed for portability and ease of assembly and disassembly. Exemplary embodiments of the dome **20** are described in U. S. Patent No. 5,724,775, entitled "*Multi-Pieced, Portable Projection Dome and Method of Assembling the Same*" and assigned to the assignee of the present application, the disclosure of which is hereby incorporated herein by reference.

Referring now to **FIG. 3**, a lens assembly **30** that may be used in the optical projection system **10** to project an array of image pixels at a projection angle greater than 180°, in accordance with some embodiments of the present invention, will now be described. The lens assembly **30** comprises an image relay lens assembly **32** and a wide-angle lens assembly **34** that are positioned in a path of an array of image pixels. The lens assembly **30** is configured such that the array of image pixels may be projected at a projection angle greater than 180°. The array of image pixels is generated by an image source **36**. In accordance with various embodiments of the present invention, the image source **36** may be a cathode ray tube, a field emitter array, or any other two-dimensional image array. The image source may also comprise a digital light processing (DLP) unit, a liquid crystal display (LCD) unit, and/or a liquid crystal on silicon (LCOS) unit. The array of image pixels may be formed by a single light path for projecting gray scale images, a single light path for projecting color images, or by combining separate red, green, and blue light paths as described in U. S. Patent No. 5,762,413 (hereinafter "'413 patent"), entitled "Tiltable

Hemispherical Optical Projection Systems and Methods Having Constant Angular Separation of Projected Pixels" and assigned to the assignee of the present application, the disclosure of which is hereby incorporated herein by reference.

The wide-angle lens assembly **34** comprises a lens assembly **38**, a wavefront shaping lens assembly **42**, and a meniscus lens assembly **44**. The wavefront shaping lens assembly **42** may comprise a diffractive optical element **46** that may allow for color correction and/or higher order wavefront shaping based on the field of view to be provided. Exemplary embodiments of the wavefront shaping lens assembly **42**, and the meniscus lens assembly **44** are described in detail in the '413 patent.

Conventional inverse telephoto projection systems may exhibit the general characteristic that the back focal distance, (*i.e.*, the farthest distance between a lens in the lens assembly and the image source) is longer than the effective focal length (*i.e.*, the focal length of a theoretical single element lens having the same optical characteristics as the lens assembly) because of space occupied by optical and mechanical components. Advantageously, in accordance with some embodiments of the present invention, the image relay lens assembly **32**, comprising lenses **48** and **52**, may optically relay the array of image pixels between the image source **36** and the wide-angle lens assembly **34**. The dispersion in the array of image pixels at an intermediate image plane near the wide angle lens assembly **34** is similar to the dispersion in the array of image pixels near the image source **36**. Advantageously, this may allow the conflict between back focal distance and effective focal length to be reduced.

Referring now to **FIG. 4**, an optical projection system **60**, in accordance with some embodiments of the present invention, is illustrated as projecting an array of image pixels onto an inner surface of a hemispherical dome structure **62** at a projection angle greater than 180°. The optical projection system **60** may be implemented as discussed above with respect to **FIGS. 2** and **3**. As shown in **FIG. 4**, the optical projection system **60** projects the array of image pixels at a projection angle of approximately 240°. Advantageously, this may allow a viewer located behind the optical projection system **60** to achieve a full hemispherical field of view, *i.e.*, at least a 180° field of view.

In other embodiments of the present invention illustrated in **FIG. 5**, two optical projection systems **70** and **72**, each of which may be implemented as discussed above with respect to **FIGS. 2** and **3**, are configured to project first and second arrays of image pixels onto the inner surface of a hemispherical dome structure **74** at respective projection angles greater than 180°. As shown in **FIG. 5**, each optical projection system **70** and **72** projects a respective array of image pixels at a projection angle of approximately 240°. The combination of the first and second arrays of image pixels projected by the optical projection systems **70** and **72** covers a continuous, 360° portion of the hemispherical inner surface of the dome structure **74**. Advantageously, this may allow a viewer located between the two optical projection systems **70** and **72** to achieve a full 360° field of view without casting a shadow.

In some embodiments of the present invention illustrated in **FIGS. 4** and **5**, one or more of the optical projection systems **60**, **70**, and **72** may respectively project an array of image pixels at a horizontal projection angle greater than 180° and a vertical projection angle of approximately 165°. Such projection may make efficient use of a 4:3 image aspect ratio often used in video presentations.

Many variations and modifications can be made to the preferred embodiments without substantially departing from the principles of the present invention. All such variations and modifications are intended to be included herein within the scope of the present invention, as set forth in the following claims.

CLAIMS

We claim:

1. An optical projection system, comprising:

an image source that is configured to generate an array of image pixels;

a lens assembly that is configured to project the array of image pixels onto a surface at a projection angle greater than 180 degrees, the lens assembly comprising:

a wide angle lens assembly; and

an image relay lens assembly that is between the image source and the wide angle lens assembly.

2. The optical projection system of Claim 1, wherein the lens assembly is further configured to project the array of image pixels onto the surface such that there is a constant angular separation between adjacent projected pixels.

3. The optical projection system of Claim 1, wherein the surface is a hemispherical surface.

4. The optical projection system of Claim 3, wherein the lens assembly is further configured to project the array of image pixels onto hemispherical surfaces of varying radii.

5. The optical projection system of Claim 1, wherein the image source comprises a cathode ray tube.

6. The optical projection system of Claim 1, wherein the image source comprises a field emitter array.

7. The optical projection system of Claim 1, wherein the image source comprises a unit selected from the group of units consisting of a digital light processing unit, a liquid crystal display unit, and a liquid crystal on silicon unit.

8. The optical projection system of Claim 1, wherein the wide angle lens assembly comprises:

a diffractive optical element that is configured to provide color correction and higher order wavefront shaping.

9. The optical projection system of Claim 1, further comprising:

a dome that comprises an inner surface; and

wherein the lens assembly is further configured to project the array of image pixels onto the inner surface of the dome at a projection angle greater than 180 degrees.

10. The optical projection system of Claim 1, further comprising:

means for aiming the array of image pixels at a selectable portion of the surface.

11. An optical projection system, comprising:

a first image source that is configured to generate a first array of image pixels;

a first lens assembly comprising a first plurality of lenses positioned in series, that is configured to project the first array of image pixels onto a surface at a projection angle greater than 180 degrees in a first direction;

a second image source that is configured to generate a second array of image pixels; and

a second lens assembly comprising a second plurality of lenses positioned in series that is configured to project the second array of image pixels onto the surface at a projection angle greater than 180 degrees in a second direction, opposite the first direction.

12. The optical projection system of Claim 11, wherein a combination of the first array of image pixels and the second array of image pixel covers a continuous, 360 degree portion of the surface.

13. The optical projection system of Claim 11, wherein the first and second lens assemblies are further configured to project the first and second arrays of image

pixels onto the surface such that there is a constant angular separation between adjacent projected pixels.

14. An optical projection system, comprising:

an image source that is configured to generate an array of image pixels;

a lens assembly that is configured to project the array of image pixels onto a surface at a projection angle greater than 180 degrees, the lens assembly comprising:

a wide angle lens assembly that comprises a diffractive optical element that is configured to provide color correction and higher order wavefront shaping.

15. The optical projection system of Claim 14, further comprising:

an image relay lens assembly that is between the image source and the wide angle lens assembly.

16. The optical projection system of Claim 14, wherein the lens assembly is further configured to project the array of image pixels onto the surface such that there is a constant angular separation between adjacent projected pixels.

17. The optical projection system of Claim 14, wherein the surface is a hemispherical surface.

18. The optical projection system of Claim 14, further comprising:

a dome that comprises an inner surface; and

wherein the lens assembly is further configured to project the array of image pixels onto the inner surface of the dome at a projection angle greater than 180 degrees.

19. A method of projecting an image, comprising:

projecting an array of image pixels onto a surface from a lens assembly comprising a plurality of lenses positioned in series at a projection angle greater than 180 degrees.

20. The method of Claim 19, wherein projecting the array of image pixels comprises:

projecting the array of image pixels onto the surface from the lens assembly comprising the plurality of lenses positioned in series at the projection angle greater than 180 degrees such that there is a constant angular separation between adjacent projected pixels.

21. The method of Claim 19, wherein the surface is a hemispherical surface.

22. The method of Claim 21, wherein projecting the array of image pixels comprises:

projecting the array of image pixels onto hemispherical surfaces of varying radii from the lens assembly at the projection angle greater than 180 degrees.

23. The method of Claim 19, wherein the lens assembly comprises a wide-angle lens assembly, the method further comprising:

optically relaying the array of image pixels between an image source and the wide-angle lens assembly.

24. The method of Claim 19, further comprising:

aiming the lens assembly at a selectable portion of the surface.

25. The method of Claim 19, wherein the surface is the inner surface of a dome.

26. The method of Claim 19, wherein projecting the array of image pixels comprises projecting a first array of image pixels onto the surface from a first lens assembly comprising a first plurality of lenses positioned in series at a projection angle greater than 180 degrees in a first direction, the method further comprising:

projecting a second array of image pixels onto the surface from a second lens assembly comprising a second plurality of lenses positioned in series at a projection angle greater than 180 degrees in a second direction, opposite the first direction.

27. The method of Claim 26, wherein a combination of the first array of image pixels and the second array of image pixels covers a continuous, 360 degree portion of the surface.

28. An optical projection system, comprising:

means for providing an array of image pixels;

means for projecting the array of image pixels onto a surface from a lens assembly at a projection angle greater than 180 degrees, the lens assembly comprising:

a wide angle lens assembly; and

an image relay lens assembly that is between the image source and the wide angle lens assembly.

29. The optical projection system of Claim 28, wherein the means for projecting comprises:

means for projecting the array of image pixels onto the surface such that there is a constant angular separation between adjacent projected pixels.

30. The optical projection system of Claim 28, wherein the surface is a hemispherical surface.

31. The optical projection system of Claim 30, wherein the means for projecting comprises:

means for projecting the array of image pixels onto hemispherical surfaces of varying radii at the projection angle greater than 180 degrees.

32. The optical projection system of Claim 28, wherein the image source comprises a cathode ray tube.

33. The optical projection system of Claim 28, wherein the image source comprises a field emitter array.

34. The optical projection system of Claim 28, wherein the image source comprises a unit selected from the group of units consisting of a digital light processing unit, a liquid crystal display unit, and a liquid crystal on silicon unit.

35. The optical projection system of Claim 28, wherein the wide angle lens assembly comprises:

a diffractive optical element that is configured to provide color correction and higher order wavefront shaping.

36. The optical projection system of Claim 28, further comprising:

a dome that comprises an inner surface; and

wherein the means for projecting comprises means for projecting the array of image pixels onto the inner surface of the dome at a projection angle greater than 180 degrees.

37. The optical projection system of Claim 28, further comprising:

means for aiming the array of image pixels at a selectable portion of the surface.

38. An optical projection system, comprising:

means for providing a first array of image pixels;

means for projecting the first array of image pixels onto a surface from a first lens assembly comprising a first plurality of lenses positioned in series at a projection angle greater than 180 degrees in a first direction;

means for providing a second array of image pixels; and

means for projecting the second array of image pixels onto the surface from a second lens assembly comprising a second plurality of lenses positioned in series at a projection angle greater than 180 degrees in a second direction, opposite the first direction.

39. The optical projection system of Claim 38, wherein a combination of the first array of image pixels and the second array of image pixel covers a continuous, 360 degree portion of the surface.

40. The optical projection system of Claim 38, wherein the means for projecting the first array of image pixels comprises means for projecting the first array of image pixels onto the surface such that there is a constant angular separation between adjacent projected pixels, and wherein the means for projecting the second array of image pixels comprises means for projecting the second array of image pixels onto the surface such that there is constant angular separation between adjacent projected pixels.

41. An optical projection system, comprising:

means for providing an array of image pixels;

means for projecting the array of image pixels onto a surface from a lens assembly at a projection angle greater than 180 degrees, the lens assembly comprising:

a wide angle lens assembly that comprises a diffractive optical element that is configured to provide color correction and higher order wavefront shaping.

42. The optical projection system of Claim 41, further comprising:

an image relay lens assembly that is between the means for providing the array of image pixels and the wide angle lens assembly.

43. The optical projection system of Claim 41, wherein the means for projecting comprises:

means for projecting the array of image pixels such that there is a constant angular separation between adjacent projected pixels.

44. The optical projection system of Claim 41, wherein the surface is a hemispherical surface.

45. The optical projection system of Claim 41, further comprising:

a dome that comprises an inner surface; and

wherein the means for projecting comprises means for projecting the array of image pixels onto the inner surface of the dome at a projection angle greater than 180 degrees.

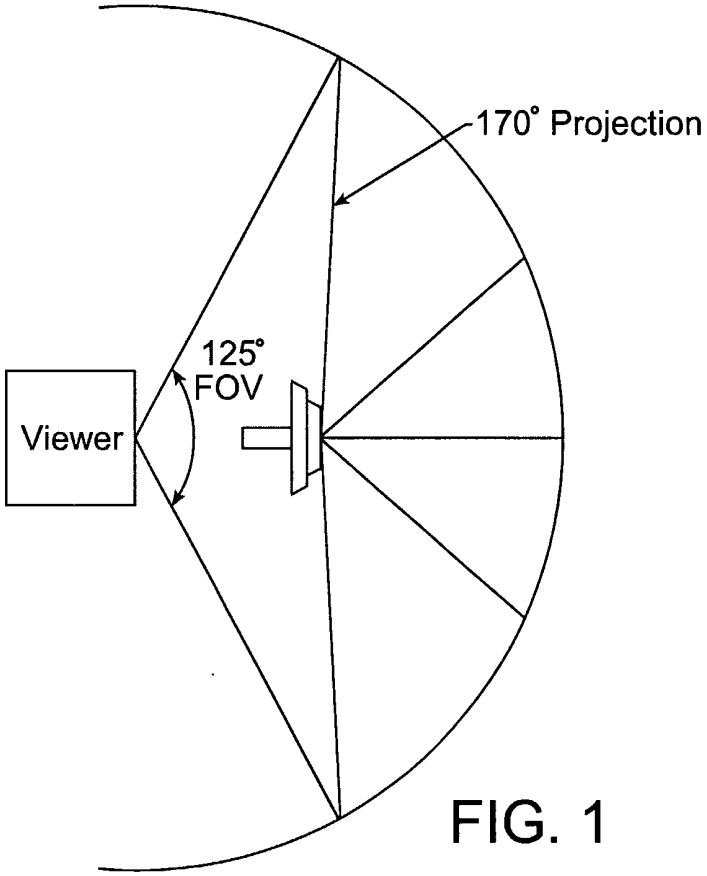

FIG. 1

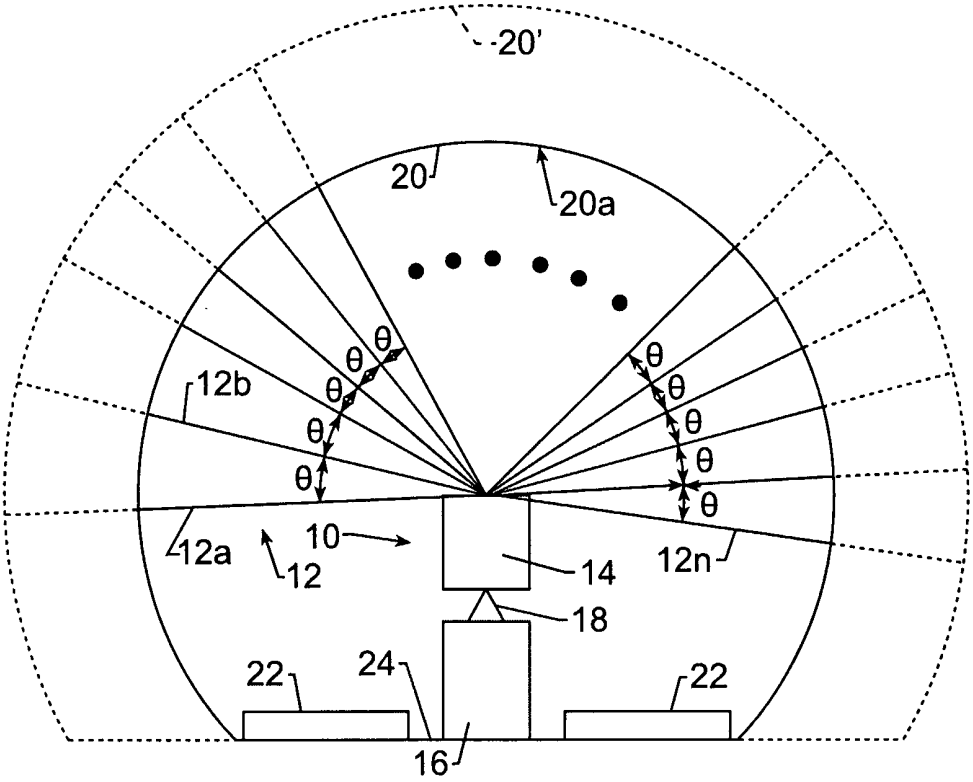
20'
20
20a
θ
12b
12a
12
10
14
12n
18
22
24
16

FIG. 2A

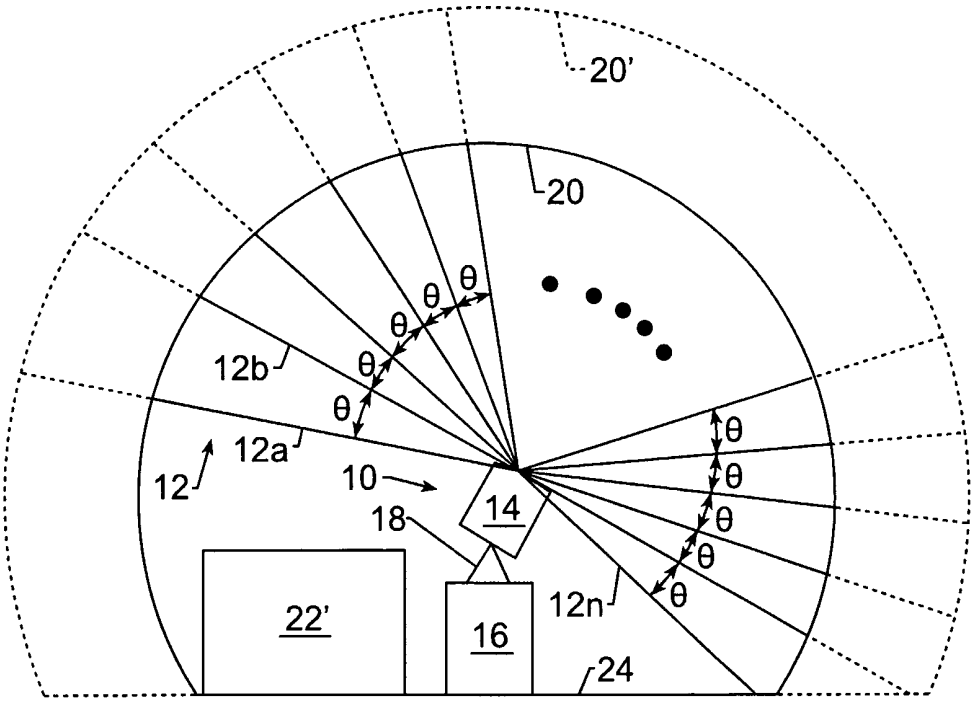
20'
20
θ
12b
12a
12
10
14
18
22'
16
12n
24

FIG. 2B

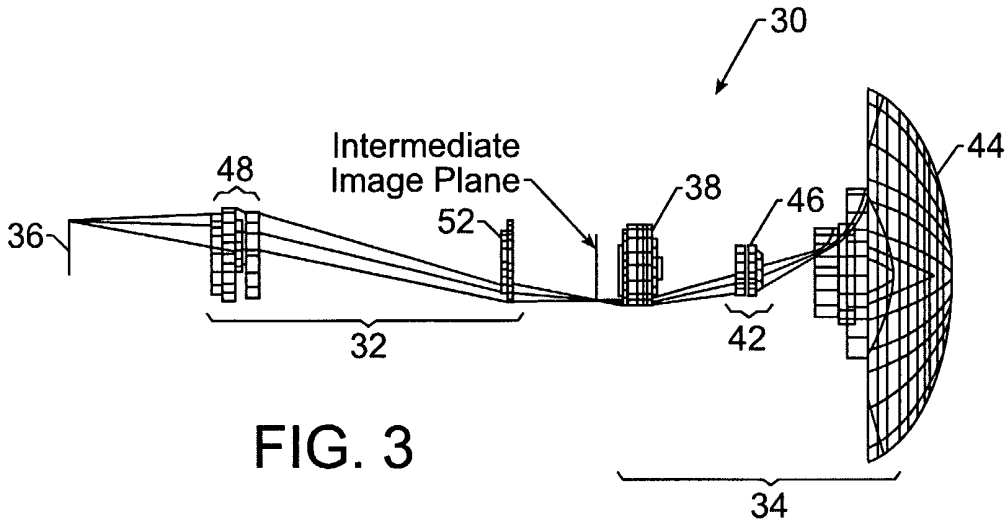
30
Intermediate
Image Plane
48
52
38
46
44
36
32
42
34

FIG. 3

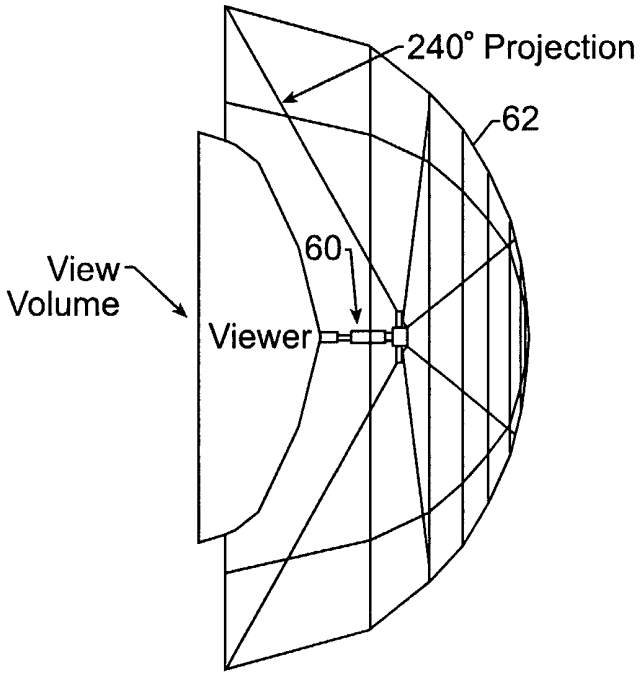
240° Projection
62
60
View
Volume
Viewer

FIG. 4

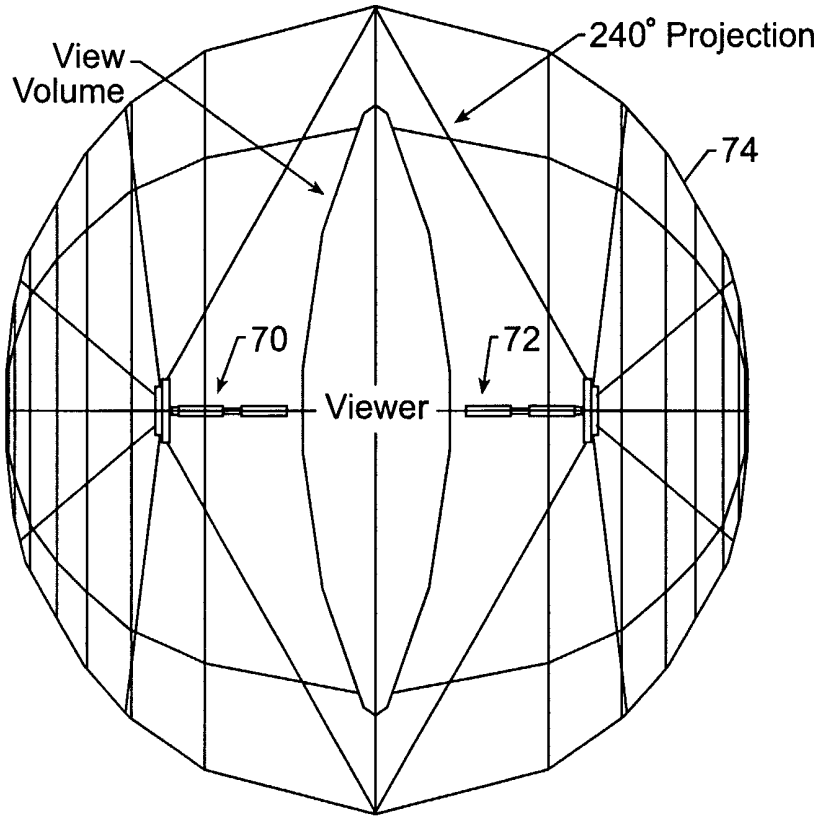

FIG. 5