No. 666,429. Patented Jan. 22, 1901.

J. T. LINDSTROM.

VALVE MECHANISM FOR ENGINES.

(Application filed Oct. 30, 1899.)

(No Model.) 3 Sheets—Sheet 1.

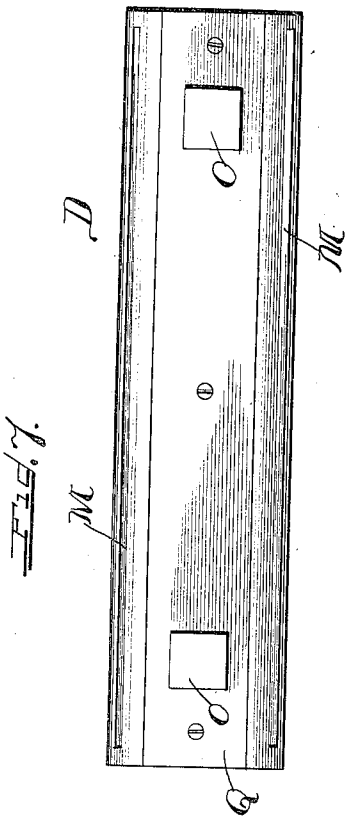

Fig. 2.

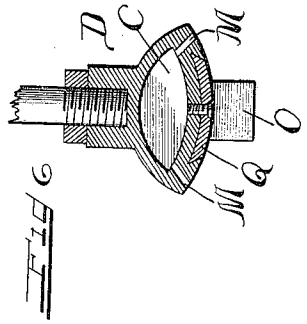

Fig. 3.

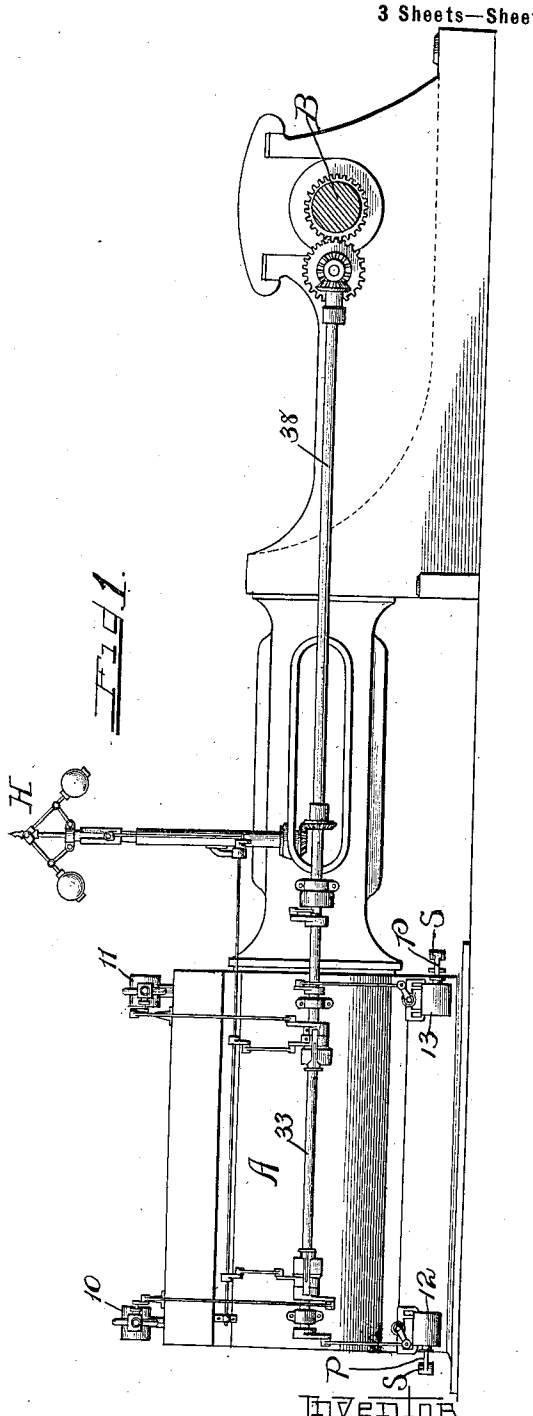

Fig. 1.

Witnesses—
J. B. Stein
Ira D. Perry

Inventor—
John T. Lindstrom
By Brown & Darby
Attorneys

No. 666,429. Patented Jan. 22, 1901.

J. T. LINDSTROM.

VALVE MECHANISM FOR ENGINES.

(Application filed Oct. 30, 1899.)

(No Model.) 3 Sheets—Sheet 2.

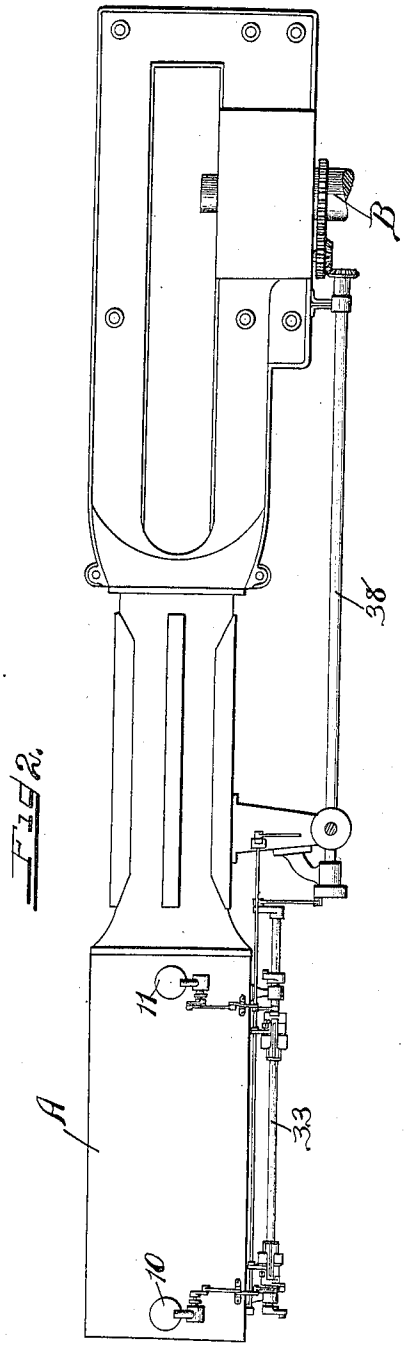

Fig 2.

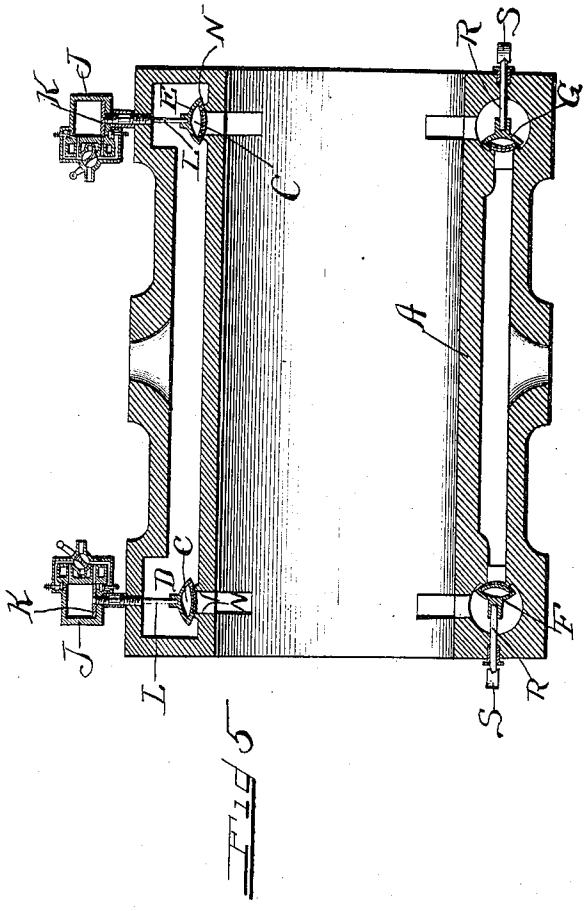

Fig 5

Witnesses—
J B Weir
Ira D. Perry

Inventor—
John T. Lindstrom
By Brown & Darby
Attorneys

No. 666,429. Patented Jan. 22, 1901.

J. T. LINDSTROM.

VALVE MECHANISM FOR ENGINES.

(Application filed Oct. 30, 1899.)

No Model.) 3 Sheets—Sheet 3.

Fig. 3.

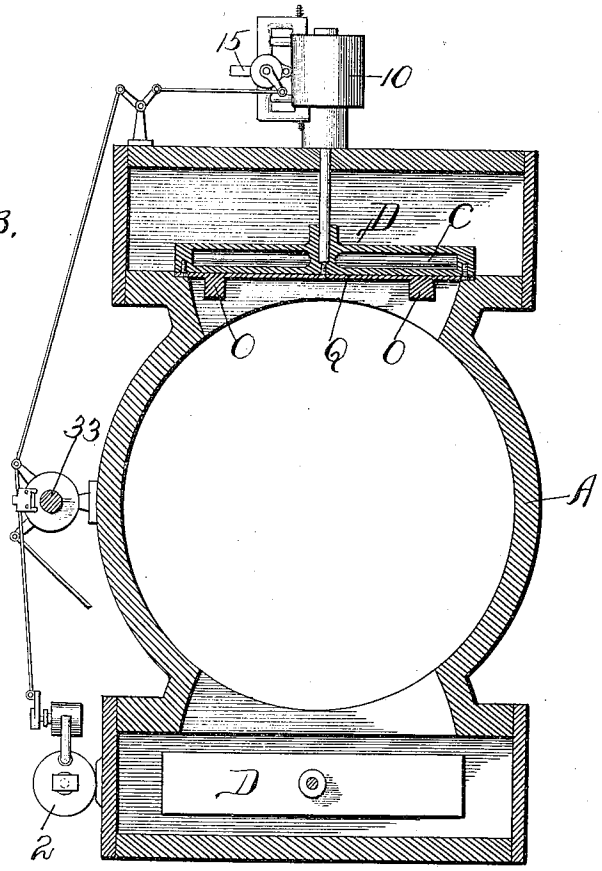

Fig. 4.

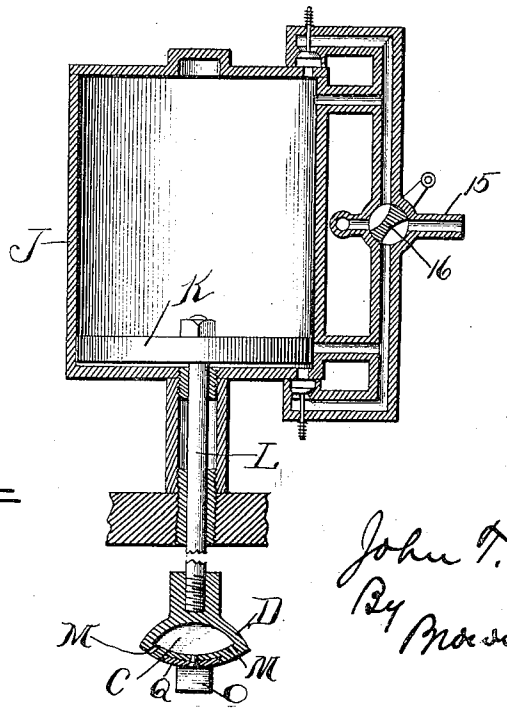

Witnesses.
J. B. Stein
Ira D. Perry

Inventor.
John T. Lindstrom
By Mason & Darby
Attorneys

UNITED STATES PATENT OFFICE.

JOHN T. LINDSTROM, OF ALLENTOWN, PENNSYLVANIA.

VALVE MECHANISM FOR ENGINES.

SPECIFICATION forming part of Letters Patent No. 666,429, dated January 22, 1901.

Application filed October 30, 1899. Serial No. 735,221. (No model.)

To all whom it may concern:

Be it known that I, JOHN T. LINDSTROM, a citizen of the United States, residing at Allentown, in the county of Lehigh and State of Pennsylvania, have invented a new and useful Valve Mechanism for Steam-Engines, of which the following is a specification.

This invention relates to valve mechanism for steam-engines, and is designed as an improvement upon the construction shown, described, and claimed in my Patent No. 623,251, granted to me April 18, 1899.

One object of the invention is to provide a valve mechanism for steam-engines which will be simple, efficient, and positive in operation and wherein the use of wrist-plates and connecting-rods such as are usually employed in steam-engines of the Corliss type is avoided.

A further object of the invention is to provide an arrangement of valve-actuating mechanism whereby the use of operating-rods and levers is avoided.

A further object of the invention is to provide a valve mechanism wherein the valve is raised from its seat by the direct application of power.

A further object of the invention is to guide the valve during the movements thereof.

A further object of the invention is to avoid the noise incident to the pounding or seating of the valve.

Other objects of the invention will appear more fully hereinafter.

The invention consists, substantially, in the construction, combination, location, and relative arrangement, all as will be more fully hereinafter set forth, as shown in the accompanying drawings and finally pointed out in the claims.

Referring to the accompanying drawings, and to the various views and reference signs appearing thereon, Figure 1 is a view in side elevation, parts in vertical section, of a type of steam-engine, showing the application thereto of a construction embodying the principles of my invention. Fig. 2 is a plan view of the construction shown in Fig. 1. Fig. 3 is a transverse section showing the arrangement of supply-valve and its operating mechanism. Fig. 4 is an enlarged broken detail view, in central longitudinal section, of the supply-valve-actuating cylinder and piston, showing the connection of the piston with the valve. Fig. 5 is a longitudinal central section of the main cylinder, showing the arrangement of the supply and exhaust valves and their operating mechanism. Fig. 6 is an enlarged broken detail view in cross-section of a supply or exhaust valve. Fig. 7 is an enlarged detail detached view, in bottom plan, of a supply or exhaust valve.

The same part is designated by the same reference-sign wherever it occurs throughout the several views.

Reference sign A designates the steam-cylinder of an engine; B, the main cylinder-shaft; D E, the main supply-valves, one arranged at each end of the cylinder, and F G the main exhaust-valves. These parts may be of the usual or any suitable well-known type of construction and arrangement.

In the operation of steam-engines, and particularly engines of the Corliss type, it is usual to provide a rocking or wrist plate and connect the same by means of links or connecting-rods with the valves for actuating the latter. Such construction and arrangement, however, results in a comparatively slow movement of the valves in opening and closing. This is objectionable for the reason that in order to secure the most efficient operation of the engine the steam-inlet valves should be quickly opened to their fullest extent and as quickly closed, and the exhaust-valve at one end of the cylinder should also be quickly and fully opened immediately upon the opening of the steam-inlet valve at the other end of the cylinder. These results are not efficiently secured in the constructions employing the wrist-plate and link or rotating connections therefrom to the valves. Moreover, in such constructions it is difficult to vary the point of cut-off with variations of speed without the provision of special and complicated arrangements of connections. In my prior patent I have shown, described, and claimed a construction and arrangement wherein the objections above noted are avoided and wherein the use of a rocking wrist-plate and the special cut-off-varying connections are avoided and dispensed with. In said patent the desired objects are attained by providing motors for actuating the main

supply and exhaust valves, a separate motor being employed for each of the main cylinder-valves, the valve-operating motors comprising cylinders having pistons and rods, respectively, connected to crank-arms on the stems of the valves, a form of rotary valve being employed, and special appliances are shown, described, and claimed in said patent for automatically varying the point of cut-off of the supply-valve according to the speed of the engine. In the accompanying drawings I have shown a construction and arrangement embodying these general characteristics, wherein a shaft 38 is rotated through suitable gearing from the main shaft B of the engine, and a speed-governor H, of the usual or any suitable type of construction, is arranged to be actuated from shaft 38. Suitably connected to and actuated by shaft 38 is a rock-shaft 33, the connection being such that a rocking motion is imparted to said shaft 33 upon each complete rotation of shaft 38, and from shaft 33 the valves which control the main supply and exhaust valve controlling motors are actuated, as are also the automatic devices regulated by the speed of the engine, for automatically varying the point of cut-off of the main supply-valves according to the speed of the engine. As these automatic devices are fully shown and described in my said prior patent, and as the specific details of the construction thereof form no part of the present invention, I have not specifically shown and will not describe the same herein.

In my said prior patent I have shown the auxiliary motors through which the supply and exhaust valves are controlled as located beneath the base line or support of the engine. I have found that such arrangement and location of said auxiliary motors necessitates the employment of connecting rods or pitmen and crank-arms for connecting the operative parts of said motors with the valves, thus adding to the expense of construction, as well as to the liability of derangement of the apparatus, and besides it is frequently inconvenient to so locate and arrange said motors, as in many instances the space provided for the engine is too limited to accommodate such arrangement. Therefore I propose in the present case to locate each auxiliary motor adjacent to the particular valve which it is to control. Therefore I locate each auxiliary motor 10, 11, 12, and 13 adjacent to their respective valves, motors 10 and 11 being arranged at opposite ends of the main cylinder A, on one side of such cylinder, to control the main supply-valves, and the motors 12 and 13 are arranged at each end of the cylinder, on the opposite side thereof, to control the exhaust-valve.

In my prior patent I have shown rotary supply and exhaust valves—that is, valves which open or close the ports which they control by the rotary movement thereof. I have found that more satisfactory results are secured and a quicker response is attained by employing valves which move bodily toward and from their seats to open and close the ports which they control. I have also found that better results are attained in a construction wherein the power for operating the valves is applied directly to the valves instead of through intermediate connections, pitmen, levers, and crank-arms. Therefore in carrying out the principles of my invention the valves D, E, F, and G are arranged to be moved bodily toward and away from the ports which they respectively control and are connected directly to the operating part of their respective auxiliary motors. In Figs. 3, 4, and 5 this direct connection of the main supply-pistons is clearly shown, wherein the form of motor employed comprises an auxiliary cylinder J, in which operates a piston K, the rod L of which is directly connected to the valve D E, as the case may be. The operating medium for the motor is supplied through pipe 15 and suitable passages controlled by a valve 16, said valve being operated through suitably-arranged levers from rock-shaft 33 in the identical manner shown, described, and claimed in my prior patent. The form of auxiliary motor employed may also be identical with the construction shown in said patent, and the specific details thereof and the manner of their operation need not be more fully described herein, the essential feature of the present invention being the direct connection of the valve with the piston-rod L of the auxiliary motor.

It is obvious that other forms or types of motors may be employed without departure from the spirit of the invention, with the operating part thereof directly connected to the valve to move the same bodily toward or from its seat or the port which it controls.

It may sometimes be inconvenient to directly connect the valve with the piston or other moving part of the auxiliary motor, and this is particularly true in the case of the exhaust-valve. In such case the stem R of such valve may be connected through suitable pivoted levers S to the piston-rods T of the auxiliary motors 12 13.

In order to reduce the weight of the valves as much as possible, I prefer to make the valves hollow, as shown at C, and I provide the passages M, freely communicating at each side with the hollow space C of the valves, thus permitting the free access of the steam-pressure to and through the hollow space of the valves. I also prefer to form the valves somewhat oval-shaped in cross-section and somewhat wider than the seats or ports which said valves control, and I also prefer to slightly raise the seats of said valves at the edges thereof, as indicated at N, whereby the under surface of the valves project beyond their seats, and hence are exposed to the steam-pressure, which thus aids in the work of moving said valves away from their seats. In order to prevent any twist or rotary move-

ment of the valve during its actuation, I cast or otherwise form thereon suitable guiding projections or lugs O, which enter the port, and thereby guide the valve in its movements.

In order to prevent objectionable noise due to the pounding of the metallic surface of the valve against its seat when the valve is seated, I may, if desired, face the valve with a plate or sheet of some suitable material Q, such as hard rubber, fiberite, or other suitable material capable of withstanding the action of the steam.

Having now set forth the object and nature of my invention and an apparatus embodying the principles thereof, what I claim as new and useful and of my own invention, and desire to secure by Letters Patent, is—

1. In a steam-engine, a valve, means for moving the same bodily toward and from its seat, lugs or projections formed thereon, and arranged to enter the port which said valve controls, for guiding the same and preventing rotary movement thereof, as and for the purpose set forth.

2. In a steam-engine, main steam supply and exhaust valves, an independent auxiliary motor arranged adjacent to each supply-valve, each motor including a cylinder and piston, said piston being directly connected to its corresponding valve, a main engine drive-shaft, a rock-shaft actuated therefrom, and connections actuated by said rock-shaft for controlling each auxiliary motor, whereby variations in the speed of the engine control the action of said auxiliary motors, as and for the purpose set forth.

3. In a steam-engine, a main valve, a seat therefor, an auxiliary motor including a cylinder and piston, said piston being directly connected to said valve for moving the latter bodily toward and from its seat, guides for said valve for preventing rotary movement thereof, a main engine-shaft, a rock-shaft actuated thereby, and means operated by said rock-shaft for adjustably controlling said auxiliary motor, as and for the purpose set forth.

4. In a steam-engine, a main valve, a raised seat therefor, said valve being of greater transverse width than the width of said seat, an auxiliary motor comprising a cylinder and piston, said piston being directly connected to said valve for moving the same bodily toward and from said seat, means for preventing rotary movement of said valve, a rock-shaft, connections actuated by said rock-shaft for controlling said auxiliary motor, and means operated by the main engine-shaft for operating said rock-shaft, as and for the purpose set forth.

5. In a steam-engine, a main control-valve, said valve being formed hollow, and having openings or passages at each side thereof, an auxiliary motor comprising a cylinder and piston, said piston being directly connected to said valve for moving the same bodily toward and from its seat, a rock-shaft, connections actuated thereby for controlling said auxiliary motor, and means actuated by the main engine-shaft for actuating said rock-shaft, as and for the purpose set forth.

In witness whereof I have hereunto set my hand, this 20th day of October, 1899, in the presence of the subscribing witnesses.

JOHN T. LINDSTROM.

Witnesses:
E. C. SEMPLE,
S. E. DARBY.