United States Patent

Congelliere et al.

[15] **3,694,603**

[45] **Sept. 26, 1972**

[54] **PUSH-PUSH SWITCH WITH IMPROVED ALTERNATE MAKE AND BREAK LATCHING MECHANISM**

[72] Inventors: **Peter Congelliere,** 30636 Palos Verdes Drive, East, Inglewood, Calif. 90732; **Horace Buttner,** 1501 Palos Verdes Drive, North, Harbor City, Calif. 90710

[22] Filed: **Sept. 29, 1971**

[21] Appl. No.: **184,884**

[52] **U.S. Cl.**.....**200/153 J,** 200/64, 200/160

[51] **Int. Cl.**.....**H01h 3/52**

[58] **Field of Search**.....200/64, 51.16, 153 J, 156, 200/160, 166 CT

[56] **References Cited**

UNITED STATES PATENTS

2,935,894	5/1960	Coronado-Arce	200/160 X
2,945,111	7/1960	McCormick	200/64 X
2,959,656	11/1960	Bentsen	200/166 CT X
3,226,991	1/1966	Hartsock	200/156 UX
3,274,354	9/1966	Stevens	200/166 CT X

FOREIGN PATENTS OR APPLICATIONS

222,708	8/1962	Austria	200/160
1,362,299	7/1963	France	200/160

Primary Examiner—J. R. Scott
Attorney—Lynn H. Latta

[57] **ABSTRACT**

A small switch suitable for remote control of a light or other low current electrical device, embodies a bridging contact thimble telescoped over and axially slidable on a guide stud disposed between spaced resilient contact blades which are engaged by the thimble upon projection of the thimble by a floating sleeve which has radial latch dogs alternately rotated by push operation into latching engagement with the ends of circumferentially spaced holding ribs in a surrounding housing, for latching the thimble in contact with the blades, and, on the next push operation, into position to be received between the ribs for spring-loaded retraction of the thimble and the floating sleeve by a coil spring enclosed within the thimble under compression between the guide stud and the remote end of the thimble.

10 Claims, 10 Drawing Figures

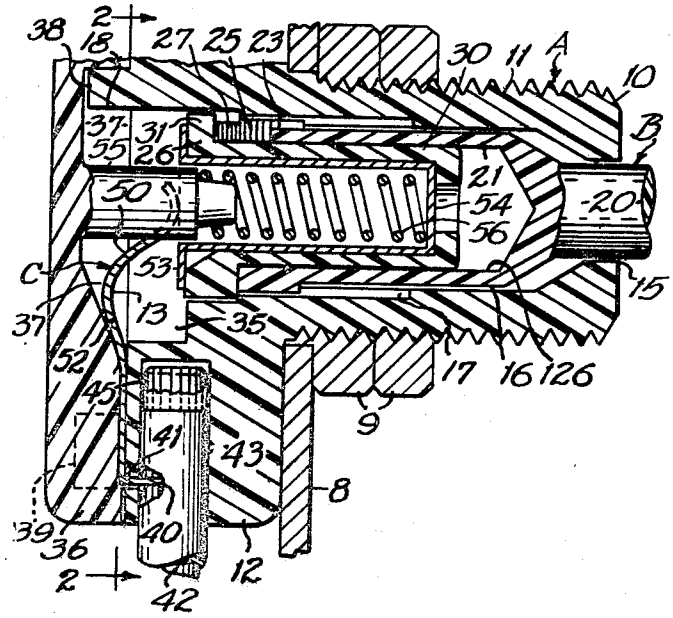

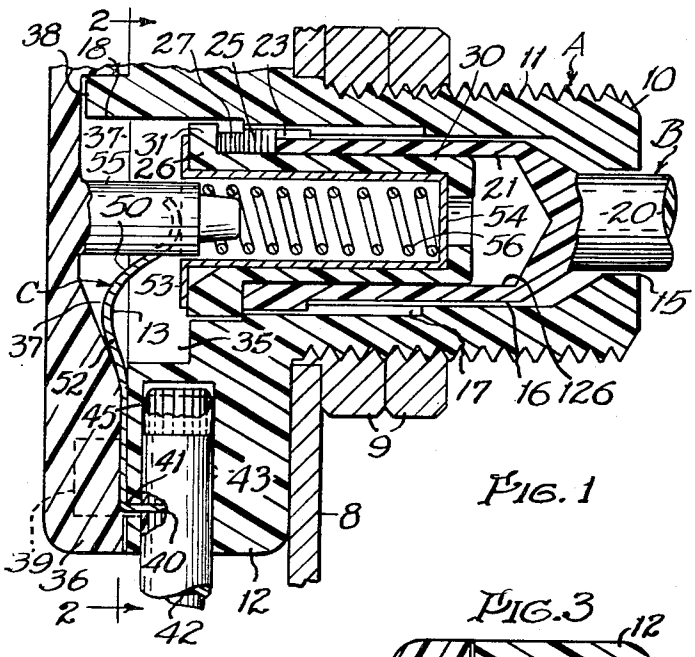

FIG. 1

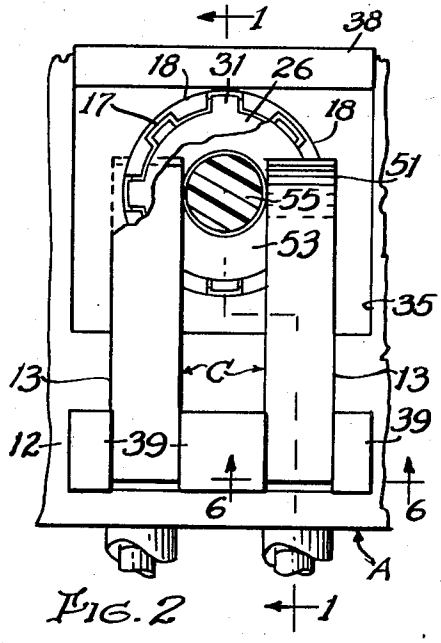

FIG. 2

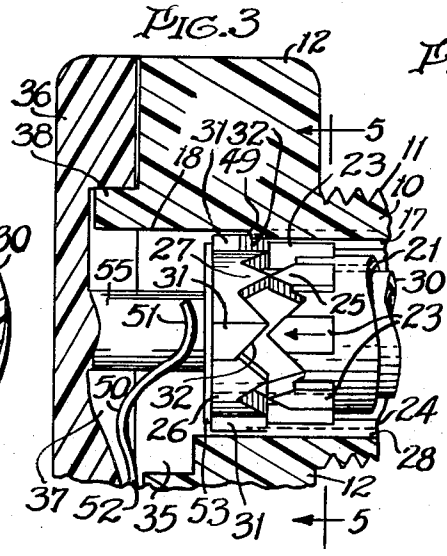

FIG. 3

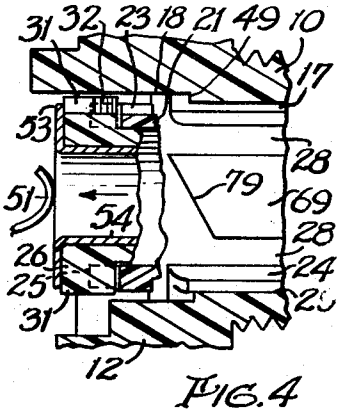

FIG. 4

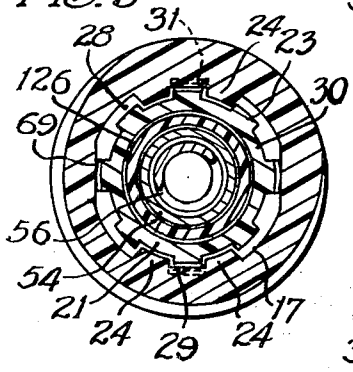

FIG. 5

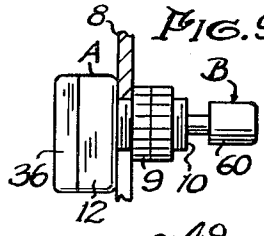

FIG. 9

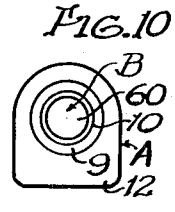

FIG. 10

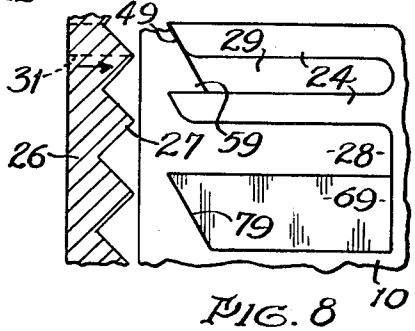

FIG. 8

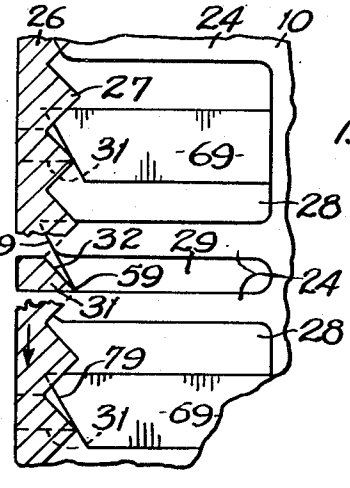

FIG. 7

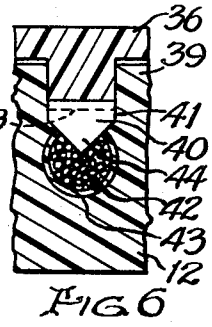

FIG. 6

PUSH-PUSH SWITCH WITH IMPROVED ALTERNATE MAKE AND BREAK LATCHING MECHANISM

Background of the Invention

French Pat. No. 1, 362,299 discloses a push button switch having a rotary latching collar with camming teeth which are actuated by similar teeth on the push button plunger.

Summary of the Invention

The invention is particularly characterized by a compact assembly of coaxial, telescoping parts including a push-button plunger axially slidable but non-rotatable in a tubular casing, an axially and rotatably floating sleeve within the plunger, and a metal thimble within the sleeve, adapted to be projected by a plunger stroke into bridging contact with a pair of contact blades, the sleeve having circumferentially spaced radial latch dogs which are slidable between spaced axial housing ribs during the projection stroke, and are then acted on with a rotary camming action by coacting lugs on the end of the plunger so as to be rotatably indexed into latching engagement with the ends of the housing ribs for latching the thimble in engagement with the contact blades. Upon a subsequent plunger stroke, the dogs are again engaged by the plunger lugs and indexed into registry with axial slots alongside the housing ribs, into which they are received to allow the thimble and sleeve to be retracted by their spring loading.

Description

The general object of the invention is to provide a push-push switch of small dimension which is compact and of inexpensive construction yet thoroughly reliable in operation and very durable, with minimum number of parts, totally enclosed, and with no exterior metal parts to rust or cause electrical shortage.

Other objects will become apparent in the following specifications and appended drawings, in which:

FIG. 1 is an axial sectional view of a switch embodying the invention, taken on line 1—1 of FIG. 2;

FIG. 2 is a cross-sectional view taken on line 2—2 of FIG. 1;

FIG. 3 is an axial sectional view showing the latching mechanism in elevation in an early stage of switch-closing operation;

FIG. 4 is a sectional view taken from the same viewpoint as FIG. 3 but with the parts in a more advanced stage of closing operation and with some parts broken away;

FIG. 5 is a cross-sectional view taken on line 5—5 of FIG. 3;

FIG. 6 is a detail sectional view taken on line 6—6 of FIG. 2;

FIG. 7 is a flattened view of the inner sides of portions of the latching mechanism, shown in the latched position;

FIG. 8 is a flattened view of the same parts, shown approaching the latching position;

FIG. 9 is a side view of the switch unit, and

FIG. 10 is an end view thereof.

Referring now to the drawing in detail, I have shown therein as an example of one form in which the invention may be embodied, a switch suitable for remote control of lights or other electrical devices requiring low current flow through the switch. In general, the switch comprises a housing A, a push-button assembly B slidable axially in a tubular barrel portion of the housing, and electrical contacts C which are cooperable to close and open a control circuit upon successive strokes of plunger assembly B.

Housing A includes a cylindrical barrel portion **10** having external threads **11** for mounting it on a panel, light fixture or bracket **8** by securing means such as a pair of nuts **9**, and an integral head portion **12**, which can be of rectangular block form in a plane normal to the barrel axis, for housing a pair of spring contact blades **13** of the contact assembly C. Barrel **10** (FIG. 1) has an axial succession of bore **15**, counterbore **16**, chamber **17** of internally splined cross section, and an end counterbore **18**, to receive respectively the stem **20** and cylindrical skirt **21** of plunger B, and a plurality of circumferentially spaced lugs **23** on the end of skirt **21**. The lugs are axially slidable alongside two diametrically opposed axially extending pairs of circumferentially spaced, fixed ribs **24** (FIG. 5) in the counterbore **17**, being thus retained against rotation while freely slidable for plunger projection. At the forward end of plunger B (FIGS. 3 and 4) lugs **23** are provided with spear-pointed camming teeth **25**.

Telescoped into the cylindrical bore **126** of skirt **21** is a cylindrical sleeve **30** (Fig. 1) having on a forward end an annular head **26** provided with a plurality of rearwardly projecting camming teeth **27** (FIG. 3) in axially opposed relation to fixed camming teeth **25** of barrel **10**, and cooperable therewith to effect rotary indexing of sleeve **30** when the sleeve has been released for rotation by forward projection. Head **26** further embodies a plurality of latch dogs **31** projecting radially from alternate teeth **27**, each dog **31** having a rear end of sawtooth form defining a camming ramp **32** extending diagonally the full width of the dog.

In retracted positions of sleeve **30**, dogs **31** are received in ways **28** defined along outer sides of the ribs of each pair of fixed ribs **24** (FIG. 5). Ways **28** are deeper (of greater radius from the assembly axis) than axially extending spaces that are defined between the ribs **24** of each pair, such spaces being made more shallow by webs **29** between the splines (FIG. 7). At the forward ends of ribs **24** and webs **29** are diagonal shoulders **49** defining camming ramps which extend from a point of one rib of a pair to the near side of the other rib of the pair so as to define with said near side a latch keeper pocket **59**. The outer diameter of latch dogs **31** is greater than the inner diameter of shoulders **49**. Dogs **31** when urged rearwardly by spring-loaded retraction (hereinafter described) of plunger B, will engage shoulders **49** with a camming action such as to effect rotary indexing of sleeve **30** to move dogs **31** into latching pockets **59** to establish a latched-closed position of the switch. Between the pairs of ribs **24** are flat lands **69** having diagonal forward ends defining camming ramps **79** which may assist the indexing to latched position by engagement with dogs **31** alternate to those in latching position.

Housing head **12** has a rectangular open-front space **35** which is closed by a cover **36**. Cover **36** has a space **37** communicating with space **35** to define a contact chamber in which contact blades **13** are received and operable. Head **12** has an integral transverse lug **38** projecting into cap space **37** and fitted therein for locating the cap cover and head in registration at this one end of the assembly. At the other end of the as-

sembly, housing 12 has a plurality of lugs 39 (laterally spaced so as to flank the contact blades 13) received in mating sockets in cap cover 36, for registering the parts at that end of the assembly. Also at that end of the assembly, contact blades 13 at their fixed ends are provided with terminal tails 40 (FIGS. 1 and 6) which project through apertures 41 in head 12 and are electrically connected to the ends of conductors 42 which are received in bores 43 in head 12. Tails 40 are spear-pointed at 44 (FIG. 6) and are driven through the insulation jackets of conductors 42 to make penetrating, wedging contact with multiple wire cores thereof before attachment of cap cover 36. The ends of the wire cores are solder-dipped at 45 (FIG. 1) to close them so that they will be securely anchored by the penetrating tails 40, and can not pull out of the bores 43. Cover 36 is secured to the housing by the interference fit of lugs 38 and 39 in their sockets. Fusing of the lugs to the cover (e.g., by solvent or heating) is preferably used for permanent attachment. Cover 36 abuts the ends of blades 13 to secure the blades by clamping between the cover and the housing.

Contact assembly C comprises the pair of blades 13, each having a free, flexible end 50 of S-curve configuration terminating in a rounded contact tip 51 (FIG. 3) projecting into head space 35, and a transition portion 52, merging into the main body of the blade, normally spaced slightly from the opposed bottom area of cap space 37 so as to be yieldably retractable under pressure exerted by a coacting radial contact flange 53 on the forward end of a cylindrical metal thimble 54 carried by sleeve 30. The bottom face of cap space 37 has a contour, longitudinally of blades 13, such that the transition portions 52 of the blades will progressively bottom against the cap as they are flexed toward the cap, and are thus supported against excessive bending at points remote from their contact tips 51. Wear life of the blades is thus greatly increased and early failure avoided.

Thimble 54 is loosely telescoped into the sleeve 30. At its forward end it is telescoped over a slidable on a guide stud 55 which is formed as an integral projection on cap 36. A coil spring 56 is received within the thimble 54 and is engaged under compression between its closed end and the shouldered end of stud 55, thus loading the thimble 54 and sleeve 30 for rearward retraction from the latched position. The rear end of plunger stem may be provided with a suitable button 60 (FIG. 9) for finger engagement to operate the switch.

Operation

In a normally open position of the switch (FIGS. 1 and 3) the plunger B and contact thimble 54 are retracted under the loading of spring 56, the contact flange 53 is separated from contact blade tips 51, the latter are projected to rearward limit positions of rest, and the latch dogs 31 are withdrawn into the spaces 28 adjacent ribs 24 and are in axially-opposed registration with plunger lugs 23.

In a first plunger stroke, in which finger pressure is applied to button 60, the lugs 23 will advance into pressure engagement with latch dogs 31, the camming teeth 25, 27 reacting under the pressure to develop a torque thrust against sleeve 30. When the plunger nears the forward end of its stroke, the dogs 31 will clear the forward ends of ribs 24 and the torque thrust will then rotate the sleeve 30 and its head 26 in the direction indicated by the arrow in FIG. 7, until the dogs 31 are registered with the ribs 24, as in FIG. 7. Their rear extremities will then engage the camming shoulders 49 upon relaxation of pressure on the plunger and will be cammed into pockets 59, thus latching the sleeve 30 in the forwardly projected position. In this position the contact flange 53 of thimble 54 will be engaged with blade tips 51, pressing them forwardly so as to flex the blades 13 (FIG. 1) thus developing yielding pressure between the contacts. The switch is thus latched in closed position.

Upon a second plunger stroke, the teeth 25 will again engage the teeth 27 with a camming action which will rotate the sleeve 30 on to a position in which dogs 31 are again registered with the spaces 28 adjacent ribs 24. Upon relaxing the pressure on plunger B, the sleeve 30, thimble 54 and the plunger will be retracted by spring 56, the dogs 31 sliding rearwardly into spaces 28 and the contact flange 53 separating from blade tips 51. The switch is thus opened and will remain open under the spring loading until the button 60 is again pushed.

I claim:

1. In a push-push switch, in combination:
- a housing including a barrel and a transverse head at one end thereof;
- a pair of resilient contact blades having movable free ends with contact tips in spaced relation on opposite sides of the barrel axis;
- a cover secured to said head, said blades being secured between said cover and said head;
- a movable contact in axially opposed relation to said contact tips for bridging engagement therewith to close the switch;
- means mounting said movable contact for axial movement to establish said bridging engagement;
- a plunger axially slidable in said barrel and engageable with said mounting means when projected;
- means yielding biasing said plunger for return to a retracted position;
- latch means on said mounting means;
- cooperating latch keeper means in said housing, engageable with said latch means to retain said mounting means in switch-closing position;
- said plunger having axial movement-transmitting means operable on a first projecting stroke thereof to engage said mounting means and to move it so as to effect engagement of said latch and keeper means for switching closing;
- said movement transmitting means being operable on a second plunger stroke to disengage said latch means from said keeper means so that said mounting means may return to an open-switch position upon retraction of said plunger.

2. A switch as defined in claim 1:
- said movable contact comprising a thimble having a forward end in axially opposed relation to said contact tips for bridging engagement therewith;
- said mounting means comprising a sleeve in which said thimble is mounted;
- said sleeve being rotatable and axially slidable in said barrel;
- said latch means comprising radially protecting latch dogs on said mounting means;

said barrel including internal circumferentially spaced axially extending guide ribs having said keeper means at their forward ends, and adjacent ways alongside said ribs, adapted upon rotational indexing of said mounting means from its latching position, whereby to allow retraction of said thimble to a switch-opening position disengaged from said contact tips;

said biasing means spring-loading said thimble and its mounting means toward said switch-opening position;

said plunger being slidable axially in said barrel and having a forward end provided with radial lugs slidable in said ways, said keeper means and dogs having opposed camming ramps cooperable to impart a rotational torque to said mounting means upon projection of said lugs against said dogs in opposition to said spring loading, said plunger being operable upon one movement thereof to project said mounting means to a position releasing said dogs from said ribs and causing them to rotate to positions for latching engagement with said keeper means at the forward ends of the ribs upon release of said plunger for retraction, and upon a second movement to engage said lugs against said dogs with a further camming action rotating said mounting means on to a position in which said dogs are receivable in said ways, for spring-energized retraction of said thimble to said switch-opening position.

3. A switch as defined in claim 2, wherein said forward end of the thimble embodies a radial flange for bridging contact with said blade tips.

4. A switch as defined in claim 3, wherein said spring-loading means comprises a coil spring in said thimble engaged under compression between said cover and housing.

5. A switch as defined in claim 4, including a guide stud carried by the cover and projecting into the forward end of said thimble, said coil spring being contained in said thimble under compression between the end of said stud and the rear end of said thimble.

6. A switch as defined in claim 5, wherein said stud extends between said contact blade tips.

7. A switch as defined in claim 1, wherein said free ends of the contact blades are of S-curvature including portions projecting into said casing head from within said cap;

said cap having surfaces in opposed relation to said S-curvature portions, said surfaces gradually diverging from said blades at a low angle such that said blades will progressively bottom against said surfaces with increasing deflection of said blades, so as to be supported against sharp bending.

8. A switch as defined in claim 1, wherein said housing includes a head portion integral with said barrel and having an open front, and a cap closing said open front, said stud being integral with said cap, said contact blades having fixed ends which are clamped between said cap and said head, said fixed ends having terminal tails bent at right angles and projecting into slots in said head;

and a pair of conductors having ends extending into bores in said head and engaged by said tails with an anchoring and electrical connection engagement.

9. A switch as defined in claim 8, wherein said tails have spear points for penetration through insulation jackets of said conductors, the latter embodying multiple-strand wire cores into which said spear points penetrate and are wedged between the strands thereof.

10. A switch as defined in claim 9, wherein said wire cores having projecting ends which are solder-dipped to lock them together and thereby lock said conductors to said spear points.

* * * * *