HU000033004T2

(19) **HU**

(11) Lajstromszám: **E 033 004**

(13) **T2**

MAGYARORSZÁG
Szellemi Tulajdon Nemzeti Hivatala

EURÓPAI SZABADALOM
SZÖVEGÉNEK FORDÍTÁSA

(21) Magyar ügyszám: **E 13 829087**
(22) A bejelentés napja: **2013. 12. 04.**

(51) Int. Cl.: ***E05B 19/00*** *(2006.01)*
E05B 27/00 *(2006.01)*

(96) Az európai bejelentés bejelentési száma:
EP 20130829087
(97) Az európai bejelentés közzétételi adatai:
EP 2882912 A2 **2014. 07. 10.**
(97) Az európai szabadalom megadásának meghirdetési adatai:
EP 2882912 B1 **2016. 10. 26.**

(86) A nemzetközi (PCT) bejelentési szám:
PCT/US 13/072945
(87) A nemzetközi közzétételi szám:
WO 14107254

(30) Elsőbbségi adatok:
22411113 **2013. 01. 03.** **IL**

(72) Feltaláló(k):
BEN-AHARON, Effi, 4537305 Hod HaSharon (IL)
KAISER, Izhak, 4973770 Petach Tikva (IL)
FRENKEL, Zvi, 4906439 Petach Tikva (IL)

(73) Jogosult(ak):
Mul-T-Lock Technologies Ltd., 81104 Yavne (IL)

(74) Képviselő:
PINTZ ÉS TÁRSAI Szabadalmi, Védjegy és Jogi Iroda Kft., Budapest

(54) **Teleszkópos tüskékhez szolgáló maximális szomszédos vágási előírás (macs) korlátozások eltávolítása**

Az európai szabadalom ellen, megadásának az Európai Szabadalmi Közlönyben való meghirdetésétől számított kilenc hónapon belül, felszólalást lehet benyújtani az Európai Szabadalmi Hivatalnál. (Európai Szabadalmi Egyezmény 99. cikk(1))

A fordítást a szabadalmas az 1995. évi XXXIII. törvény 84/H. §-a szerint nyújtotta be. A fordítás tartalmi helyességét a Szellemi Tulajdon Nemzeti Hivatala nem vizsgálta.

(19) Europäisches Patentamt
European Patent Office
Office européen des brevets

(11) EP 2 882 912 B1

(12) **EUROPEAN PATENT SPECIFICATION**

(45) Date of publication and mention of the grant of the patent:
26.10.2016 Bulletin 2016/43

(21) Application number: **13829087.9**

(22) Date of filing: **04.12.2013**

(51) Int Cl.:
E05B 19/00 *(2006.01)* ***E05B 27/00*** *(2006.01)*

(86) International application number:
PCT/US2013/072945

(87) International publication number:
WO 2014/107254 (10.07.2014 Gazette 2014/28)

(54) **ELIMINATING MAXIMUM ADJACENT CUT SPECIFICATION RESTRICTIONS FOR TELESCOPING PINS**

ELIMINATION DER BESCHRÄNKUNGEN DER BEDINGUNGEN FÜR DIE MAXIMALE ANGRENZENDE BOHRUNG FÜR TELESKOPISCHE STIFTE

SUPPRESSION DES RESTRICTIONS DE SPÉCIFICATION DE DÉCOUPE ADJACENTE MAXIMALE POUR DES BROCHES TÉLESCOPIQUES

(84) Designated Contracting States:
AL AT BE BG CH CY CZ DE DK EE ES FI FR GB GR HR HU IE IS IT LI LT LU LV MC MK MT NL NO PL PT RO RS SE SI SK SM TR

(30) Priority: **03.01.2013 IL 22411113**

(43) Date of publication of application:
17.06.2015 Bulletin 2015/25

(73) Proprietor: **Mul-T-Lock Technologies Ltd.**
81104 Yavne (IL)

(72) Inventors:
- **BEN-AHARON, Effi**
  4537305 Hod HaSharon (IL)
- **KAISER, Izhak**
  4973770 Petach Tikva (IL)
- **FRENKEL, Zvi**
  4906439 Petach Tikva (IL)

(74) Representative: **White, Duncan Rohan**
Marks & Clerk LLP
Fletcher House (2nd Floor)
Heatley Road
The Oxford Science Park
Oxford OX4 4GE (GB)

(56) References cited:
WO-A1-2004/001165 **WO-A1-2004/048724**
WO-A1-2009/019726 **WO-A1-2010/026381**

Note: Within nine months of the publication of the mention of the grant of the European patent in the European Patent Bulletin, any person may give notice to the European Patent Office of opposition to that patent, in accordance with the Implementing Regulations. Notice of opposition shall not be deemed to have been filed until the opposition fee has been paid. (Art. 99(1) European Patent Convention).

EP 2 882 912 B1

Description

FIELD OF THE INVENTION

[0001] The present invention relates to locking apparatus generally and more particularly to eliminating the maximum adjacent cut specification of key cuts for telescoping pins.

BACKGROUND OF THE INVENTION

[0002] As is well known in the art, cylinder locks generally include a plug arranged for rotation in a lock cylinder housing. Plug pins are slidingly disposed in the plug and are arranged to move against driver pins, which are disposed in bores formed in the cylinder housing and are spring biased toward the axis of the plug rotation. Insertion of a properly cut key in a keyway provided in the plug moves the plug pins against the driver pins and aligns all the pins along a shear line defined by the plug outer circumference, thereby permitting rotation of the plug to cause operation of a latch or locking mechanism.

[0003] The combination of key cuts that correctly move all the plug pins to the shear line is commonly referred to as bitting. Lock/key manufacturers typically define the bitting in order to have a large number of possible combinations while still maintaining a secure, functional and durable key. The key cuts have a range of depth, ranging from the shallowest possible cut to the deepest possible cut. Another parameter is the spacing between key cuts, i.e., the distance from the center of one cut to the center of an adjacent cut. Each key cut is designed to move one plug pin at discrete plug pin locations, also referred to as plug pin stations. Each plug pin moves in a discrete bore formed in the plug.

[0004] Some keys are made for interacting with telescoping pins. In such a case, each telescoping plug pin has two or more pins that move independently of each other. For telescoping plug pins, the key cuts formed in the key overlap each other to some extent. Each key cut moves a different one of the pins that make up the telescoping pin to the shear line.

[0005] Key cuts are typically made by a key cutting or duplicating machine that machines cuts into a key blank. The machining operation is typically done by a cutting tool with sloped sides that cuts into the key blank. The key cut thus has sloping sides. This is also true for tools that stamp the cuts into the key blank.

[0006] Lock/key manufacturers typically define a maximum adjacent cut specification (MACS). That is, it is normally not possible to have a large difference in key cut depth between neighboring cut positions. See, for example, US Patent Applications 20090277239 and 20090301144 assigned to Ingersoll-Rand Company, which clearly state that a key cut that violates the MACS is not an available key cut.

[0007] The general idea of MACS is explained with reference to Fig. 1; the telescoping case will be explained afterwards with reference to Fig. 1A. A key 1 is shown with two adjacent key cuts 2 and 3 for moving plug pins 4 and 5 of different lengths to a shear line 6. Let us examine what happens if a deeper cut 7 (as shown by the broken line) were to be made instead of key cut 3. Because the key cutting tool has sloping sides, the tool width extends laterally beyond the center position of the deeper cut and removes key material from the adjacent shallower cut. As a result, the plug pin 4, which was meant for the shallower cut, will not sit at the correct depth; rather it will sit deeper than it should (as shown by the broken line 8) because of the material that has been cut away by cutting the adjacent key cut. The plug pin 4 will not be positioned at the shear line 6 but rather at a line 9 (broken line in the drawing) and the plug will not turn.

[0008] Another reason for the MACS limitation is to ensure easy insertion or removal of the key. When the key is inserted into the cylinder lock, the plug pins ride up and down the ramps between cuts. If the angle is too steep, the pins can have trouble riding the ramps and the key can get jammed.

[0009] Without limitations to the present invention, the MACS may be generally calculated for the above as follows:

$$\text{MACS} = \frac{SP - CR}{DI(\tan\frac{CA}{2})}$$

wherein SP = pin spacing (spacing between plug pins to be operated by the key)
CR = cut root (length of the bottom ("root") of the key cut)
DI = depth increment
CA = cut angle (angle of the cutting tool head used to create the key cuts)

[0010] Reference is now made to Fig. 1A, which illustrates the MACS for telescoping pins (e.g., inner and outer pins) of a telescoping plug pin of a cylinder lock plug (referred to as the telescoping MACS). Each of the inner and outer pins has a chamfer, that is, a conical tip. This means the shaft of each pin has an outer diameter which is larger than the diameter of the shaft tip.

[0011] Although the invention is not limited to this definition, the MACS for a telescoping pin may be calculated as follows:

$$\text{MACS} = \frac{ID - CR}{2DI(\tan\frac{CA}{2})}$$

wherein ID = the outside diameter of the inner telescoping pin

[0012] The telescoping MACS sets a limit for possible depths of adjacent cuts, and thereby reduces the number

of possible key cut combinations.

[0013] Efforts have been made in the prior art to increase the MACS for non-telescoping pins. For example, in US Patent Application 20120240646 (corresponding to PCT Application PCT/SE2010/051405), assigned to ASSA OEM AB, Sweden, conical angles of grooves which serve as the key cuts have been changed. In other words, the above formula for MACS still applies; this document simply changes the cut angle CA. All the key cuts are still defined and restricted by the same MACS definition.

[0014] WO2010026381 discloses a cylinder assembly with a telescopic tumbler pin assembly that engages a dome or is received by a cavity in a key blade.

[0015] WO2004/01165 A1 shows in fig. 1b an example for a cylinder lock comprising telescopic body pin assemblies 22 interacting with a key 17.

SUMMARY OF THE INVENTION

[0016] The present invention seeks to provide methods and structure for eliminating the maximum adjacent cut specification of key cuts for telescoping pins, as is described more in detail hereinbelow. The prior art has labored under an assumption of how the key cuts are made in determining the MACS, using a symmetric conical angle cutting tool. The present invention succeeds in making one or more of the telescoping key cuts in a manner contrary to the underlying assumption of the prior art MACS for telescoping pins, thereby eliminating the restrictions of the MACS. This may enable making key cuts that are deeper than the prior art definition of telescoping MACS, for example. The non-MACS key cut for a given telescoping pin is defined as a key cut that is not restricted by the telescoping MACS definition for that given telescoping pin.

[0017] The invention provides a key device as defined by claim 1 and a lock and key combination as defined by claim 12. Further aspects and preferred features are set out in the dependent claims.

BRIEF DESCRIPTION OF THE DRAWINGS

[0018] The present invention will be understood and appreciated more fully from the following detailed description, taken in conjunction with the drawings in which:

Fig. 1 is a simplified illustration of a prior art key showing the MACS limitation for adjacent key cuts;

Fig. 1A is a simplified illustration of a prior art key showing the MACS limitation for inner and outer pins of a telescoping pin;

Figs. 2A, 2B, 2C and 3A, 3B and 3C are simplified pictorial and top view illustrations, respectively, of key devices with non-central support structure for one or more pins (in this case, outer pins) of telescoping plug pins, constructed and operative in accordance with an embodiment of the present invention, wherein Fig. 2A is a key with a non-MACS key cut and other key cuts formed thereon, Fig. 2B is a key blank with a non-MACS key cut formed thereon whose ends are tapered inwards, and Fig. 2C is a key blank with a non-MACS key cut formed thereon which is wider than that of Fig. 2B up to its ends and whose ends terminate with a central protrusion;

Fig. 3D is a simplified top-view illustration of a key blank with a non-MACS key cut which is tilted with respect to the longitudinal axis of the elongate shaft portion of the key blank;

Fig. 4 is a simplified sectional illustration of any of the key devices of Figs. 2A-3C, showing a telescoping plug pin supported at a support surface for the outer pin of the telescoping plug pin, the section taken along lines IV-IV in Fig. 3A;

Fig. 5 is a simplified sectional illustration of the key device of Figs. 2A-3C, the section taken along lines IV-IV in Fig. 3A, showing a telescoping plug pin, having a longer inner pin than that of Fig. 4, and with key cuts made on the central support structure for both the inner and outer pins of the telescoping plug pin;

Fig. 6 is a simplified sectional illustration of the key device of Figs. 2A-3C, the section taken along lines VI-VI in Fig. 3A, showing a telescoping plug pin, having a longer inner pin than that of Fig. 4 like that of Fig. 5, but this time with a key cut made on the non-central support structure for the outer pin and a key cut made on the central support structure for the inner pin, the key cut for the inner pin being deeper than that of Fig. 4 but the key cut for the outer pin being the same depth as the key cut for the outer pin in Fig. 4;

Figs. 7A and 7B are simplified pictorial illustrations of two telescoping pins which may be moved by the key devices of the present invention; and

Figs. 8A and 8B are simplified sectional illustrations of the key device of Figs. 2A-3C and of the key device of Fig. 3D, respectively, inserted in cylinder locks, in accordance with embodiments of the present invention, with the plug pins moved to the shear line.

DETAILED DESCRIPTION OF EMBODIMENTS

[0019] Reference is now made to Figs. 2A-3C, which illustrate a key device 10, constructed and operative in accordance with a non-limiting embodiment of the present invention.

[0020] It is noted that throughout the specification and claims the term "key device" refers to a key blank or a key made from a key blank with key cuts formed thereon. Key device 10 is illustrated as a key blank in Figs. 2B, 2C, 3B and 3C.

[0021] Key device 10 includes a generally elongate shaft portion (key blade) 12 having a surface with key cuts 14 (Figs. 2A and 3A) formed thereon that define a key combination surface 16, as is known in the art. The

key cuts 14 are cut for interfacing with telescoping plug pins, this term encompassing any type of pin that includes at least one inner pin and at least one outer pin that move with respect to each other.

[0022] Key device 10 may define a reversible key, with symmetric key combination surfaces. (Figs. 4-6 show reversible keys.) Alternatively, key device 10 may have a single key combination surface or different key combination surfaces.

[0023] Key combination surface 16 has a plurality of key cut stations 18 (Figs. 3A and 3B) for forming telescoping key cuts 14 at each key cut station 18. The key cut stations 18 may be axially spaced from each other, but alternatively may be spaced in other directions. Each key cut station 18 has a telescoping maximum adjacent cut specification (MACS) (seen in Fig. 4), which defines a maximum depth of adjacent key cuts for interfacing with telescoping pins of a telescoping plug pin of a cylinder lock plug, as explained above with reference to Fig. 1A.

[0024] In accordance with an embodiment of the present invention, a non-MACS key cut 20 (also referred to as a special key cut) is formed at one or more key cut stations 18 (Figs. 2A-3C and 6). Key cut 20 is called a "non-MACS key cut 20" because it is not restricted by the telescoping MACS definition for a given telescoping pin 22; it is formed in a manner that is contrary to the telescoping MACS definition used for making the other, conventional key cuts. As seen in Fig. 6, non-MACS key cut 20 is arranged to interface with telescoping pin 22 that has two pins, one nested in the other. More specifically, non-MACS key cut 20 interfaces with a first pin 24 (in the illustrated embodiment, this is the inner pin 24) of this given telescoping pin 22. The elongate shaft portion 12 has another key cut 20A formed at the key cut station of non-MACS key cut 20 for interfacing with a second pin 26 (in the illustrated embodiment, this is the outer pin 26) of this given telescoping pin 22 (that is, key cut 20A and non-MACS key cut 20 interact with the different telescoping pins that make up the same given telescoping plug pin). In the illustrated embodiment, the non-MACS key cut 20 has a depth deeper than the depth defined by the MACS, easily seen by comparing Figs. 4 and 6. Alternatively, non-MACS key cut 20 does not have to be deeper than the MACS. Non-MACS key cut 20 is dimensioned (configured) to leave material in elongate shaft portion 12 for forming key cut 20A. Non-MACS key cut is dimensioned for supporting the first pin 24 at a shear line 30 (Figs. 6 and 8).

[0025] In an alternate embodiment of the invention, non-MACS key cut 20 may be fashioned to interface with the outer pin of the telescoping pin.

[0026] In a non-limiting embodiment of the invention, as seen in Figs. 2A-3C, key combination surface 16 includes a support surface 32 on which the telescoping key cuts 14 are at least partially formable. Non-MACS key cut 20 is formed in support surface 32, too. Without limitation, support surface 32 can be raised, lower or flush with surface 16. In the illustration, axial grooves 34 are formed in key combination surface 16 near support surface 32, but the invention does not require such grooves. The illustrated non-MACS key cut 20 includes a longitudinal concave furrow formed in elongate shaft portion 16. This formation allows for easy insertion or removal of the key in the cylinder lock, so that the plug pins ride up and down easily on the ramps between key cuts.

[0027] In the above embodiments, the non-MACS key cut is aligned with, or parallel to, the longitudinal axis of the elongate shaft portion of the key or key blank. Fig. 3D illustrates an alternative, in which a non-MACS key cut 20D is tilted with respect to the longitudinal axis of the elongate shaft portion of the key blank.

[0028] One of the important significances of the invention can be appreciated by comparing Figs. 4-6, as is now explained.

[0029] Fig. 4 shows an inner pin 36 of a telescoping plug pin supported by an inner key cut 36C and an outer pin 38 supported by an outer key cut 38C formed over inner cut 36C. Note that outer pin 38 is supported by a shoulder 39 of outer key cut 38C. Both key cuts 36C and 38C are formed over support surface 32.

[0030] Fig. 5 shows a telescoping plug pin having a longer inner pin 40 than inner pin 36 of Fig. 4. Instead of making a non-MACS key cut, a conventionally formed key cut 41 has been made in an attempt to support the extra-long inner pin 40. This results in destroying the shoulder of the outer key cut which was seen in Fig. 4, so that the inner and outer key cuts blend into one key cut 41. The result is the outer pin 38 will not be positioned anymore at the shear line.

[0031] In Fig. 6, inner pin 24 has the same length as extra-long inner pin 40 of Fig. 5. However, non-MACS key cut 20 is made on the support surface for inner pin 24, whereas the outer pin 26 is supported on the non-central support surface (that is, the material left on the sides - lateral sides, not the longitudinal sides - of support surface 32 in Figs. 2A-3C). All pins of the telescoping pin are positioned correctly at the shear line and the MACS depth has been increased. This increases the possible key combinations.

[0032] Figs. 7A and 7B illustrate two non-limiting examples of telescoping pins which may be moved by the key devices of the present invention. In Fig. 7A, inner 71 and outer 72 telescoping pins are generally round. The outer pin 72 has a conical portion 73 and a rim 74. In Fig. 7B, an inner pin 75 has a non-round (e.g., chisel) end 76 and is constrained to move in a slot 77 formed in an outer pin 78; inner pin 75 cannot rotate with respect to outer pin 72. Outer pin 78 has one or more lugs 79 that prevent outer pin 78 from rotating.

[0033] Fig. 8A illustrates the key device of any of the embodiments of the invention (such as key device 10) inserted in a cylinder lock 80, in accordance with an embodiment of the present invention. It is seen that non-MACS key cut 20 moves telescoping plug pins (inner pin 24 and outer pin 26) of a plug 81 to the shear line 30, with a driver pin 82 also moved to shear line 30.

[0034] Fig. 8B illustrates the key device of any of the embodiments of the invention (such as key device 10) inserted in a cylinder lock 90, in accordance with another embodiment of the present invention. Cylinder lock 90 employs the telescoping pin of Fig. 7B and the non-MACS key cut 20D of Fig. 3D. It is seen that non-MACS key cut 20D moves inner 75 and outer 78 telescoping pins of a plug 91 to the shear line 30, with a driver pin 92 also moved to shear line 30.

Claims

1. A key device (10) for use with a cylinder lock (80) that comprises a cylinder lock plug (81) having telescoping plug pins, each telescoping plug pin comprising inner and outer pins (24, 26) which are movable to a shear line (30) against corresponding driver pins (82) located in said cylinder lock (80), the key device (10) comprising:

   a generally elongate shaft portion (12) comprising a key combination surface (16) that has a plurality of key cut stations (18) for forming telescoping key cuts (14) at each key cut station (18), said key cut stations (18) having a telescoping maximum adjacent cut specification (MACS) that defines a maximum depth of adjacent key cuts for interfacing with telescoping pins of a telescoping plug pin of a cylinder lock plug, wherein the telescoping MACS is defined as:

$$\text{MACS} = \frac{ID - CR}{2DI(\tan\frac{CA}{2})}$$

   wherein ID = outside diameter of the inner telescoping pin (24)
   CR = cut root (length of bottom ("root")) of the key cut (14)
   DI = depth increment
   CA = cut angle (angle of cutting tool head used to create key cut (14); and

   characterised by a non-MACS telescoping key cut (20) defined as a key cut that is not restricted by said telescoping MACS definition, formed at at least one of said key cut stations (18) for interfacing with a first pin (24) of a given telescoping plug pin, dimensioned to leave material in said elongate shaft portion (12) for forming another key cut (20A) for interfacing with a second pin (26) of said given telescoping plug pin.

2. The key device (10) according to claim 1, wherein said non-MACS telescoping key cut (20) comprises at least one furrow formed in said elongate shaft portion (12), said furrow being arranged to interact with said first pin (24) of said given telescopic plug pin.

3. The key device (10) according to claim 1, wherein said non-MACS telescoping key cut (20) or said special telescoping key cut (20) has a depth deeper than a depth defined by said MACS.

4. The key device (10) according to claim 1, wherein said non-MACS telescoping key cut (20) or said special telescoping key cut (20) is formed for interfacing with an inner pin of said given telescoping plug pin.

5. The key device (10) according to claim 1, wherein said key combination surface (16) comprises a support surface (32) on which said telescoping key cuts (14) are at least partially formable, and said non-MACS telescoping key cut (20) or said special telescoping key cut (20) is formed in said support surface (32).

6. The key device (10) according to claim 5, wherein said non-MACS telescoping key cut (20) is dimensioned to leave material away from said support surface (32) for forming said other key cut for interfacing with the outer pin.

7. The key device (10) according to claim 2, wherein said furrow is concave.

8. The key device (10) according to claim 7, wherein said non-MACS telescoping key cut (20) is aligned with or parallel to a longitudinal axis of said elongate shaft portion (12).

9. The key device (10) according to claim 7, wherein said non-MACS telescoping key cut (20) is tilted with respect to a longitudinal axis of said elongate shaft portion (12).

10. The key device (10) according to any one of the preceding claims, wherein said elongate shaft portion (12) has telescoping key cuts formed thereon at the key cut stations (18) away from said non-MACS telescoping key cut (20).

11. The key device (10) according to any one of the preceding claims, wherein said elongate shaft portion (12) has another key cut (20A) formed at the key cut station (18) of said non-MACS telescoping key cut (20) for interfacing with the second pin (26) of said given telescoping plug pin.

12. A lock and key combination comprising:

   a cylinder lock (80) comprising:

   a rotatable plug (81) having a keyway, said

plug (81) comprising telescoping plug pins, each telescoping plug pin comprising inner and outer pins (24, 26) which are movable to a shear line (30) against corresponding driver pins (82) located in said cylinder lock (80); and
a key device (10) according to claim 1.

Patentansprüche

1. Schlüsselvorrichtung (10) zur Verwendung mit einem Zylinderschloss (80), umfassend einen Zylinderschlossstecker (81) mit teleskopischen Steckerstiften, wobei jeder teleskopische Steckerstift innere und äußere Stifte (24, 26) umfasst, die auf einer Scherlinie (30) gegen entsprechende Mitnehmerstifte (82), die in dem Zylinderschloss (80) positioniert sind, beweglich sind, die Schlüsselvorrichtung (10) umfassend:

einen im Allgemeinen länglichen Schaftteil (12), umfassend eine Schlüsselkombinationsfläche (16) mit einer Vielzahl von Schlüsselprofilstationen (18) zum Bilden von teleskopischen Schlüsselprofilen (14) an jeder Schlüsselprofilstation (18), wobei die Schlüsselprofilstationen (18) über eine teleskopische maximale nebeneinander liegende Profilspezifikation (Maximum Adjacent Cut Specification - MACS) verfügen, die eine maximale Tiefe von nebeneinander liegenden Schlüsselprofilen zum Verbinden mit teleskopischen Stiften eines teleskopischen Steckerstifts von einem Zylinderschlossstecker definiert, wobei die teleskopische MACS wie folgt definiert ist:

$$\text{MACS} = \frac{ID - CR}{2DI(tan\frac{CA}{2})}$$

wobei ID = Außendurchmesser des inneren teleskopischen Stifts (24)
CR = Profilwurzel (Länge des Bodens ("Wurzel")) des Schlüsselprofils (14)
DI = Zunahme der Tiefe
CA = Schneidwinkel (Winkel des verwendeten Schneidwerkzeugs zum Erstellen des Schlüsselprofils (14); und

gekennzeichnet durch ein teleskopisches Nicht-MACS-Schlüsselprofil (20), definiert als ein Schlüsselprofil, das nicht **durch** die teleskopische MACS-Definition beschränkt wird, gebildet an zumindest einer der Schlüsselprofilstationen (18) zum Verbinden mit einem ersten Stift (24) eines gegebenen teleskopischen Steckerstifts, wobei dies so dimensioniert ist, dass Material in dem länglichen Schaftteil (12) zum Bilden eines weiteren Schlüsselprofils (20A) zum Verbinden mit einem zweiten Stift (26) des gegebenen teleskopischen Steckerstifts belassen wird.

2. Schlüsselvorrichtung (10) nach Anspruch 1, wobei das teleskopische Nicht-MACS-Schlüsselprofil (20) zumindest eine Rille umfasst, gebildet in dem länglichen Schaftteil (12), wobei die Rille so angeordnet ist, dass sie mit dem ersten Stift (24) des gegebenen teleskopischen Steckerstifts interagiert.

3. Schlüsselvorrichtung (10) nach Anspruch 1, wobei das teleskopische Nicht-MACS-Schlüsselprofil (20) oder das spezielle teleskopische Schlüsselprofil (20) über eine Tiefe verfügt, die tiefer als die durch die MACS definierte Tiefe ist.

4. Schlüsselvorrichtung (10) nach Anspruch 1, wobei das teleskopische Nicht-M MACS-Schlüsselprofil (20) oder das spezielle teleskopische Schlüsselprofil (20) zum Verbinden mit einem inneren Stift des gegebenen teleskopischen Steckerstifts geformt ist

5. Schlüsselvorrichtung (10) nach Anspruch 1, wobei die Schlüsselkombinationsfläche (16) eine Stützfläche (32) umfasst, auf der die teleskopischen Schlüsselprofile (14) zumindest teilweise formbar sind, und das teleskopische Nicht-MACS-Schlüsselprofil (20) oder das spezielle teleskopische Schlüsselprofil (20) in der Stützfläche (32) geformt wird.

6. Schlüsselvorrichtung (10) nach Anspruch 5, wobei das teleskopische Nicht-MACS-Schlüsselprofil (20) so dimensioniert ist, dass Material von der Stützfläche (32) zum Bilden des anderen Schlüsselprofils zum Verbinden mit dem äußeren Stift weggelassen wird.

7. Schlüsselvorrichtung (10) nach Anspruch 2, wobei die Rille konkav ist.

8. Schlüsselvorrichtung (10) nach Anspruch 7, wobei das teleskopische Nicht-MACS-Schlüsselprofil (20) mit einer Längsachse des länglichen Schaftteils (12) ausgerichtet oder zu dieser parallel ist.

9. Schlüsselvorrichtung (10) nach Anspruch 7, wobei das teleskopische Nicht-MACS-Schlüsselprofil (20) in Bezug auf eine Längsachse des länglichen Schaftteils (12) gekippt ist.

10. Schlüsselvorrichtung (10) nach einem der vorangehenden Ansprüche, wobei der längliche Schaftteil (12) an den Schlüsselprofilstationen (18) über daran geformte teleskopische Schlüsselprofile (18) weg

von dem teleskopischen Nicht-MACS-Schlüsselprofil (20) verfügt.

11. Schlüsselvorrichtung (10) nach einem der vorangehenden Ansprüche, wobei der längliche Schaftteil (12) über ein weiteres Schlüsselprofil (20A) verfügt, das an der Schlüsselprofilstation (18) des teleskopischen Nicht-MACS-Schlüsselprofils (20) zum Verbinden mit dem zweiten Stift (26) des gegebenen teleskopischen Steckerstifts geformt ist.

12. Kombination von Schloss und Schlüssel, umfassend:

ein Zylinderschloss (80), umfassend:

einen drehbaren Stecker (81) mit einem Schlüsselkanal, wobei der Stecker (81) teleskopische Steckerstifte umfasst, wobei jeder teleskopische Steckerstift innere und äußere Stifte (24, 26) umfasst, die auf einer Scherlinie (30) gegen entsprechende Mitnehmerstifte (82), die in dem Zylinderschloss (80) positioniert sind, beweglich sind; und
eine Schlüsselvorrichtung (10) nach Anspruch 1.

Revendications

1. Dispositif formant clé (10) à utiliser avec une serrure à cylindre (80) qui comprend un barillet de serrure à cylindre (81) présentant des goupilles de barillet télescopiques, chaque goupille de barillet télescopique comprenant des goupilles intérieure et extérieure (24, 26) qui sont mobiles par rapport à une ligne de césure (30) à l'encontre de goupilles de guidage (82) correspondantes situées dans ladite serrure à cylindre (80), le dispositif formant clé (10) comprenant :

une partie tige (12) essentiellement allongée comprenant une surface de combinaison de clé (16) qui présente une pluralité de postes pour découpe de clé (18) permettant de former des découpes de clé (14) télescopique au niveau de chaque poste de découpe de clé (18), lesdits postes pour découpe de clé (18) présentant une spécification de découpe adjacente maximum (MACS) télescopique qui définit une profondeur maximum pour des découpes de clé adjacentes en vue d'une interaction avec des goupilles télescopiques d'une goupille de barillet télescopique d'un barillet de serrure à cylindre, dans lequel la MACS télescopique est défini par la formule :

$$\mathrm{MACS} = \frac{ID - CR}{2DI(tan\frac{CA}{2})}$$

dans laquelle ID = diamètre extérieur de la goupille télescopique intérieure (24)
CR = racine de découpe (longueur du fond (« racine ») de la découpe de clé (14)
DI = incrément de profondeur
CA = angle de découpe (angle de l'outil de coupe utilisé pour créer la découpe de clé (14) ; et

caractérisé par une découpe de clé (20) télescopique non MACS définie comme étant une découpe de clé qui n'est pas limitée par ladite définition de MACS télescopique, formée au niveau d'au moins un desdits postes pour découpe de clé (18) en vue d'une interaction avec une première goupille (24) d'une goupille de barillet télescopique donnée, dimensionnée afin de laisser de la matière dans ladite partie tige allongée (12) afin de former une autre découpe de clé (20A) en vue d'une interaction avec une deuxième goupille (26) de ladite goupille de barillet télescopique donnée.

2. Dispositif formant clé (10) selon la revendication 1, dans lequel ladite découpe de clé (20) télescopique non MACS comprend au moins un sillon formé dans ladite partie tige allongée (12), ledit sillon étant agencé de manière à interagir avec ladite première goupille (24) de ladite goupille de barillet télescopique donnée.

3. Dispositif formant clé (10) selon la revendication 1, dans lequel ladite découpe de clé (20) télescopique non MACS ou ladite découpe de clé (20) télescopique spéciale présente une profondeur supérieure à une profondeur définie par ladite MACS.

4. Dispositif formant clé (10) selon la revendication 1, dans lequel ladite découpe de clé (20) télescopique non MACS ou ladite découpe de clé (20) télescopique spéciale est formée en vue d'une interaction avec une goupille intérieure de ladite goupille de barillet télescopique donnée.

5. Dispositif formant clé (10) selon la revendication 1, dans lequel ladite surface de combinaison de clé (16) comprend une surface de support (32) sur laquelle lesdites découpes de clé (14) télescopiques peuvent être formées au moins partiellement, et ladite découpe de clé (20) télescopique non MACS ou ladite découpe de clé (20) télescopique spéciale est formée dans ladite surface de support (32).

6. Dispositif formant clé (10) selon la revendication 5, dans lequel ladite découpe de clé (20) télescopique non MACS est dimensionnée afin de laisser de la matière à distance de ladite surface de support (32) afin de former ladite autre découpe de clé en vue d'une interaction avec la goupille extérieure.

7. Dispositif formant clé (10) selon la revendication 2, dans lequel ledit sillon est concave.

8. Dispositif formant clé (10) selon la revendication 7, dans lequel ladite découpe de clé (20) télescopique non MACS est alignée avec ou est parallèle à un axe longitudinal de ladite partie tige allongée (12).

9. Dispositif formant clé (10) selon la revendication 7, dans lequel ladite découpe de clé (20) télescopique non MACS est basculée par rapport à un axe longitudinal de ladite partie tige allongée (12).

10. Dispositif formant clé (10) selon l'une quelconque des revendications précédentes, dans lequel ladite partie tige allongée (12) présente des découpes de clé télescopiques formées sur celle-ci au niveau des postes pour découpe de clé (18) à distance de ladite découpe de clé (20) télescopique non MACS.

11. Dispositif formant clé (10) selon l'une quelconque des revendications précédentes, dans lequel ladite partie tige allongée (12) présente une autre découpe de clé (20A) formée au niveau du poste pour découpe de clé (18) de ladite découpe de clé (20) télescopique non MACS en vue d'une interaction avec la deuxième goupille (26) de ladite goupille de barillet télescopique donnée.

12. Combinaison de serrure et clé, comprenant :

une serrure à cylindre (80) comprenant :

un barillet rotatif (81) présentant une entrée de clé, ledit barillet (81) comprenant des goupilles de barillet télescopiques, chaque goupille de barillet télescopique comprenant des goupilles intérieure et extérieure (24, 26) qui sont mobiles par rapport à une ligne de césure (30) à l'encontre de goupilles de guidage (82) correspondantes situées dans ladite serrure à cylindre (80) ; et un dispositif formant clé (10) selon la revendication 1.

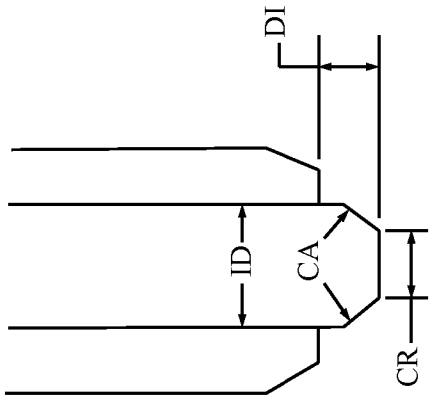

FIG. 1A
PRIOR ART

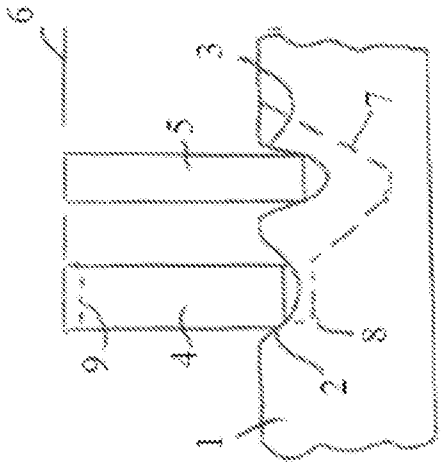

FIG. 1
PRIOR ART

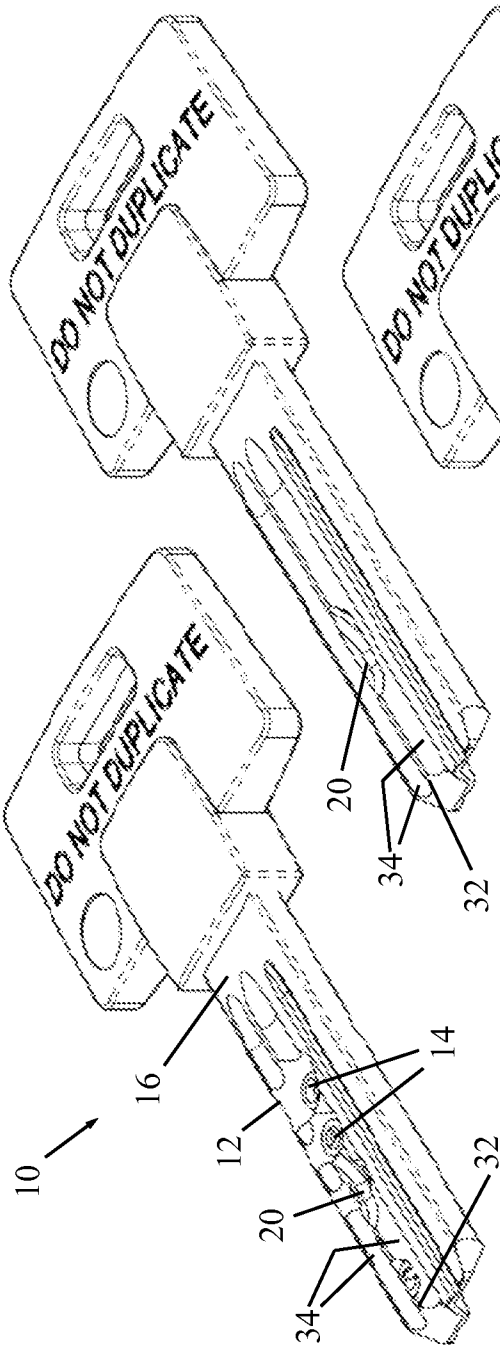

FIG. 2A

FIG. 2B

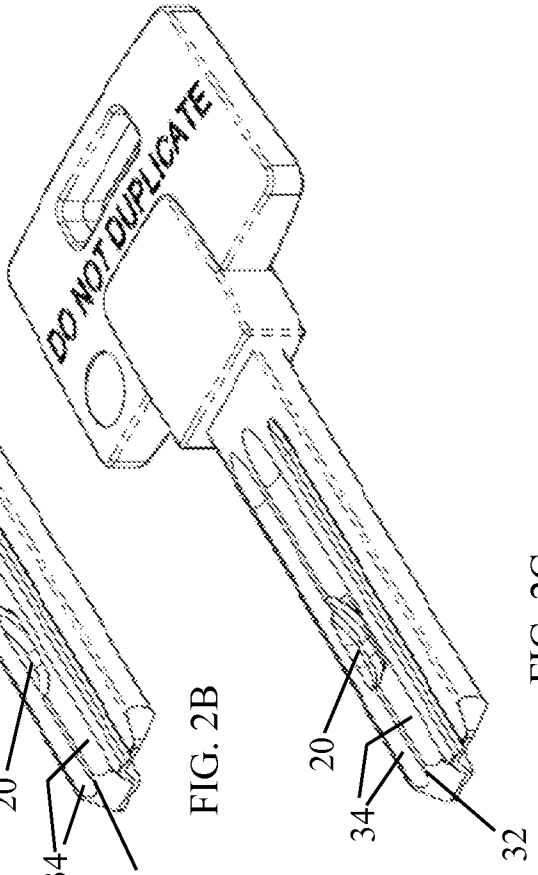

FIG. 2C

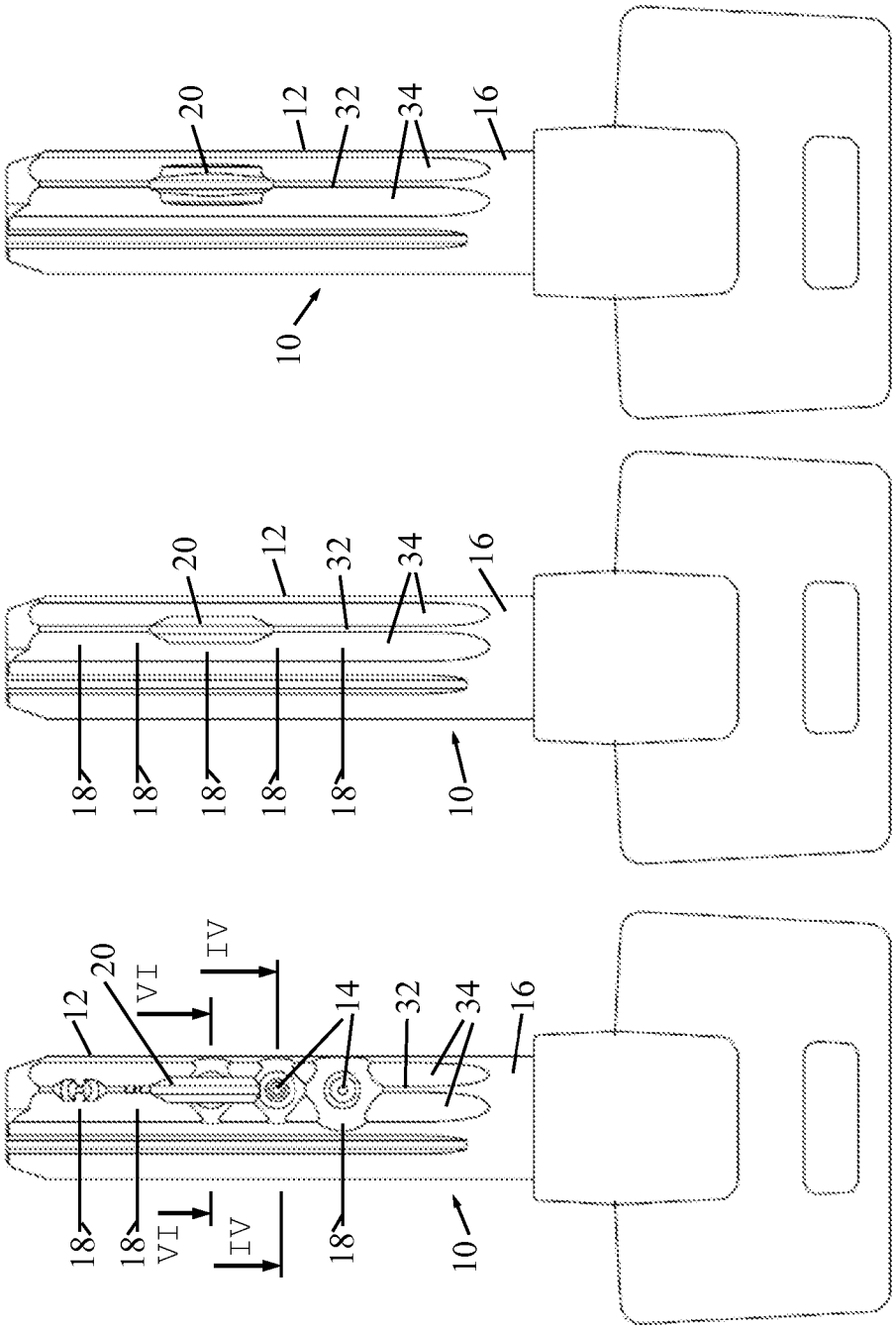

FIG. 3C

FIG. 3B

FIG. 3A

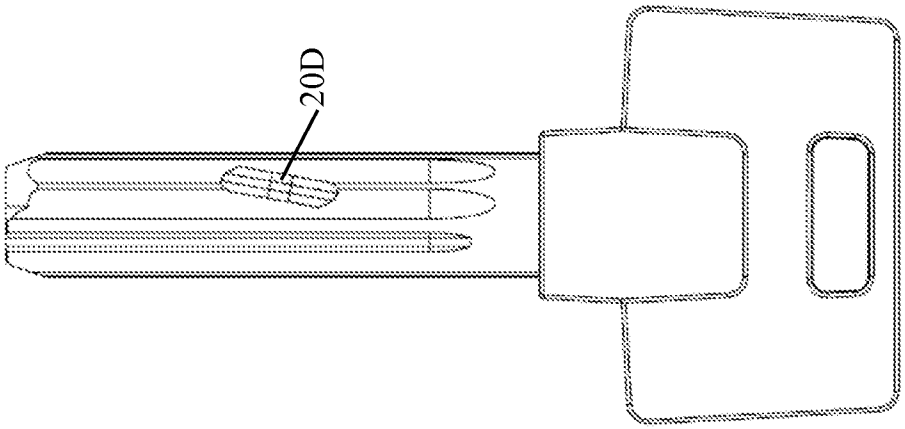

FIG. 3D

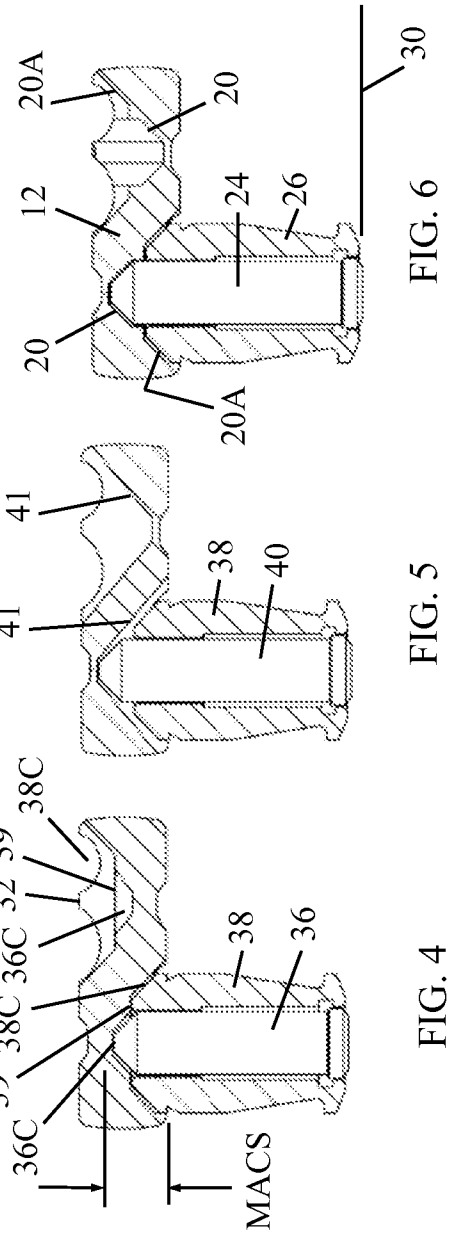

FIG. 4

FIG. 5

FIG. 6

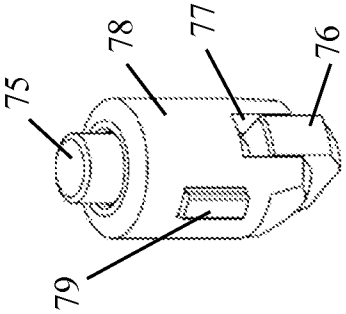

FIG. 7B

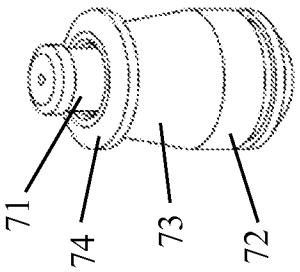

FIG. 7A

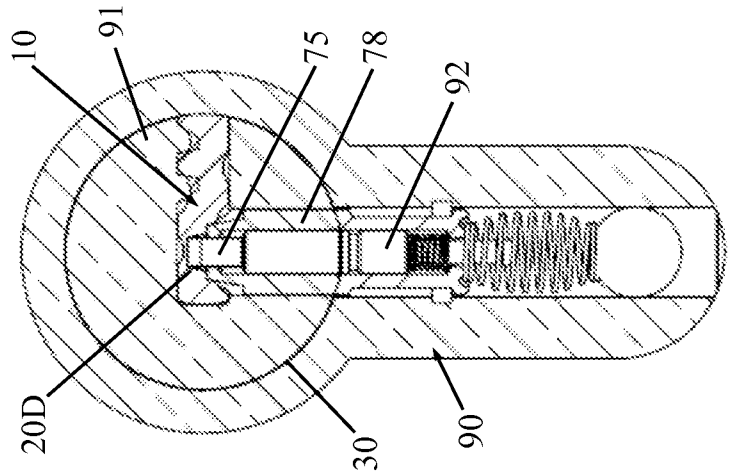

FIG. 8B

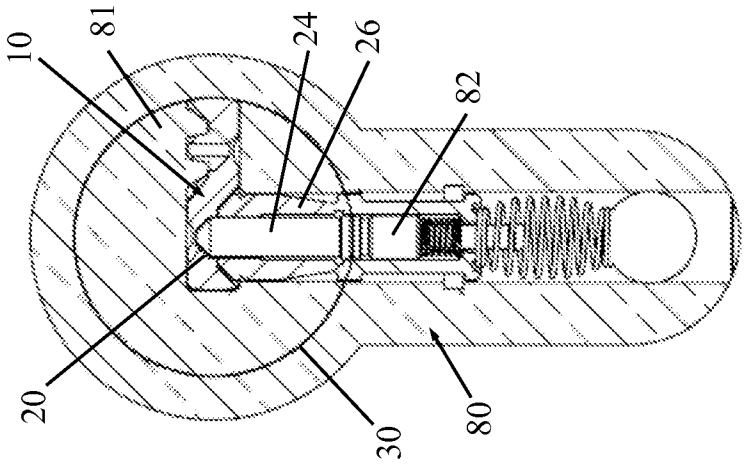

FIG. 8A

REFERENCES CITED IN THE DESCRIPTION

This list of references cited by the applicant is for the reader's convenience only. It does not form part of the European patent document. Even though great care has been taken in compiling the references, errors or omissions cannot be excluded and the EPO disclaims all liability in this regard.

Patent documents cited in the description

- US 20090277239 A **[0006]**
- US 20090301144 A **[0006]**
- US 20120240646 A **[0013]**
- SE 2010051405 W **[0013]**
- WO 2010026381 A **[0014]**
- WO 200401165 A1 **[0015]**

EP2882912

TELESZKÓPOS TÜSKÉKHEZ SZOLGÁLÓ MAXIMÁLIS SZOMSZÉDOS VÁGÁSI ELŐÍRÁS (MACS) KORLÁTOZÁSOK ELTÁVOLÍTÁSA

SZABADALMI IGÉNYPONTOK

1. Kulcs készülék (key device) (10) alkalmazására hengerzárral (cylinder lock) (80), amely tartalmaz egy hengerzár dugót (plug) (81), ahol ez rendelkezik teleszkópos dugó tüskékkel (plug pin), minden teleszkópos dugó tüske tartalmaz belső és külső tüskéket (pin) (24, 26), amelyek mozgathatók egy nyíróvonalhoz (shear line) (30) megfelelő hajtó tüskékkel (driver pin) (82) szemben, amelyek az említett hengerzárban (80) helyezkednek el, a kulcs készülék (10) a következőket tartalmazza:

egy általánosan megnyújtott nyél szakasz (shaft portion) (12), ahol ez tartalmaz egy kulcs kombináció felületet (key combination surface) (16), amely rendelkezik kulcs bevágási állomások (key cut station) (18) sokaságával teleszkópos kulcs bevágások (key cut) (14) kialakításához minden egyes kulcs bevágási állomásnál (18), ahol az említett kulcs bevágási állomásoknak (18) van egy teleszkópos maximális szomszédos vágási előírása [maximum adjacent cut specification (MACS)], amely meghatározza szomszédos kulcs bevágások maximális mélységét érintkezésbe hozáshoz (interfacing) egy hengerzár dugó teleszkópos dugó tüskéjének teleszkópos tüskéivel, ahol a teleszkópos MACS a következő képlettel határozható meg:

$$MACS = \frac{ID - CR}{2DI(\tan\frac{CA}{2})}$$

SZTNH-100025817

ahol a képletben ID = a belső teleszkópos tüske (24) külső átmérője;

CR = a kulcs bevágás (14) vágási gyökere (root) [a fenék („gyökér", „root") hosszúsága];

DI = mélység nagyobbodás (depth increment);

CA = vágási szög (cut angle) [a kulcs bevágás (14) kialakításához alkalmazott vágószerszám fej (cutting tool head) szöge];

azzal jellemezve, hogy ez egy nem-MACS teleszkópos kulcs bevágás (key cut) (20), amely úgy van meghatározva, mint egy olyan kulcs bevágás, amelyet az említett teleszkópos MACS meghatározás (definition) nem korlátoz, és amely az említett kulcs bevágás állomások (18) legalább egyikénél van kialakítva érintkezésbe hozáshoz (interfacing) egy adott teleszkópos dugó tüskének egy első tüskéjével (24), és úgy van méretezve, hogy hagyjon anyagot az említett megnyújtott nyél szakaszban (12) egy másik kulcs bevágás (20A) kialakításához érintkezésbe hozáshoz (interfacing) az említett megadott teleszkópos dugó tüske második tüskéjével (26).

2. Az 1. igénypont szerinti kulcs készülék (10), ahol az említett nem-MACS teleszkópos kulcs bevágás (20) tartalmaz legalább egy bemetszést (furrow), amely az említett megnyújtott nyél szakaszban (12) van kialakítva, ahol az említett bemetszés úgy van elrendezve, hogy kölcsönhatásban legyen (interact) az említett adott teleszkópos dugó tüske említett első tüskéjével (24).

3. Az 1. igénypont szerinti kulcs készülék (10), ahol az említett nem-MACS teleszkópos kulcs bevágásnak (20) vagy az említett speciális teleszkópos kulcs bevágásnak (20) nagyobb mélysége van, mint az a mélység, amelyet az említett MACS határoz meg.

4. Az 1. igénypont szerinti kulcs készülék (10), ahol az említett nem-MACS teleszkópos kulcs bevágás (20) vagy az említett speciális teleszkópos kulcs bevágás (20) az érintkezésbe hozáshoz (interfacing) van kialakítva az említett adott teleszkópos dugó tüske egy belső tüskéjével.

5. Az 1. igénypont szerinti kulcs készülék (10), ahol az említett kulcs kombináció felületet (16) tartalmaz egy támasztó felületet (support surface) (32), amelyen az említett teleszkópos kulcs bevágások (14) legalább részlegesen alakíthatók, és az említett nem-MACS teleszkópos kulcs bevágás (20) vagy az említett speciális teleszkópos kulcs bevágás (20) ki van alakítva az említett támasztó felületben (32).

6. Az 5. igénypont szerinti kulcs készülék (10), ahol az említett nem-MACS teleszkópos kulcs bevágás (20) úgy van méretezve, hogy hagyjon anyagot (leave away) az említett támasztó felületből (32) az említett másik kulcs bevágás kialakításához az érintkezésbe hozáshoz (interfacing) a külső tüskével.

7. A 2. igénypont szerinti kulcs készülék (10), ahol az említett bemetszés (furrow) homorú.

8. A 7. igénypont szerinti kulcs készülék (10), ahol az említett nem-MACS teleszkópos kulcs bevágás (20) sorba van rendezve (align) az említett megnyújtott nyél szakasz (12) hosszanti tengelyével vagy párhuzamos azzal.

9. A 7. igénypont szerinti kulcs készülék (10), ahol az említett nem-MACS teleszkópos kulcs bevágás (20) ferdén dőlt (tilted) az említett megnyújtott nyél szakasz (12) hosszanti tengelyéhez viszonyítva.

10. Az 1-9. igénypontok bármelyike szerinti kulcs készülék (10), ahol az említett megnyújtott nyél szakasznak (12) vannak teleszkópos kulcs bevágásai rajta kialakítva a kulcs bevágási állomásoknál (18) távol (away from) az említett nem-MACS teleszkópos kulcs bevágástól (20).

11. Az 1-10. igénypontok bármelyike szerinti kulcs készülék (10), ahol az említett megnyújtott nyél szakasznak (12) van egy másik kulcs bevágása (20A) az említett nem-MACS teleszkópos kulcs bevágás (20) kulcs bevágási állomásánál (18) kialakítva, érintkezésbe hozáshoz (interfacing) az említett megadott teleszkópos dugó tüske második tüskéjével (26).

12. Kulcs és zár kombináció, amely a következőket tartalmazza:

hengerzár (80), amely pedig a következőket tartalmazza:

forgatható dugó (81) amelynek van egy kulcshornya (keyway), ahol az említett dugó (81) tartalmaz teleszkópos dugó tüskéket,

minden teleszkópos dugó tüske tartalmaz belső és külső tüskéket (pin) (24, 26), amelyek mozgathatók egy nyíróvonalhoz (shear line) (30) megfelelő hajtó tüskékkel (driver pin) (82) szemben, amelyek az említett hengerzárban (80) helyezkednek el, és

egy 1. igénypont szerinti kulcs készülék (10).