J. A. KIESELE.

INVALID'S BACK REST OR SUPPORT.

APPLICATION FILED NOV. 28, 1917.

1,274,277.

Patented July 30, 1918.

2 SHEETS—SHEET 1.

Fig. 1

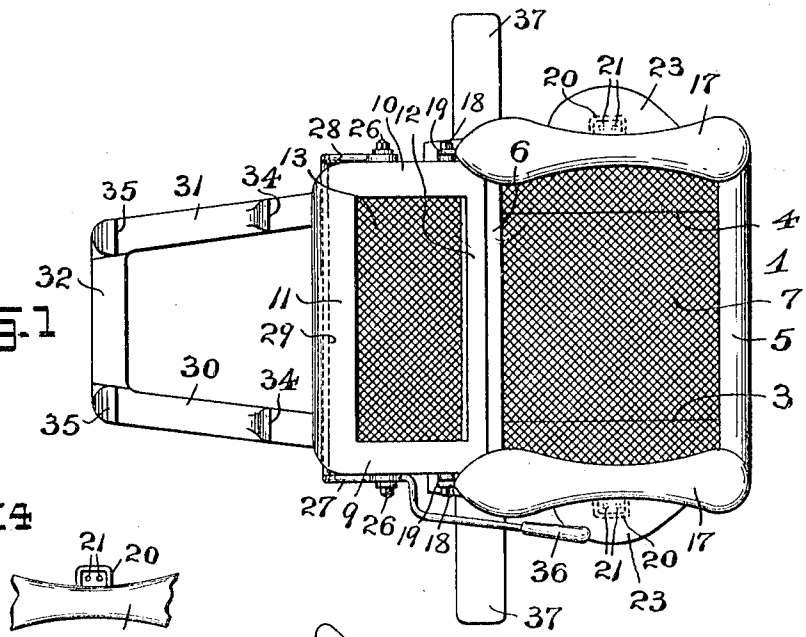

Fig. 4

Fig. 5

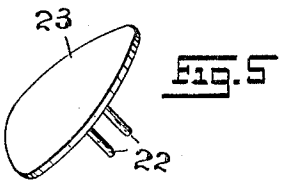

Fig. 2

Fig. 3

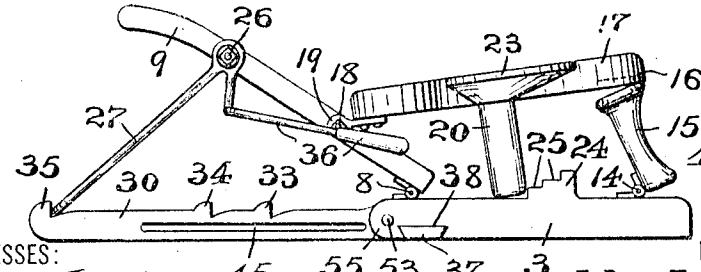

WITNESSES:

Fredk. W. Fraentzel

Eva E. Lesch

INVENTOR:

John A. Kiesele,

BY

Fraentzel and Richards,

ATTORNEYS.

THE NORRIS PETERS CO., PHOTO-LITHO., WASHINGTON, D. C.

J. A. KIESELE.

INVALID'S BACK REST OR SUPPORT.

APPLICATION FILED NOV. 28, 1917.

1,274,277.

Patented July 30, 1918.

2 SHEETS—SHEET 2.

Fig. 6

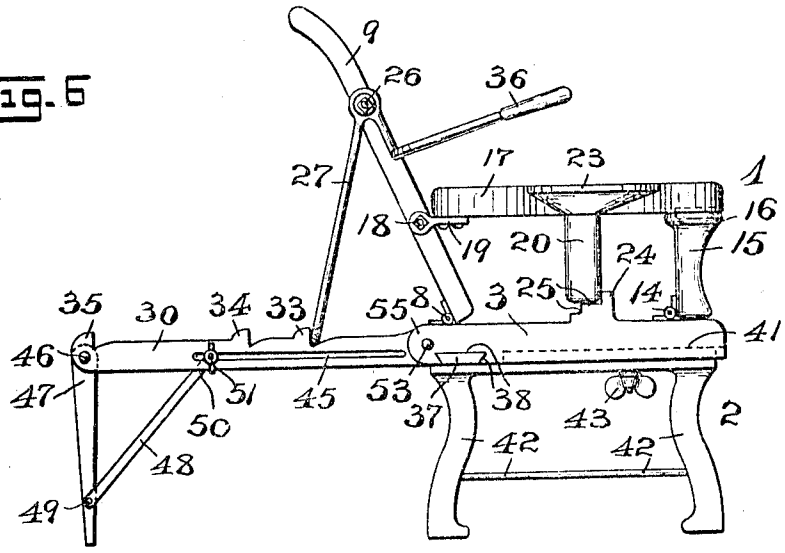

Fig. 7

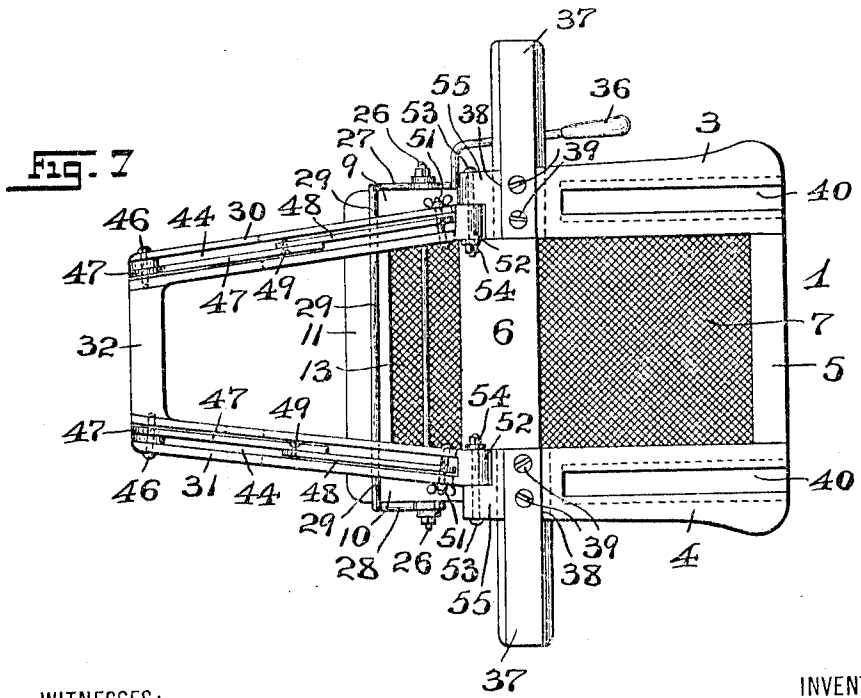

WITNESSES:

Fredk. W. Fraentzel

Eva E. Desch

INVENTOR:

John A. Kiesele,

BY

Fraentzel and Richards

ATTORNEYS.

THE NORRIS PETERS CO., PHOTO-LITHO., WASHINGTON, D. C.

UNITED STATES PATENT OFFICE.

JOHN A. KIESELE, OF MAPLEWOOD, NEW JERSEY.

INVALID'S BACK-REST OR SUPPORT.

1,274,277. Specification of Letters Patent. **Patented July 30, 1918.**

Application filed November 28, 1917. Serial No. 204,301.

To all whom it may concern:

Be it known that I, JOHN A. KIESELE, a citizen of the United States, residing at Maplewood, in the county of Essex and State of New Jersey, have invented certain new and useful Improvements in Invalids' Back-Rests or Supports; and I do hereby declare the following to be a full, clear, and exact description of the invention, such as will enable others skilled in the art to which it appertains to make and use the same, reference being had to the accompanying drawings, and to characters of reference marked thereon, which form a part of this specification.

This invention relates, generally, to improvements in invalids' supports or chairs; and, the present invention has reference, more particularly, to a novel body-rest or support which is adjustable, and is adapted for use directly in the bed, or may be provided with a supporting attachment, whereby the invalid's support or body-rest may be used as a reclining chair out of the bed.

The present invention has for its principal object to provide a novel and simply constructed invalid's support or body-rest which may be used in either manner hereinabove stated, and when used in the bed is provided with means which will act as a proper steadying support, to prevent tilting of the support sidewise, or otherwise, at the same time providing a rest or support which can be quickly and easily adjusted, for the support of the patient in a reclining or sitting posture in the bed.

The invention has for its further object to provide in connection with the arm-rests of the invalid's support, side-members detachably connected with said arm-rests, which are of increased width, so as to provide increased comforting means for the restful support of the arms of the patient thereon, or which may be used as supporting trays or other purposes, such as placing a book or writing tablet thereon.

The device embodying the principles of the present invention is adapted, primarily, in the bed for restful reclining purposes, but when provided with the detachable chair-support is particularly advantageous in the sick-chamber, as a reclining chair, in which the recovering patient may be seated to provide a restful and comfortable condition of the body.

Other objects of the present invention not at this time more particularly enumerated will be clearly understood from the following detailed description of the present invention.

With the various objects of the present invention in view, the said invention consists, primarily, in the novel body-rest or support for invalids hereinafter set forth; and, the invention consists, furthermore, in the novel arrangements and combinations of the several devices and parts, as well as in the details of the construction of the said parts, all of which will be more fully described in the following specification, and then finally embodied in the clauses of the claims which are appended to and which form an essential part of the said specification.

The invention is clearly illustrated in the accompanying drawings, in which:—

Figure 1 is a plan view of an adjustable invalid's body-rest or support, showing one embodiment of the principles of the present invention; and Figs. 2 and 3 are two side elevations of the same, illustrating the back-rest of the device in two of its adjusted positions.

Fig. 4 is a plan view of a fragmentary portion of one of the arm-rests of the device, with the enlarging side-member omitted; and Fig. 5 is a perspective view of one of said side-members, showing one form of such side-member.

Fig. 6 is a side elevation of the invalid's body-rest or support provided with a detachable frame or support, whereby the device is adapted for use as a chair out of the bed; and Fig. 7 is a bottom view of the same, with the detachable chair-like frame-work or support omitted from said view.

Similar characters of reference are employed in all of the said above described views, to indicate corresponding parts.

Referring now to the several figures of the drawings, the reference-character 1 indicates the main portion of a body-rest or support, made according to and embodying the principles of the present invention, and 2 indicates one form of detachable chair-like frame-work or support which may be employed in connection with the said main body-rest or support.

The said main body-rest or support comprises a suitably formed frame consisting, usually, of a pair of side-pieces or members 3 and 4, a front connecting member 5 and a rear connecting member 6, upon which

frame is suitably mounted a seat 7 of cane, or any other desired material.

Pivotally connected with said rear connecting member 6, by means of hinges 8, or other suitable means, is a swinging supporting or reclining back which consists of a pair of side-pieces or members 9 and 10, an upper connecting member 11 and a lower connecting member 12, the frame thus provided having suitably mounted thereon a back-supporting or resting element 13 of cane, or any other desired material.

As shown in the several figures of the drawings, the side-pieces or members 3 and 4 have pivotally connected therewith at the forward ends, by means of hinges 14, or otherwise, suitable posts or members 15, to the upper end-portions of which are pivotally connected by means of hinges 16, or otherwise, rearwardly extending arm-rests, as 17. At their rear ends, these arm-rests are also pivotally connected with the side-members 9 and 10 of the reclining back by means of pivot-pins 18 and the members 19. Any other suitable means of pivotal connection may, however, be employed, if desired. Extending outwardly and downwardly from each arm-rest 17, being suitably secured thereto, is a suitably formed post, as 20, provided in its upper end-portion with holes or perforations 21, for the reception of suitable dowel-pins or extensions, as 22, projecting from the under surface of suitably formed side-members 23. Each side-member 23 is preferably of the marginal configuration shown in the several figures of the drawings, said side-members being readily secured in position upon the sides of the arm-rests 17, so as to provide increased rests or tray-like supports, said members 23 being readily detached from their relative positions with said arm-rests 17 when desired, as will be clearly understood. The said downwardly extending posts 20 are of suitable length, so that the lower ends of the posts may be brought into arrested engagement with suitably formed steps 25 of suitable stop-blocks or elements 24, as shown in Fig. 2 of the drawings or with the upper surface portions of the side-pieces or members 3 and 4 of the seat, as illustrated in Fig. 3 of the drawings. Pivotally connected with the previously mentioned back-rest, preferably upon pins 26 projecting from the side-pieces or members 9 and 10, is a sustaining brace consisting essentially of a pair of side-arms or members 27 and 28 and a connecting bar 29, said bar being slidably disposed upon a pair of rearwardly extending sustaining members 30 and 31 which are connected by a brace 32, and said bar 29 being adapted to be brought into retaining engagement with suitably disposed retaining lugs or projections 33, 34, or 35, extending upwardly from the upper surfaces of said sustaining members 30 and 31, according to the angular adjustment of the back-rest that may be desired. Adjustment of the said sustaining brace, and in consequence thereof to produce the desired angular adjustment of the back-rest, may be produced by the patient or by the nurse in attendance, by means of a suitable lever, as 36, as will be clearly understood from an inspection of Figs. 2 and 3 of the drawings.

To prevent tilting of the invalid's support or rest, when placed in the bed, to either side, the side-pieces 3 and 4 of the seat-member may be provided with laterally and outwardly projecting steadying supports or sustaining members, as 37, which may form integral parts of said side-pieces 3 and 4, or said members 37 may have fixing portions thereof arranged in grooves or slotted portions 38 in said side-pieces 3 and 4, and secured in place by means of screws 39, or other suitable fastening devices.

When the invalid's body-rest or support is to be used in the manner of a chair outside of the bed, the side-pieces or members 3 and 4 of the device are provided in the under surfaces with $\vee$-shaped grooves or channels, as 40, see Fig. 7 of the drawings, into which may be slid correspondingly shaped ribs, as 41, of suitably constructed frame or support 42, the parts when in position, being locked together by means of a thumb-screw or bolt 43, or the locking means. In this case, also, the said rearwardly extending members 30 and 31 are formed in the lower surface-portions with longitudinally extending recesses 44 and elongated openings or slots 45 extending from each recess 44 to the side-faces of each member 30 and 31. At the free end-portion of each member 30 and 31, and extending across the recess 44 is a pivotal pin 46, and pivoted upon each pin 46 is the upper end-portion of a supporting brace or leg 47, the purpose of which will be clearly evident from an inspection of Fig. 6 of the drawings. A sustaining member or brace, as 48, may be pivotally connected, as at 49, with each leg 47, the end-portion 50 of the said braces 48 extending into and being movably disposed with said recesses 44, by means of laterally extending tightening bolts, as 51, which are disposed in the said slots or openings 45, and extend across the recess 44 and through perforations in the end-portions 50 of said braces 48, as will be clearly evident from an inspection of said Figs. 6 and 7 of the drawings.

As shown in said Fig. 7 of the drawings, the said legs or braces 47, as well as the sustaining members 48, can be readily folded into the respective recesses 44, so as to be out of the way, when the standard or base 2 has been detached, and it is desired to use the device in the bed.

Furthermore, as will be noticed from an

inspection of said Fig. 7, the inner end-portions 52 of the said members 30 and 31 may be separably connected by means of bolts 53 and tightening nuts 54 to portions, as 55, of the seat-frame, for the separation of the parts when the device is not in use, as will be evident.

While this arrangement of the various parts is not considered essential, still it is of advantage, as will be clearly evident. It will also be understood, that the said members 30 and 31 may be otherwise connected with and attached to the seat-frame.

I am also aware, that various changes may be made in the general arrangements and combinations of the several devices and parts, as well as in the details of the construction of the said parts, without departing from the scope of the present invention as set forth in the foregoing specification, and as defined in the clauses of the claims which are appended thereto. Hence, I do not limit my present invention to the exact arrangements and combinations of the various devices and parts, as described in the foregoing specification, nor do I confine myself to the exact details of the construction of the said parts, as illustrated in the accompanying drawings.

I claim:—

1. In a device of the character specified, a main seat-member, a back-rest pivotally connected with said seat-member, a sustaining means coöperating with said back-rest for adjusting said back-rest with relation to said seat-member, arm-rests movably disposed with relation to both said back-rest and said seat-member, stop-lugs connected with said seat-member, and means connected with said arm-rests, said means being adapted to be brought into retaining engagement with said stop-lugs.

2. In a device of the character specified, a main seat-member, a back-rest pivotally connected with said seat-member, a sustaining means coöperating with said back-rest for adjusting said back-rest with relation to said seat-member, arm-rests movably disposed with relation to both said back-rest and said seat-member, stop-lugs connected with said seat-member, said stop-lugs being provided with steps, and posts depending from said arm-rests, said posts being adapted to be brought into retaining engagement with the steps of said stop-lugs.

3. In a device of the character specified, a main seat-member, sustaining members projecting rearwardly from said seat-member, a back-rest pivotally connected with said seat-member, a sustaining means cooperating with said rearwardly projecting sustaining members and with said back-rest for adjusting said back-rest with relation to said seat-member, arm-rests movably disposed with relation to both said back-rest and said seat-member, stop-lugs connected with said seat-member, and means connected with said arm-rests, said means being adapted to be brought into retaining engagement with said stop-lugs.

4. In a device of the character specified, a main seat-member, sustaining members projecting rearwardly from said seat-member, a back-rest pivotally connected with said seat-member, a sustaining means cooperating with said rearwardly projecting sustaining members and with said back-rest for adjusting said back-rest with relation to said seat-member, arm-rests movably disposed with relation to both said back-rest and said seat-member, stop-lugs connected with said seat-member, said stop-lugs being provided with steps, and posts depending from said arm-rests, said posts being adapted to be brought into retaining engagement with said stop-lugs.

5. In a device of the character specified, a main seat-member, sustaining members projecting rearwardly from said seat-member, a back-rest pivotally connected with said seat-member, a sustaining means coöperating with said rearwardly projecting sustaining members and with said back-rest for adjusting said back-rest with relation to said seat-member, arm-rests movably disposed with relation to both said back-rest and said seat-member, stop-lugs connected with said seat-member, and means connected with said arm-rests, said means being adapted to be brought into retaining engagement with said stop-lugs, combined with steadying supports projecting laterally from said seat-member to prevent tilting sidewise.

6. In a device of the character specified, a main seat-member, sustaining members projecting rearwardly from said seat-member, a back-rest pivotally connected with said seat-member, a sustaining means coöperating with said rearwardly projecting sustaining members and with said back-rest for adjusting said back-rest with relation to said seat-member, arm-rests movably disposed with relation to both said back-rest and said seat-member, stop-lugs connected with said seat-member, said stop-lugs being provided with steps, and posts depending from said arm-rests, said posts being adapted to be brought into retaining engagement with the steps of said stop-lugs, combined with steadying supports projecting laterally from said seat-member to prevent tilting sidewise.

7. In a device of the character specified, a main seat-member, sustaining members projecting rearwardly from said seat-member, upwardly projecting retaining lugs upon said sustaining members, a back-rest pivotally connected with said seat-member, a sustaining brace consisting of a pair of side-arms pivotally connected with said back-rest, and a connecting bar between said side-arms,

said connecting bar being adapted to be brought into holding engagement with said retaining lugs for adjustment of said back-rest with relation to said seat-member, and means between said rearwardly projecting sustaining members and said seat-member for separably connecting said sustaining members with said seat-member, combined with a chair-like support or base detachably connected with said seat-member.

8. In a device of the character specified, a main seat-member, sustaining members projecting rearwardly from said seat-member, a back-rest pivotally connected with said seat-member, and a sustaining means cooperating with said rearwardly projecting sustaining members and with said back-rest for adjusting said back-rest with relation to said seat-member, combined with a chair-like support or base detachably connected with said seat-member, and sustaining braces connected with said rearwardly projecting sustaining members.

9. In a device of the character specified, a main seat-member, sustaining members projecting rearwardly from said seat-member, a back-rest pivotally connected with said seat-member, and a sustaining means cooperating with said rearwardly projecting sustaining members and with said back-rest for adjusting said back-rest with relation to said seat-member, and means between said rearwardly projecting sustaining members and said seat-member for separably connecting said sustaining members with said seat-member, combined with a chair-like support or base detachably connected with said seat-member, and sustaining braces connected with said rearwardly projecting sustaining members.

10. In a device of the character specified, a main seat-member, sustaining members projecting rearwardly from said seat-member, upwardly projecting retaining lugs upon said sustaining members, a back-rest pivotally connected with said seat-member, and a sustaining brace consisting of a pair of side-arms pivotally connected with said back-rest, and a connecting bar between said side-arms, said connecting bar being adapted to be brought into holding engagement with said retaining lugs for adjustment of said back-rest with relation to said seat-member, combined with a chair-like support or base detachably connected with said seat-member, and sustaining braces connected with said rearwardly projecting sustaining members.

11. In a device of the character specified, a main seat-member, sustaining members projecting rearwardly from said seat-member, upwardly projecting retaining lugs upon said sustaining members, a back-rest pivotally connected with said seat-member, a sustaining brace consisting of a pair of side-arms pivotally connected with said back-rest, and a connecting bar between said side-arms, said connecting bar being adapted to be brought into holding engagement with said retaining lugs for adjustment of said back-rest with relation to said seat-member, and means between said rearwardly projecting sustaining members and said seat-member for separably connecting said sustaining members with said seat-member, combined with a chair-like support or base detachably connected with said seat-member, and sustaining braces connected with said rearwardly projecting sustaining members.

In testimony, that I claim the invention set forth above I have hereunto set my hand this 27th day of November, 1917.

JOHN A. KIESELE.

Witnesses:
FRED'K C. FRAENTZEL,
FRED'K H. W. FRAENTZEL.

Copies of this patent may be obtained for five cents each, by addressing the "Commissioner of Patents, Washington, D. C."