May 21, 1935. L. C. DOANE 2,002,313

LIGHTING APPLIANCE

Filed Dec. 24, 1934 3 Sheets-Sheet 1

Fig. 1.

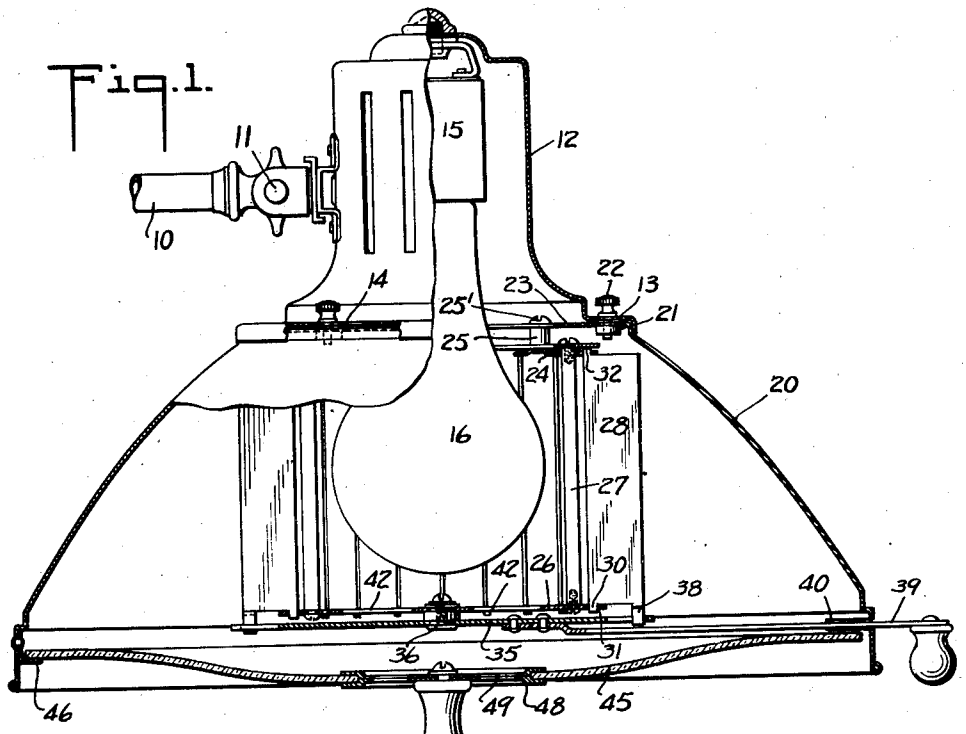

Fig. 2.

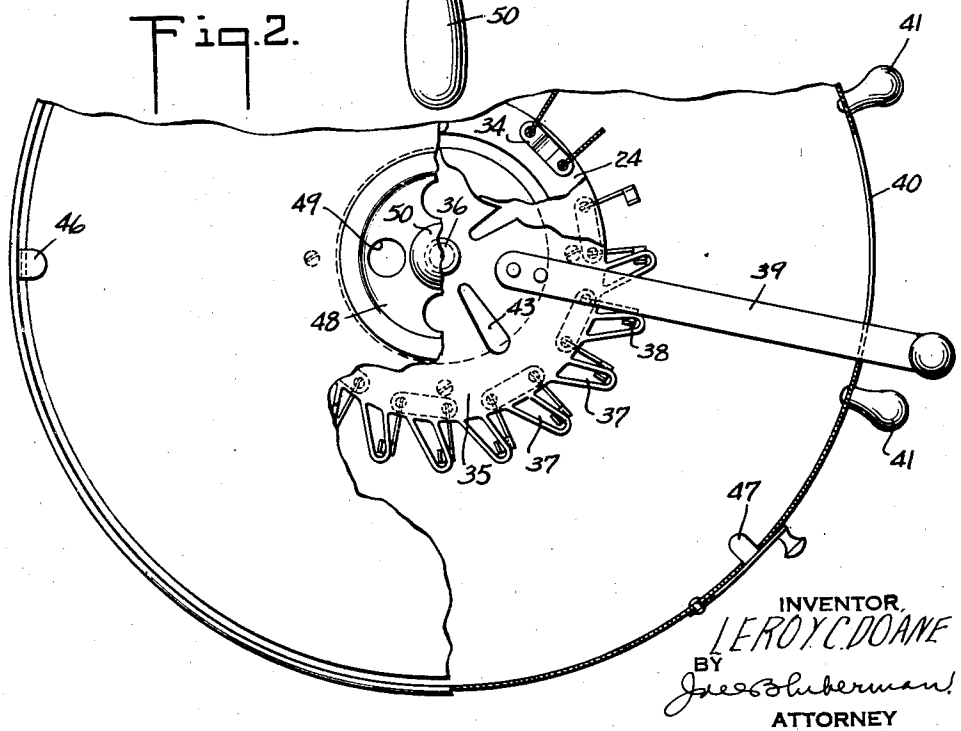

INVENTOR.
LEROY C. DOANE
BY
Jules Silberman
ATTORNEY

May 21, 1935. L. C. DOANE 2,002,313

LIGHTING APPLIANCE

Filed Dec. 24, 1934 3 Sheets-Sheet 2

Fig. 3.

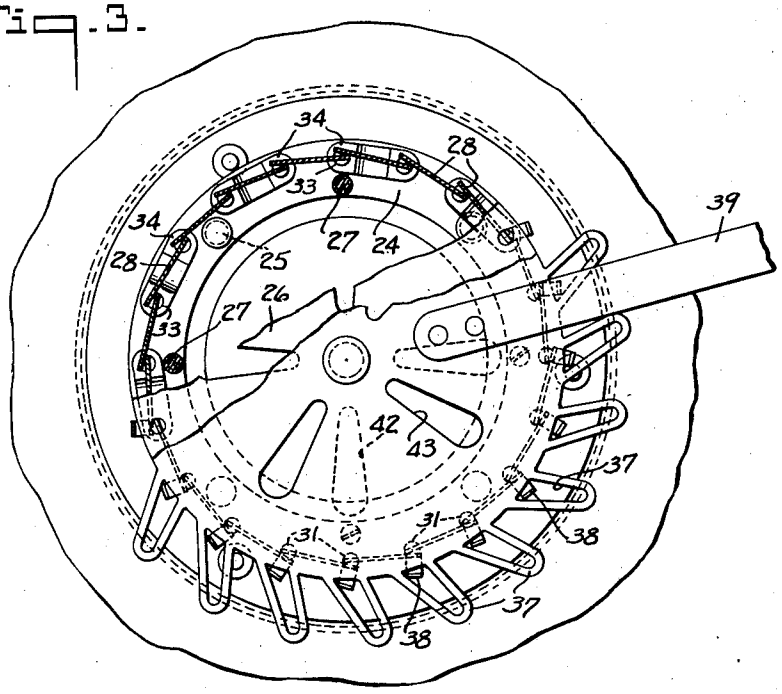

Fig. 4.

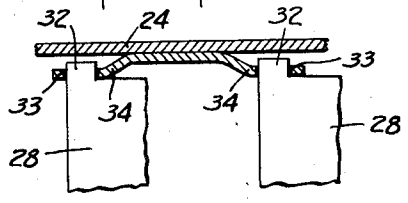

INVENTOR.
LEROY C DOANE
BY
ATTORNEY

May 21, 1935. L. C. DOANE 2,002,313

LIGHTING APPLIANCE

Filed Dec. 24, 1934 3 Sheets-Sheet 3

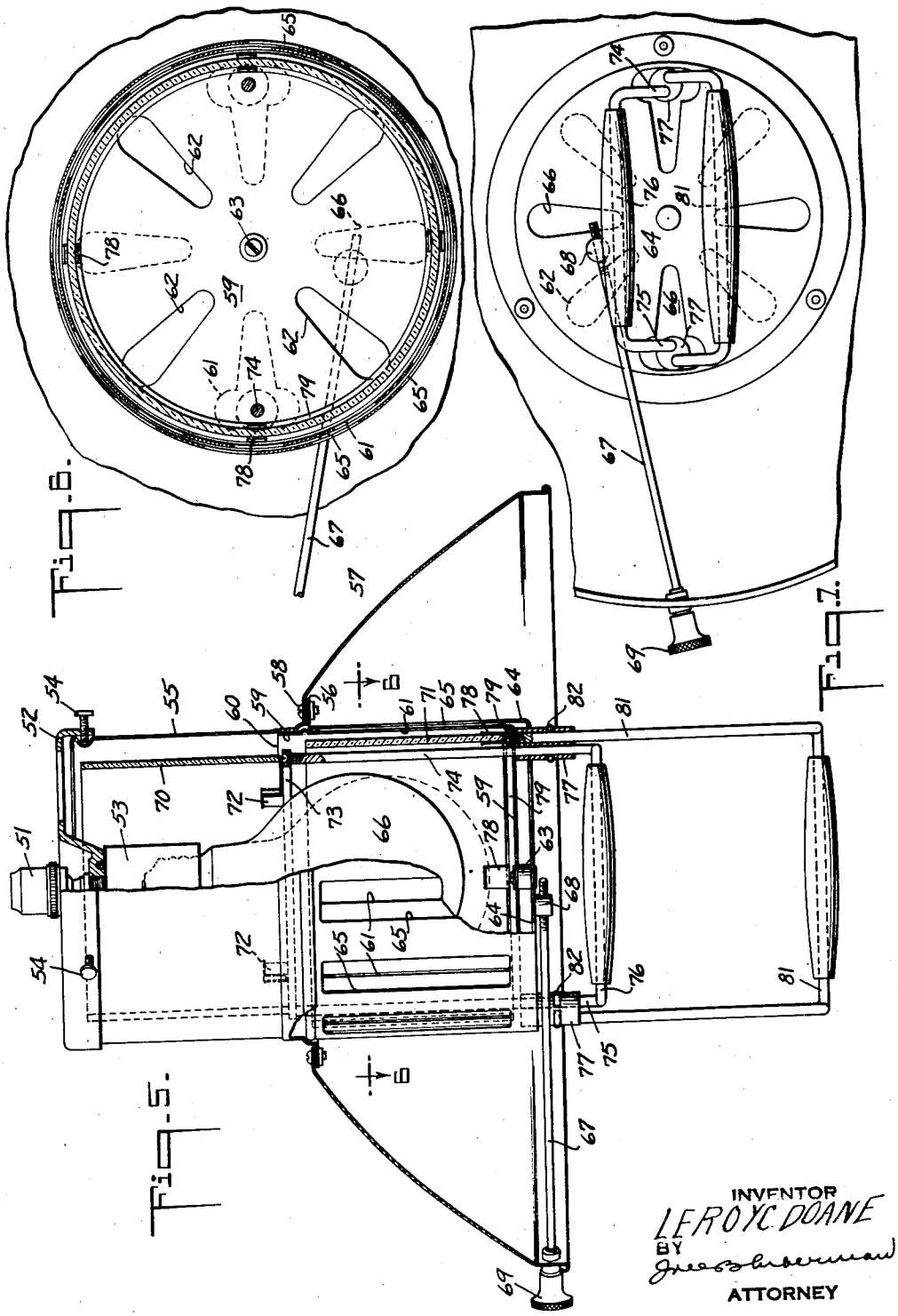

Fig. 6.

Fig. 7.

Fig. 5.

INVENTOR
LEROY C. DOANE
BY
[signature]
ATTORNEY

Patented May 21, 1935 2,002,313

UNITED STATES PATENT OFFICE

2,002,313

LIGHTING APPLIANCE

Leroy C. Doane, Meriden, Conn., assignor to Earl L. Canfield, Hillside, N. J.

Application December 24, 1934, Serial No. 758,896

20 Claims. (Cl. 240—1)

The present invention relates to lighting appliances and is more particularly directed to lighting appliances designed to produce illumination solely by reflection of light.

The lighting appliances contemplated by the present invention are particularly intended for use in providing a variable light source for general or special purposes. For instance where it is used to test visual acuity or the like, which depends upon the light intensity, its color, the direction of the light and the distribution of the light rays in the area being illuminated it is important to maintain all these factors invariable, excepting intensity, and to vary the intensity throughout a wide range, such as, for example, from two to two hundred or more foot candles.

According to the present invention the light beam is produced by means of a reflector of substantially parabolic profile with the light source at the focus. A screen adjacent the light source cuts off direct light so that it does not become admixed with the reflected light. The intensity of the beam of reflected light is varied by some form of light controlling device interposed between the light source and reflector to intercept light falling on the reflector. This intercepting device is so designed that the distribution of the light onto the profile of the reflector remains unaltered so that the distribution of the light reflected is not altered. In order to produce a beam free of striations, the reflector is preferably an aluminum reflector, specially treated to diffuse the rays.

When it is desired to effect a change in the color value of the emitted light, provision is made for the insertion of one or more color screens in the path of the light rays. Inasmuch as these screens are not depended upon for varying the light intensity, it is possible to obtain a variable intensity at constant color.

Other and further objects of the invention will appear as the description proceeds.

The accompanying drawings show, for purposes of illustrating the present invention, two of the many possible embodiments in which the invention may take form, it being understood that the drawings are illustrative of the invention rather than limiting the same. In these drawings:

Fig. 1 is a vertical sectional view through one form of lighting appliance employing movable shutter slats for varying the light intensity;

Fig. 2 is an inverted plan view of the structure shown in Figure 1 with parts broken away and parts in section, the shutter slats being shown in the open position;

Fig. 3 is a view similar to Figure 2 showing the shutter slats in closed position;

Fig. 4 is an enlarged fragmentary view showing a detail of construction;

Fig. 5 is a side elevational view with parts in section showing a modified form of construction;

Fig. 6 is a sectional view on the line 6—6 of Figure 5 looking in the direction of the arrows; and

Fig. 7 is an inverted plan view of the construction shown in Figure 5.

In Figure 1 a supporting arm or bracket is indicated at 10 and a swivel 11. These parts are secured to a socket cover and a reflector supporting stamping 12 having a lower flange 13 provided with elongated slots with enlarged ends 14. The lamp socket is indicated at 15 and the lamp bulb at 16.

A reflector 20 preferably made of aluminum and of suitable profile (approximately parabolic) is detachably supported from the socket cover 12. A suitable form of attachment is indicated in the drawings and it comprises nuts 21 and thumb screws 22. The heads of the thumb screws are adapted to pass through large ends of the slots 14 so that the reflector can be bodily removed from the socket holder for relamping. The inner flange 23 of the reflector supports a ring 24. The openings in this ring and in the flange 23 are large enough to accommodate the lamp bulb. The form of support employed may include spacers 25 and screws 25'.

The ring 24 supports a lower plate 26 by means of spacers 27. A plurality of shutter slats 28 are pivotedly secured between the ring 24 and the plate 26 in the form of construction shown. These slats have pivot extensions 30 which extend down into holes 31 in the plate 26 and similar extensions 32 which extend up through holes 33 in spring members 34. These spring members may be made of thin material and soldered or otherwise secured to the ring 24. Each spring member 34 forms a resilient mounting for two adjacent shutter slats. The springs act to urge the shutter slats down toward the plate 26 and to prevent rattling. An oscillatory plate 35 is mounted on a centrally disposed stud 36 carried on the plate 26. The oscillatory plate 35 has a number of slots 37 to receive extensions 38 carried by the slats 28. An operating arm 39 is secured to the plate 35 and extends out through a slot 40 in the mouth of the reflector.

To change the position of the shutter slats from fully open position of Figure 2 to the fully

closed position of Figure 3, it is merely necessary to swing the arm 39 from one position to the other. To facilitate making this adjustment, fixed knobs 41—41 are carried by the reflector so that one can grasp the movable handle and one or the other of these knobs as desired. It will be noted that when the shutter slats are in the open position they present practically no obstruction to the passage of light out to the reflector. When they are closed they shut off the light going to the reflector. At all times, however, openings are of uniform width extending from top to bottom of the shutter so that the light distribution in axial planes is not altered. Inasmuch as the wedge of direct light passed out between any two adjacent slats reaches the entire profile of the reflector the same as it would if there were no slats, it is obvious that the light distribution is not altered.

The slats are preferably made of chromium plated steel. The light reflected from the plates falls on the reflector and lights up the areas in direct shadow so that the entire surface of the reflector is lighted. These rays are received at angles such that the reflections are well out of the field of the dominant parallel rays so that they do not alter the light pattern of the principal beam.

In the form shown in Figure 1, the screening of the direct light is accomplished by the plate 26 which supports the shutter slats, but it can, of course, be accomplished in any other suitable way, for example, by a cup attached directly to the lamp bulb. Where the lower shutter supporting part is in the form of a plate such as shown at 26, it is usually provided with ventilation holes indicated at 42, and the plate 35 is provided with ventilation holes 43 offset sufficiently to prevent passage of light.

To provide for control of the color of the emitted beam, if desired, a color filter plate 45 of colored glass may be employed. This plate is supported by two fixed clips, one of which is indicated at 46 and a movable clip 47. The color filter glass is supported in a centerpiece 48 having ventilation holes 49 and handle 50.

In the form shown in Figure 5 a suitable support is indicated. It is in the form of a swivel 51 supporting a cover member 52 and lamp socket 53. The cover member 52 has a depending flange provided with a number of supporting screws 54. These screws detachably support the reflector and light controlling elements. A tubular housing and reflector support is indicated at 55. It is outwardly flanged at 56 and a reflector 57 similar to the reflector 20 is secured to this flange by bolts indicated at 50.

A cup shaped stamping 59 is welded or otherwise secured at its upper edge 60 to the lower part of the tubular member 55. This stamping has vertical slots indicated at 61. The bottom of the stamping is preferably provided with ventilation holes indicated at 62. A pendent pivot member 63 is secured to the center of the bottom of the cup shaped member 59 and this in turn supports another cup shaped stamping 64, a slightly larger diameter than the stamping 59. The stamping 64 has vertical slots 65 and bottom openings 66 for ventilation. The larger cup shaped member 64 is angularly adjustable about the axis of the lighting appliance so that the opening 65 may be moved opposite the opening 61, or adjusted to more or less close these openings and thereby control the amount of light which passes from the light source 66 to the reflector 57. The angular adjustment of the movable cup shaped member may be accomplished by means of a threaded rod 67 passing through a threaded post 68 carried by the lower stamping. The rod 67 has a thumb piece 69 outside of the reflector.

To provide for color control, color matching and the like, the structure shown in Figures 5 to 7 is provided with two cylinders 70 and 71, each preferably made of transparent glass of the desired color. The smaller cylinder 70 is supported in clips 72 secured on the upper face of a ring 73. This ring is supported on the ends of 74 and 75 of the bent rod 76. The rod passes up through holes in guides 77 secured to the bottom of the fixed stamping 59. To adjust the height of the cylinder 70, it is merely necessary to raise or lower the bent rod 76. When no color control is desired cylinder 70 is in the upper position and housed within the tubular member 55. The outer cylinder 71 is similarly supported in clips 78 carried on a ring 79 secured to the upper ends of the U-shaped rod 81. This rod extends through holes in the guides 77 and is adjusted up and down as above described. Friction springs 82 are carried in slots in the guide members 77 and bear on the rods to hold the cylinders in the adjusted position.

From the foregoing it is apparent that one is able to obtain from the structures such as contemplated herein a wide variation in the intensity of the beam of light produced by the reflector, and that this variation in intensity is accomplished without altering the light pattern of the emtted beam, and without change in the color of the beam unless such change is desired. This may be obtained by adjusting the colored glass parts into or out of position.

It is obvious that the invention may be embodied in many forms and constructions within the scope of the claims, and I wish it to be understood that the particular forms shown are but two of the many forms. Various modifications and changes being possible, I do not otherwise limit myself in any way with respect thereto.

What is claimed is:

1. In a lighting appliance, the combination with a fixed light source of constant intensity and an outwardly flaring reflector for producing a beam of reflected light of fixed pattern from said source, and a screen for preventing admixture of direct light, of a light intercepting means between the light source and reflector for varying the intensity of the light in said beam without changing the light pattern from the reflector.

2. In a lighting appliance, the combination with a fixed light source of constant intensity and an outwardly flaring reflector for producing a beam of reflected light of fixed pattern from said source, and a screen for preventing admixture of direct light, of a light intercepting means between the light source and reflector for varying the intensity of the light in said beam without changing the light pattern from the reflector, and a color screen for altering the color of the beam without changing the light pattern.

3. A lighting appliance as claimed in claim 1, wherein the light intercepting means has axially extending openings of uniform width extending from the mouth to the rear of the reflector.

4. In combination, a light source, an open mouthed reflector having a profile for reflecting light into a beam of predetermined spread, a screen for preventing admixture of direct light, and an adjustable light intercepting device to

vary the amount of light which falls on the reflector without affecting the distribution in axial planes of the light transmitted through the device, whereby the spread of the corresponding reflected beam is unaltered.

5. In combination, a light source, an open mouthed reflector having a profile for reflecting light into a beam of predetermined spread, a screen for preventing admixture of direct light, and an adjustable light intercepting device to vary the amount of light which falls on the reflector without affecting the distribution in axial planes of the light transmitted through the device, whereby the spread of the corresponding reflecting beam is unaltered, said device including movable members regularly disposed about the surface of a cylinder to intercept wedges of light of different angular extent.

6. In combination, a light source, an open mouthed reflector having a profile for reflecting light into a beam of predetermined spread, a screen for preventing admixture of direct light, and a variable opening shutter between the light source and reflector, the shutter having axially extending openings to permit the light transmitted therethrough to fall on the entire profile of the reflector whereby the spread of the reflected beam is unaltered.

7. In combination, a light source, an open mouthed reflector having a profile for reflecting light into a beam of predetermined spread, a ring above the light source, a plurality of axially extending slats pivotally secured to the ring, supporting means for pivotally supporting the lower end of the slats, means to swing the slats from a position where they are radial and intercept substantially no light to a position where they closed and intercept substantially all the light, and a screen for preventing the emission of direct light into said reflected beam.

8. The combination set forth in claim 7, characterized in that the slat shifting plate is spaced below the screen and in that the plate and screen have ventilation holes out of alignment.

9. The combination set forth in claim 7, wherein the pivotal supports for the slats include springs exerting axial pressure to keep the slats from rattling.

10. In combination, a light source, an open mouthed reflector having a profile for reflecting light into a beam of predetermined spread, a ring above the light source, a plurality of axially extending slats pivotally secured to the ring, supporting means for pivotally supporting the lower ends of the slats, an oscillatory plate pivoted from the slat support and connected with the slats to swing the slats from a position where they are radial and intercept substantially no light to a position where they closed and intercept substantially all the light, and a screen for preventing the emission of direct light into said reflected beam.

11. In combination, a light source, an open mouthed reflector having a profile for reflecting light into a beam of predetermined spread, a ring above the light source, a plurality of axially extending slats pivotally secured to the ring, supporting means for pivotally supporting the lower ends of the slats, at oscillatory plate pivoted from the slat support and connected with the slats to swing the slats from a position where they are radial and intercept substantially no light to a position where they closed and intercept substantially all the light, an operating handle carried by the plate and extending out through the reflector, and a screen for preventing the emission of direct light into said reflected beam.

12. A light controlling shutter, comprising a plate, a ring spaced from the plate and fixedly secured parallel to the plate, a plurality of shutter slats pivotally supported between the plate and ring and annularly disposed so as to receive a light source, and an oscillatory plate having connections with the shutter slats to swing the slats in unison.

13. A light controlling shutter, comprising a circular plate, a circular ring spaced from the plate and fixedly secured parallel to the plate, a plurality of shutter slats pivotally supported between the plate and ring and annularly disposed so as to receive a light source, and an oscillatory plate pivotally secured to the plate and having connections with the shutter slats to swing the slats in unison.

14. A light controlling shutter, comprising a plate, a ring spaced from the plate and fixedly secured parallel to the plate, a plurality of shutter slats pivotally supported between the plate and ring and annularly disposed so as to receive a light source, and an oscillatory plate having connections with the shutter slats to swing the slats in unison, the two plates being parallel and having ventilation holes therein, the holes being offset to prevent escape of direct light.

15. A light controlling shutter, comprising a circular plate, a circular ring spaced from the plate and fixedly secured parallel to the plate, a plurality of shutter slats pivotally supported between the plate and ring and annularly disposed so as to receive a light source, and an oscillatory plate pivotally secured to and extending beyond the first plate, the periphery of the oscillatory plate being provided with slots to receive extensions on the slats and shift the slats in unison.

16. A light controlling device, comprising an open mouthed reflector of circular cross section, an axially disposed light source, a co-axial ring secured inside the reflector near the small diameter portion thereof, a plate secured to the ring near the mouth of the reflector, a plurality of shutter slats pivotally secured to both the ring and the plate, and means for operating the slats in unison.

17. In combination, a light source, an open mouthed reflector having a profile for reflecting light into a beam of predetermined spread, a screen for preventing admixture of direct light with the beam of reflected light, a variable opening shutter between the light source and reflector, the shutter having axially extending openings to permit the light transmitted therethrough to fall on the entire profile of the reflector whereby the spread of the reflected beam is unaltered, and a translucent color controlling screen removably carried across the mouth of the reflector.

18. In combination, a light source, an open mounted reflector having a profile for reflecting light into a beam of predetermined spread, a screen for preventing admixture of direct light with the beam of reflected light, and a variable opening shutter between the light source and reflector, said shutter comprising a fixed cylinder about the light source and a concentric cylinder angularly adjustable thereto, the cylinder walls having longitudinally extending slots adapted to be brought into registry to control the proportion of light flux emitted which falls on the reflector.

19. In combination, a light source, an open mouthed reflector having a profile for reflecting light into a beam of predetermined spread, a screen for preventing the admixture of direct light with the beam of reflected light, a variable opening shutter between the light source and reflector, and an adjustable color controlling cylinder movable from a position where it intercepts the light falling on the reflector to a position out of the path of the light rays which fall on the reflector.

20. In combination, a light source, an open mouthed reflector having a profile for reflecting light into a beam of predetermined spread, a screen for preventing the admixture of direct light with the beam of reflected light, a variable opening shutter between the light source and reflector, the shutter having axially extending openings to permit the light transmitted therethrough to fall on the entire profile of the reflector whereby the spread of the reflected beam is unaltered, and an adjustable color controlling cylinder movable from a position where it intercepts the light falling on the reflector to a position out of the path of the light rays which fall on the reflector.

LEROY C. DOANE.