Jan. 19, 1965 J. R. BROWN, JR., ETAL 3,166,730

ANNULAR ELECTROSTRICTIVE TRANSDUCER

Filed Sept. 29, 1959 2 Sheets-Sheet 1

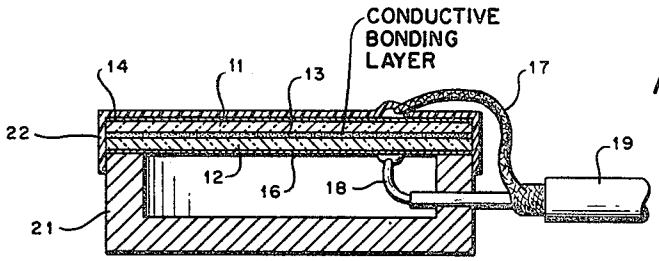

PRIOR ART

Fig. 1

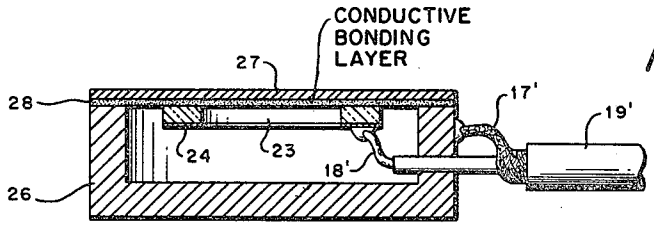

Fig. 2

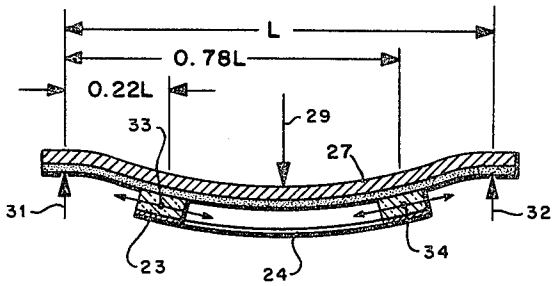

Fig. 3

INVENTORS
JAMES R. BROWN, JR.
JOHN D. WALLACE
BY
AGENT

Jan. 19, 1965 J. R. BROWN, JR., ETAL 3,166,730

ANNULAR ELECTROSTRICTIVE TRANSDUCER

Filed Sept. 29, 1959 2 Sheets-Sheet 2

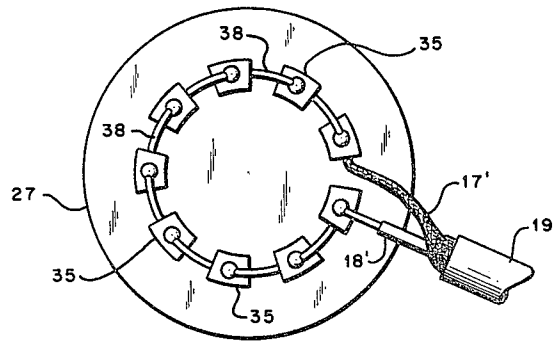

Fig. 4

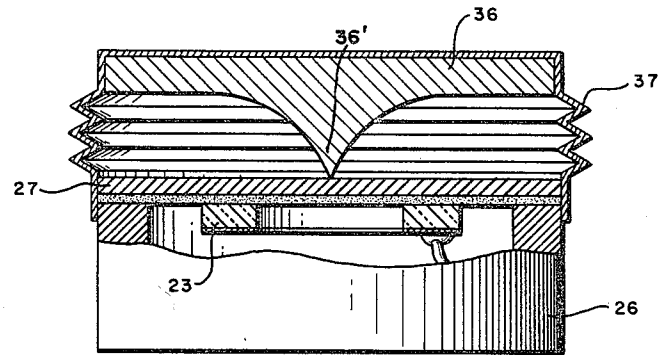

Fig. 5

INVENTORS
JAMES R. BROWN, JR.
JOHN D. WALLACE
BY
AGENT

United States Patent Office 3,166,730 Patented Jan. 19, 1965

3,166,730

ANNULAR ELECTROSTRICTIVE TRANSDUCER

James R. Brown, Jr., Hatboro, and John D. Wallace, Oreland, Pa., assignors to the United States of America as represented by the Secretary of the Navy

Filed Sept. 29, 1959, Ser. No. 843,314
16 Claims. (Cl. 340—10)
(Granted under Title 35, U.S. Code (1952), sec. 266)

The invention described herein may be manufactured and used by or for the Government of the United States of America for governmental purposes without the payment of any royalties thereon or therefor.

The present invention relates to an electromechanical transducer and more particularly to an electromechanical transducer embodying an annulus of a ceramic material. While not restricted thereto, the invention is particularly useful when embodied in a hydrophone for use in an underwater acoustical apparatus.

Certain ceramic materials such as barium titanate exhibit piezoelectric properties if prepolarized by the application thereto of a high intensity unidirectional electrostatic field. Piezoelectric activity occurs largely in a direction parallel to the direction of polarization.

Unlike single crystal piezoelectric substances such as Rochelle salt and quartz, barium titanate or like ceramic materials, being polycrystalline, may be easily formed into a wide variety of sizes and shapes. The ceramic material may first be formed as desired and then exposed to a polarizing field to thereby impart to the structure the desired piezoelectric properties.

While barium titanate has been mentioned specifically it is to be understood that the invention is not restricted thereto. Other ceramic materials having similar properties are known to the art. Some of these materials are described in Wainer Patents 2,402,515, 2,402,516 and 2,402,518. Hereinafter, these materials will be simply termed ceramic.

For a more extended discussion of the electromechanical properties of ceramic materials reference may be made, for example, to an article entitled "Titanate Ceramics for Electromechanical Purposes," by Hans Jaffe, which appears in Industrial and Engineering Chemistry, vol. 42, No. 2 (February 1950), at pages 264 through 268.

In underwater acoustical applications where the transducers are subject to large hydrostatic forces it has heretofore been difficult to construct a ceramic transducer which ideally combines desired electrical and physical properties. Hydrophones, or the like, usually employ ceramic transducers in either disc or tubular form. Thin ceramic discs and thin walled ceramic tubes provide optimum electrical characteristics but are fragile and easily subject to fracture by hydrostatic forces.

The present invention overcomes this difficulty by providing a transducer structure embodying a ceramic annulus adhered to a diaphragm at points of maximum strain and minimum stress. Embodiments of the invention provide transducers which are considerably more sensitive and which exhibit better frequency response than similar transducers known in the art, one of which is described herein. The invention therefore may also be employed with advantage in application where physical strength is not of primary concern.

Accordingly it is a general object of the invention to provide an improved electromechanical transducer.

It is a further and more specific object of the present invention to provide a ceramic electromechanical transducer exhibiting optimum electrical and physical characteristics.

Other objects and many of the attendant advantages of this invention will be readily appreciated as the same becomes better understood by reference to the following

detailed description when considered in connection with the accompanying drawings wherein:

FIG. 1 is a simplified view in cross section of an illustrative prior art ceramic transducer.

FIG. 2 is a cross sectioned view of an illustrative embodiment of the invention.

FIG. 3 is a cross sectioned view of the diaphragm and ceramic annulus portion of the embodiment of FIG. 2 illustrating certain principles of the present invention.

FIG. 4 shows a segmented annulus which may be used in embodiments of the invention.

FIG. 5 illustrates still another embodiment of the invention wherein there is provided a structure for concentrating stress upon the diaphragm.

Referring now to FIG. 1, which illustrates a typical prior art transducer, there is shown a pair of ceramic discs 11, 12 bonded together by a conductive layer, which may comprise, for example, an epoxy resin impregnated with silver. Conductors 17, 18 of a coaxial lead 19 are soldered or otherwise electrically connected to the exposed surfaces of discs 11, 12 which may be silvered as indicated by reference numerals 14, 16. The structure thus far described is affixed to a rigid cup shaped member 21 by a flexible sleeve 22.

Prior to assembly, discs 11, 12 are prepolarized by being exposed to a high intensity unidirectional electrostatic field applied in a direction normal to the plane surfaces of the discs. Care must be taken during assembly to insure that discs 11, 12 are prepolarized in the same direction. The device would otherwise be inoperative.

Discs 11, 12 vibrate in the manner of a diaphragm in response to a compressional wave impinging thereon. Vibration of the discs causes a change in the dimensions thereof in the direction of prepolarization thus generating an E.M.F., applied to conductors 17, 18, that varies in amplitude and frequency in accordance with the amplitude and frequency of the impinging compressional wave.

Hydrophones constructed in the manner described above are not usable at extreme depths since hydrostatic forces acting thereon fracture the ceramic discs rendering the device inoperative.

The fracture resistance of the transducer may be augmented by increasing the thickness of the ceramic discs. The attendant degradation of the electrical characteristics of the transducer, however, is unacceptable.

A partial solution to the problem has been accomplished by filling the cavity formed by the ceramic discs and the cup shaped member with a semi-elastic material such as silicon putty. Unfortunately, this expedient impairs the frequency response to the transducer and diminishes the sensitivity thereof because of the damping effect exercised by the semi-elastic material.

Referring now to FIG. 2, which illustrates a preferred embodiment of the invention there is shown a prepolarized annulus 23 of ceramic material, the plane surfaces of which may be silvered. One surface is indicated by the reference numeral 24. For clarity of illustration, the axial dimension of annulus 23 has been greatly exaggerated. A metallic conductive diaphragm member 27 is bonded to annulus 23 and to a metallic conductive cup shaped member 26 by a conductive layer 28 which may, as in prior art devices, comprise an epoxy resin impregnated with silver. Conductors 17', 18' of a coaxial lead 19' may be soldered or otherwise electrically connected to member 26 and silvered surface 24 of annulus 23, respectively.

The mode operation of the invention may be better understood by reference to FIG. 3 which illustrates the diaphragm and ceramic annulus portions of FIG. 2 in operative condition where the flexure of the members has been exaggerted, again for clarity of illustration. As will be more fully discussed below, annulus 24 is located on

diaphragm 27 at the points of minimum stress and maximum strain occurring therein.

It may be assumed that hydrostatic forces and impinging compressional waves act uniformly over the surface of diaphragm 27. These forces are represented in FIG. 3 by an arrow 29. Since diaphragm 27 is bonded to member 26, any diametrical segment thereof may be regarded as a uniformly loaded beam clamped at both ends. The equivalent clamping points are indicated in FIG. 3 by arrows 31, 32.

By reference to the portion of any standard Mechanical Engineer's Handbook wherein beams of the character described above are discussed, it may be shown that the points of minimum stress and maximum strain occur in diaphragm 27 at approximately 0.22L and 0.78L where L is the free length of any diametrical segment of the diaphragm.

By reference to FIG. 3, it will be seen the axis of annulus 23, represented by the origins of arrows 33, 34, is located with respect to the diaphragm 27 at the points of minimum stress and maximum strain. Accordingly, upon application of a compressional wave to diaphragm 27, annulus 23 will deform in the manner indicated in FIG. 3 by oppositely directed arrows 33, 34, decreasing the axial dimension of the annulus. An E.M.F., having characteristics determined by the character of the compressional wave, will consequently be generated and applied to conductors 17', 18'.

The transducer structure described is not only fracture resistant to a high degree but also, in comparison to prior art transducers, has excellent sensitivity, frequency response, and impedance characteristics.

Since, in a transducer constructed in accordance with the principles of the invention, it is not necessary for the ceramic element to be unitary, annulus 23 may be segmented, as indicated by the reference numeral 35 in FIG. 4. In this form of the invention, the epoxy resin bonding material is not silver impregnated and is therefore not conductive. Segments 35 may be electrically connected in series by conductive elements 38 to conductors 17', 18' to thereby greatly increase the output signal level of the transducer.

It has been determined that the sensitivity and frequency response of a transducer constructed in accordance with the present invention may be augmented if the forces applied thereto are concentrated at the center of the diaphragm instead of being distributed over the surface thereof. An embodiment of the invention is illustrated in FIG. 5 wherein there is provided a force concentrating member 36 having the apex of a cone shaped portion 36' thereof bearing upon the center of diaphragm 27 and resiliently mounted by a flexible member such as a bellows 37.

Obviously many modifications and variations of the present invention are possible in light of the above teachings. It is therefore to be understood that within the scope of the appended claims the invention may be practiced otherwise than as specifically described.

What is claimed is:

1. An electromechanical transducer comprising: a circular diaphragm; means bonded to and supporting said diaphragm at the periphery thereof; an electrostrictive prepolarized ceramic annulus; means bonding said annulus to said diaphragm wherein the annular axis is located at the portions of said diaphragm displaced from the periphery thereof a distance equal to 0.22L, where L is the free length of any diametrical segment of said diaphragm, and means electrically connecting a pair of conductors to said annulus.

2. The combination of claim 1 wherein said annulus is segmented, and wherein there is provided means to electrically interconnect said segments.

3. The combination of claim 1 wherein there is provided a cone shaped member, means resiliently mounting said member adjacent said diaphragm with the apex of said member in contact with the center of said diaphragm.

4. The combination of claim 4 wherein said annulus is segmented, and wherein there is provided means to electrically interconnect said segments.

5. The combination of claim 1 wherein said means to peripherally support said diaphragm comprises a rigid cup shaped member with the lip portions thereof bonded to said diaphragm.

6. The combination of claim 5 wherein said annulus is segmented and wherein there is provided means to electrically interconnect said segments.

7. The combination of claim 5 wherein there is provided a cone shaped member, means resiliently mounting said member adjacent said diaphragm with the apex of said member in contact with the center of said diaphragm.

8. The combination of claim 7 wherein said annulus is segmented and wherein there is provided means to electrically interconnect said segments.

9. An electromechanical transducer comprising: a diaphragm; means to support said diaphragm at the periphery thereof; said diaphragm having surface portions thereof located at points of minimum stress and maximum strain when a force is applied to the surface of said diaphragm; an electrostrictive, prepolarized ceramic annulus; means bonding said annulus to a surface of said diaphragm with the annular axis of said annulus located at said points of minimum stress and maximum strain; and means electrically connecting a pair of conductors to said annulus.

10. The combination of claim 9 wherein said annulus is segmented and wherein there is provided means to electrically interconnect said segments.

11. The combination of claim 9 wherein there is provided a cone shaped member, means resiliently mounting said member adjacent said diaphragm with the apex of said member in contact with the center of said diaphragm.

12. The combination of claim 11 wherein said annulus is segmented, and wherein there is provided means to electrically interconnect said segments.

13. The combination of claim 9 wherein said means to peripherally support said diaphragm comprises a rigid cup shaped member with the lip portions thereof affixed to said diaphragm.

14. The combination of claim 13 wherein said annulus is segmented and wherein there is provided means to electrically interconnect said segments.

15. The combination of claim 13 wherein there is provided a cone shaped member, means resiliently mounting said member adjacent said diaphragm with the apex of said member in contact with the center of said diaphragm.

16. The combination of claim 15 wherein said annulus is segmented and wherein there is provided means to electrically interconnect said segments.

References Cited by the Examiner

UNITED STATES PATENTS

2,477,596	8/49	Gravley	340—10 X
2,607,858	8/52	Mason	340—10 X
2,741,754	4/56	Miller	340—10
2,949,772	8/60	Kritz	340—10 X
2,961,637	11/60	Camp	340—10
2,988,728	6/61	Marlow	340—10

OTHER REFERENCES

"Machinery's Handbook," by Erik Oberg and F. D. Jones, eleventh edition (1943), pp. 374, 375, 382, 383, 400, 402, and 403, The Industrial Press, New York.

CHESTER L. JUSTUS, *Primary Examiner.*

FREDERICK M. STRADER, *Examiner.*

UNITED STATES PATENT OFFICE

CERTIFICATE OF CORRECTION

Patent No. 3,166,730 January 19, 1965

James R. Brown, Jr., et al.

It is hereby certified that error appears in the above numbered patent requiring correction and that the said Letters Patent should read as corrected below.

Column 4, line 5, for the claim reference numeral "4" read -- 3 --.

Signed and sealed this 27th day of July 1965.

(SEAL)
Attest:

ERNEST W. SWIDER
Attesting Officer

EDWARD J. BRENNER
Commissioner of Patents

UNITED STATES PATENT OFFICE

CERTIFICATE OF CORRECTION

Patent No. 3,166,730 January 19, 1965

James R. Brown, Jr., et al.

It is hereby certified that error appears in the above numbered patent requiring correction and that the said Letters Patent should read as corrected below.

Column 4, line 5, for the claim reference numeral "4" read -- 3 --.

Signed and sealed this 27th day of July 1965.

(SEAL)
Attest:

ERNEST W. SWIDER
Attesting Officer

EDWARD J. BRENNER
Commissioner of Patents