Nov. 17, 1925. 1,561,495

A. C. THOMPSON

ELECTRICAL CONNECTER

Filed Nov. 1, 1924

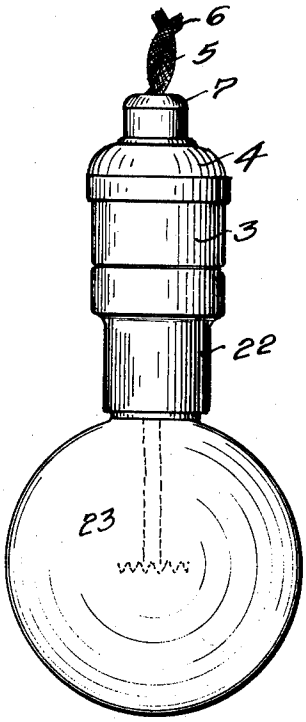

Fig. 1

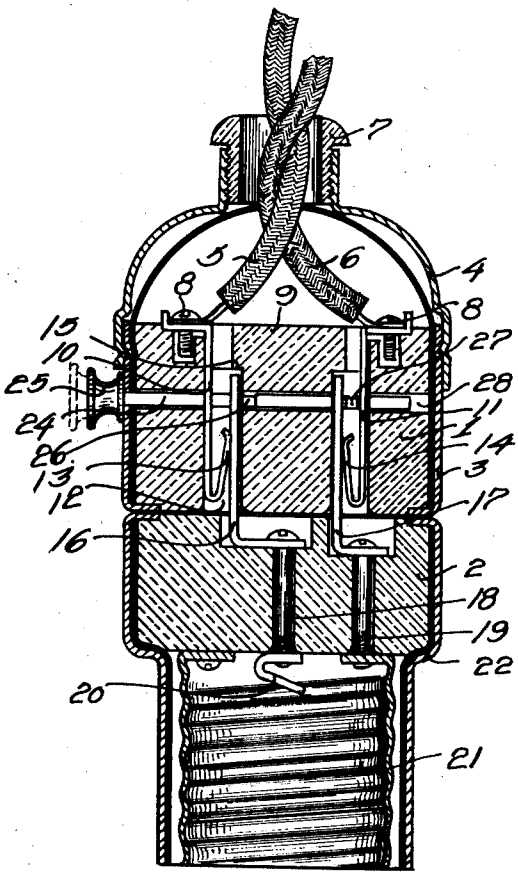

Fig. 2

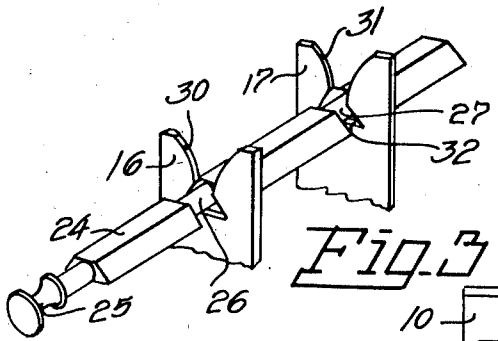

Fig. 3

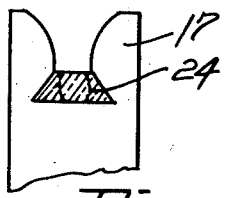

Fig. 4

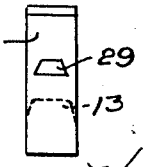

Fig. 5.

Inventor

Amos C. Thompson

By Herbert E. Smith

Attorney

Patented Nov. 17, 1925. 1,561,495

UNITED STATES PATENT OFFICE.

AMOS CECIL THOMPSON, OF SPOKANE, WASHINGTON.

ELECTRICAL CONNECTER.

Application filed November 1, 1924. Serial No. 747,215.

To all whom it may concern:

Be it known that I, AMOS C. THOMPSON, a citizen of the United States, residing at Spokane, in Spokane County, and State of Washington, have invented certain new and useful Improvements in Electrical Connecters, of which the following is a specification.

My present invention relates to improvements in electrical connecters of the quick, detachable, two-part plug type having means for locking the parts together. The invention contemplates a device of this character which is readily interchangeable for selective use with either an illuminating device as an electric lamp, or a heating device, as an electric iron. By means of the device of my invention I provide a fixture that is composed of a minimum number of parts, which may be manipulated with facility and convenience, and which may be manufactured at a comparatively low cost.

The invention consists in certain novel features of construction and combinations and arrangements of parts involving the fixture and locking means for its separable parts as will hereinafter be more specifically referred to and pointed out in my appended claims.

In the accompanying drawings I have illustrated one complete example of the physical embodiment of my invention wherein the parts are combined and arranged in accordance with the best mode I have thus far devised for the practical application of the principles of my invention.

Figure 1 is a view in side elevation of the device of my invention with an incandescent lamp attached thereto.

Figure 2 is a vertical sectional enlarged detail view of the fixture.

Figure 3 is a perspective view of the locking bolt and its connecting parts. Figure 4 is a detail view illustrating the locking bolt in section and showing its relation to one of the conductor plates of the plug holder.

Figure 5 is a face view of one of the conductor plates.

In carrying out the preferred form of my invention as illustrated in the drawings I utilize a plug holder 1 and separable plug 2 both constructed of insulated material suited for the purpose. The holder 1 is provided with the usual casing 3 and its cap 4, and the circuit wires 5 and 6 are introduced to the holder through a nipple 7 and secured by screws 8 on the upper face 9 of the holder.

These screws are also utilized to retain the pair of angular conductor plates 10 and 11 located in the slots 12 of the holder, and said plates are each fashioned with an integral, folded, resilient tongue or spring contact, as 13 and 14. The slots 12 for the plates are recessed as at 15 for the reception of the angular conductor plates 16 and 17 secured by terminal screws 18 and 19 to the plug 2. These conductor plates as seen in Figure 2 are designed to frictionally engage the spring contacts 13 and 14 respectively for electrical connection when the parts are properly related.

The terminal screws 18 and 19 pass through perforations or apertures provided therefor in the plug, and the screw 18 secures a contact plate 20 at the lower face of the plug and central thereof. The screw 19 is secured for electrical connection to an annular flange of a threaded socket sleeve 21 of the plug, which sleeve is rigidly fixed to the face of the plug.

The plug and socket sleeve are enclosed within a casing 22 which is properly insulated as shown in Figure 2.

By reference to Figure 2 it will be obvious that the plug is adapted for quick attachment to its holder, or for quick detachment therefrom. In attaching the plug to its holder, the conductor plates 16 and 17 are introduced into the lower ends of the slots 12, and then said plates are forced upwardly into frictional contact with the respective springs 13 and 14 of the plates 10 and 11 of the holder, for the purpose of retaining the plug in close relationship with its holder and for making the electrical connection between the conducting parts.

It will be apparent that the plug may be a detachable connecter having wires to an electric heating device, as an iron, or as illustrated in Figure 1 the plug may have attached thereto an incandescent lamp 23. The lamp is screwed into the socket sleeve 21 of the plug in usual manner. By this arrangement of parts the fixture is readily adapted for a variety of selective uses in connection with illuminating or heating devices.

For quick detachment of the lamp in Figure 1, instead of unscrewing the lamp from its socket sleeve, the conductor plates 16 and 17 of the plug may with facility be withdrawn from frictional and electrical

contact with the stationary springs 13 and 14.

In some instances a positive lock between the plug and its holder is desirable to prevent accidental displacement of the connecter. For this purpose I provide a slide bolt 24 which is preferably angular in cross section and fashioned with a handle or knob 25, and a pair of spaced annular grooves or notches to provide reduced portions 26 and 27 of the bolt.

The bolt is carried by the holder and is adapted to slide transversely therein in a diametrically arranged bolt hole or guideway 28, and the plates 10 and 11 are provided with complementary bolt holes 29 (Fig. 5) for the accommodation of the bolt.

The conductor plates 16 and 17 of the plug co-act with the slide bolt of the holder for locking these members together and as a means for accomplishing this end said plates have their free ends bifurcated as at 30 and 31, and each plate, at 32 is provided with an enlarged bolt hole conforming in size and shape to the cross-sectional area of the body of the slide bolt. The bifurcated ends of the plates thus form oppositely disposed retaining latches overhanging the slide bolt, as in Figure 2 to prevent withdrawal of the conductor plates of the plug from the holder.

By pulling the knob as indicated by dotted lines in Figure 2 the slide bolt is brought to position in Figure 3 where the reduced portions 26 and 27 of the bolt are located between the pairs of bifurcated ends of the conductor plates. In this position the bolt is free of the overhanging latches of the bifurcated ends, and the plates may be withdrawn from the bolt and from the holder.

From the above description taken in connection with my drawings it will be apparent that I have provided a device of this character which fulfills the objects heretofore set forth, and which performs its required functions with reliability, facility, and accuracy. Various changes and modifications may be made in the exemplified structure, within the spirit and scope of my claims without departing from the principles of my invention.

Having thus fully described my invention, what I claim as new and desire to secure by Letters Patent is:—

1. A holder having a transverse bolt hole and perpendicular spaced slots and contact plates in said slots, a plug having spaced contact plates, said plug plates having bifurcated free ends and bolt holes, and a slide bolt in the holder adapted to engage said bifurcated ends.

2. The combination with a holder having a pair of spaced conductor plates and contact springs thereon, of a plug having a pair of conductor plates each provided with bifurcated free ends and a bolt hole to form retaining latches, said holder having a transversely extending bolt-hole, and a slide bolt in said bolt hole for co-action with the free ends of the plug plates.

In testimony whereof I affix my signature.

AMOS CECIL THOMPSON.