(No Model.) 2 Sheets—Sheet 1.

F. BERNER, Jr.

EMBOSSING MACHINE.

No. 456,079. Patented July 14, 1891.

FIG. 1.

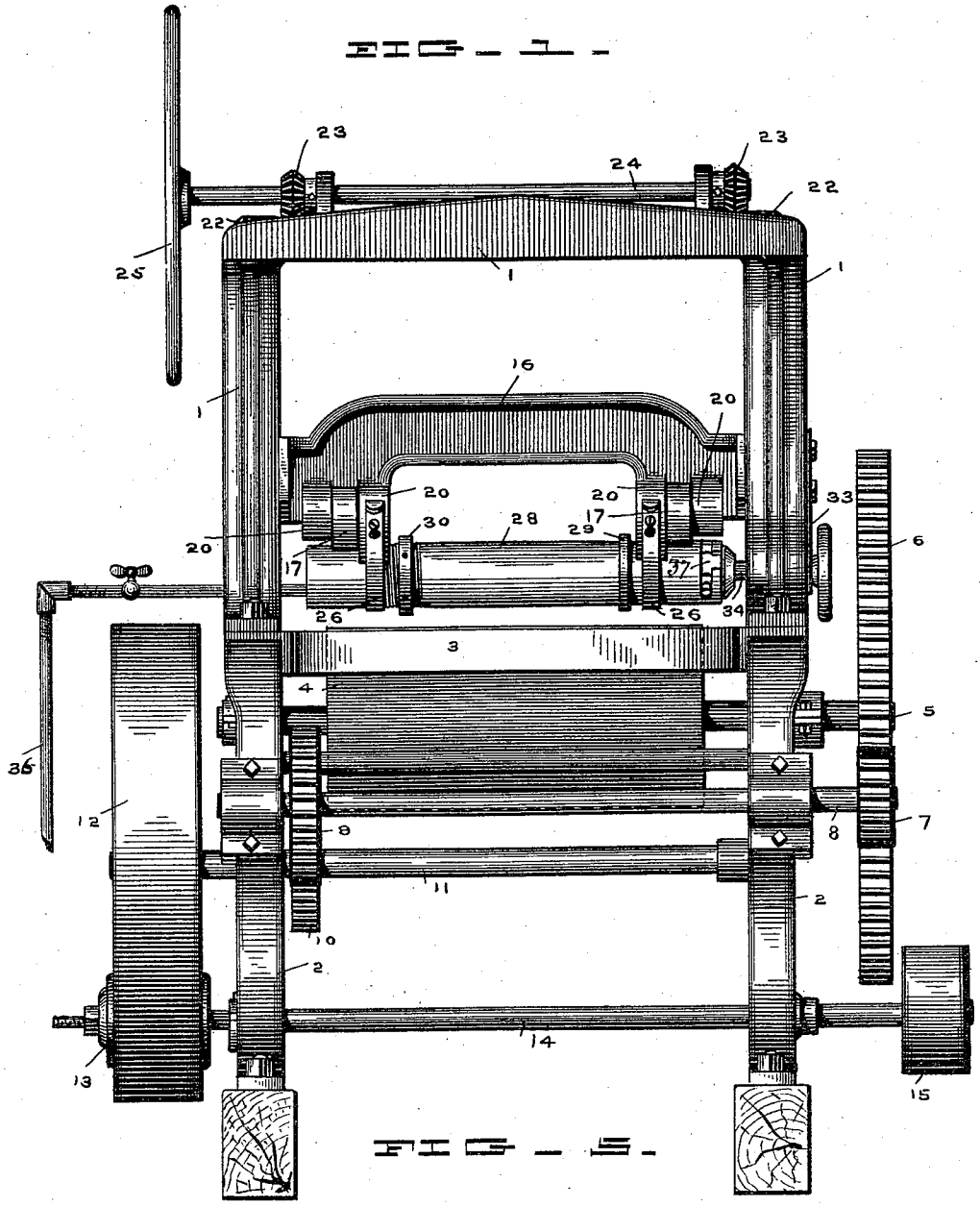

FIG. 5.

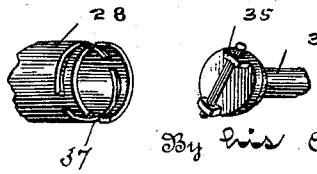

Witnesses

H. D. Neal

O. B. Griffith.

Inventor

Frederick Berner Jr.

By his Attorney

C. E. Jacobs.

THE NORRIS PETERS CO., PHOTO-LITHO., WASHINGTON, D. C.

(No Model.) 2 Sheets—Sheet 2.

F. BERNER, Jr.

EMBOSSING MACHINE.

No. 456,079. Patented July 14, 1891.

FIG. 2.

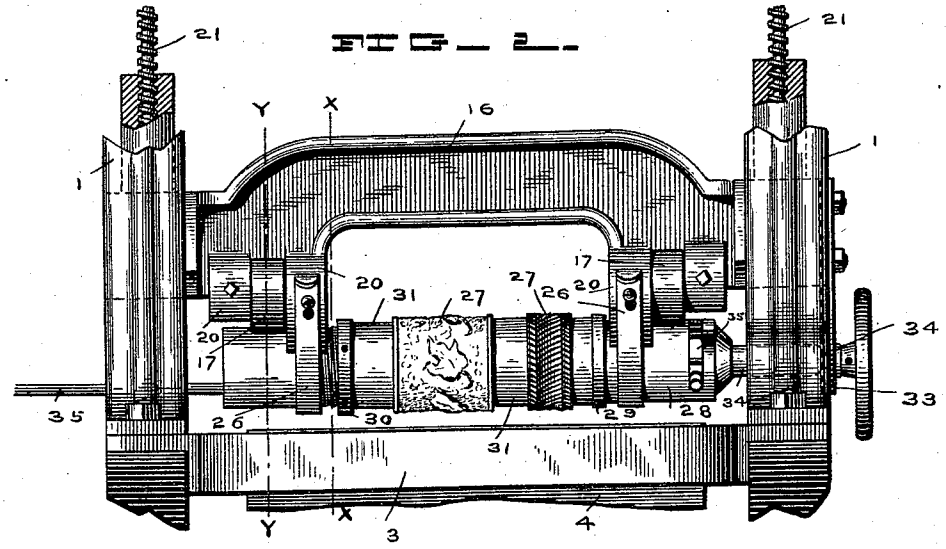

FIG. 3.

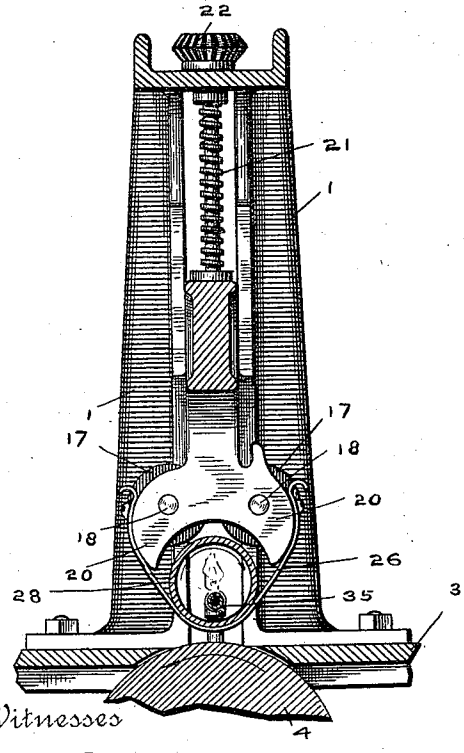

FIG. 4.

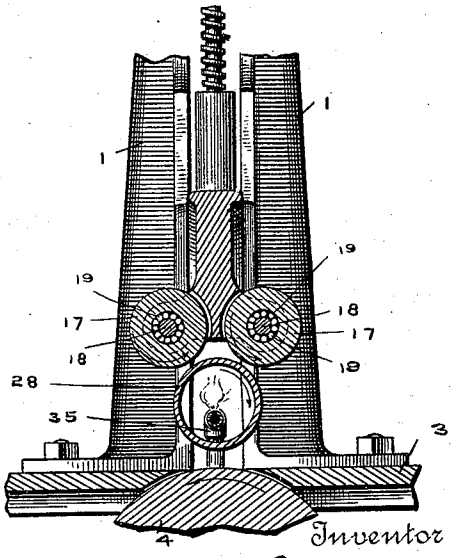

Witnesses

H. D. Healy

C. B. Griffith

Inventor

Frederick Berner Jr.

By his Attorney

C. F. Jacobs.

THE NORRIS PETERS CO., PHOTO-LITHO., WASHINGTON, D. C.

UNITED STATES PATENT OFFICE.

FREDERICK BERNER, JR., OF INDIANAPOLIS, INDIANA, ASSIGNOR TO THE ART EMBOSSING MACHINE COMPANY, OF SAME PLACE.

EMBOSSING-MACHINE.

SPECIFICATION forming part of Letters Patent No. 456,079, dated July 14, 1891.

Application filed February 18, 1891. Serial No. 381,994. (No model.)

To all whom it may concern:

Be it known that I, FREDERICK BERNER, Jr., of Indianapolis, county of Marion, and State of Indiana, have invented certain new and useful Improvements in Embossing-Machines; and I do hereby declare that the following is a full, clear, and exact description thereof, reference being had to the accompanying drawings, in which like figures refer to like parts.

My invention relates to the construction of wood-embossing machines, and will be understood from the following description.

In the drawings, Figure 1 is an end elevation of an embossing-machine with my improvements thereon. Fig. 2 is an enlarged elevation of the upper end of the machine, showing the embossing-dies set in position upon the roll. Fig. 3 is a sectional view on the line *x x*, Fig. 2, looking to the left. Fig. 4 is a similar view on the line *y y*, Fig. 2. Fig. 5 is a perspective view of the right-hand end of the roll, showing the notches and the inner end of the chuck with its pin that engages with such notches.

In detail, 1 is the upper part of the frame-work, and 2 the lower, 3 being the platen or table.

4 is the feed-roll located beneath the table, its upper surface passing through the same. This feed-roll is mounted on a shaft 5, having bearings in the sides of the lower frame-work 2. On its outer end is mounted a gear-wheel 6, engaging with a pinion 7, mounted on the shaft 8, also having bearings in the lower frame, and near the opposite end of this shaft is a pinion 9, engaging with a pinion 10, mounted on a shaft 11, which carries on its outer end the fly-wheel 12, the latter being driven by the friction-roll 13, mounted on the shaft 14, on the outer end of which is mounted a driving-pulley 15. Power being applied to this pulley drives the friction-roll and through it the fly-wheel, and the power thus acquired is transmitted through the pinions to the feed-roll.

In the upper part of the frame-work 1 and adapted to slide therein is a central cross-head 16, having on either side projections 20, which provide bearings for the spindles 18 of the friction-wheels 17, which are mounted thereon and bearing on anti-friction rolls 19, which surround the spindles, as shown in Fig. 4.

21 are screw-rods working loosely in projections on the upper side of this cross-head, these screw-rods supported in the upper frame-work 1, and have on their upper ends the beveled gears 22, which engage with similar gears 23 on the cross-rod 24, which has bearings on the top of the frame-work 1. At one end of the rod 24 is a hand-wheel 25 for turning the same, which either raises or lowers the cross-head and regulates the pressure of the embossing-dies.

Removably attached to one of the boxings 20 are metal straps 26, which support a hollow metal roll 28, upon which the embossing-dies 27 are mounted.

29 is a collar formed integral with this roll, and 30 is a removable collar working on a screw-threaded portion of the roll, between which and the stationary collar 29 the embossing-dies 27 are mounted, together with the spacing-rings 31, which being of different width the dies can be set at any desired position and locked by the collar 30.

33 is a downwardly-projecting bracket attached to one side of the cross-head 16, through the lower end of which passes the spindle 34, carrying a clutch or locking-head 35 on its inner end, which is adapted to enter and engage with notches 37 in the end of the roll 28. This spindle is used for turning the roll when hot to any desired position for starting and having a stationary bearing in the bracket 33, which when locked to the die-roll 28 will prevent any lateral movement of the same and also dispenses with the use of bearing-rings on such roll, which, as before stated, is only sustained by the strips 26; but when a board or any other article that is to be embossed is passed between it and the feed-roll 4 the embossing-roll is forced upward in contact with the friction-wheels 17, against which it bears and is revolved until the work is finished.

36 is a pipe which supplies gas or oil to feed a flame within the die-roll 28 and heat the same.

By removing the dies 27 and rings 31 and putting on a brass roll when heated it may be used for a burnisher either before or after embossing.

It is obvious that the devices herein shown and described for mounting and suspending the embossing-roll, preventing its lateral movement, the arrangement of the friction-wheels with anti-friction bearings in a movable cross-head and bringing them in contact with the embossing-roll when the latter is forced upward by contact with the wood, and the means for adjusting the pressure of the dies upon the material are as well adapted to a solid as to a hollow roll, and I do not intend to limit myself to their use upon either kind of roll separately.

What I claim as my invention, and desire to secure by Letters Patent, is the following:

1. In a wood-embossing machine, a hollow roll, circular dies removably mounted thereon, a burner inside such roll connected to a pipe leading to the fuel-supply, one end of such roll carried by a clutch connected to a spindle having bearings in a bracket or support on a movable cross-head in the frame, and straps for suspending such roll near the opposite end and intermediate between it and the bearing of the spindle, such straps detachably connected to the cross-head, all combined substantially as shown and described.

2. In a wood-embossing machine, a hollow embossing-roll supported at one end by a spindle having bearings in a cross-head movable vertically in the frame-work, such embossing-roll further supported by straps detachably connected to such cross-head, friction-wheels forming bearings for the embossing-roll journaled in such cross-head, and means, such as screw-rods, connected to the cross-head and through pinions to a horizontal counter-shaft having a hand-wheel for adjusting the pressure of the embossing-dies upon the wood, in combination with a heating-burner located inside the roll and a feed-roll carried in the frame below the embossing-roll, substantially as shown and described.

3. In a wood-embossing machine, a frame-work, an adjustable cross-head movable vertically therein, an embossing-roll suspended from such cross-head and detachably locked at one end to a spindle having bearings connected to such cross-head, and friction-wheels journaled in such cross-head on anti-friction bearings above such embossing-roll and adapted to contact therewith and form bearings for such roll when the latter is forced upward by contact of the dies with the wood to be embossed, in combination with a feeding-roll carried below the embossing-roll in the frame-work, substantially as shown and described.

4. In a wood-embossing machine, a frame-work, a feed-roll having bearings therein, mechanism for driving the feed-roll, a cross-head movable vertically in the uprights of the frame above the table, a hollow embossing-roll heated from within, dies removably mounted thereon, such roll suspended by straps from a vertically-moving cross-head and detachably connected at one end to a spindle having bearings in such cross-head, whereby the lateral movement of the roll is prevented, and friction-wheels journaled in bearings upon the cross-head above the embossing-roll and having anti-friction bearings adapted to contact with the periphery of such roll when the latter is forced upward by its operation upon the wood, with means for raising and lowering the cross-head and its connected parts for regulating the pressure of the dies upon the material, all combined substantially as shown and described.

In witness whereof I have hereunto set my hand this 12th day of February, 1891.

FRED BERNER, JR.

Witnesses:
E. B. GRIFFITH,
C. P. JACOBS.