(19) Europäisches Patentamt
European Patent Office
Office européen des brevets

(11) EP 1 011 222 A3

(12) EUROPEAN PATENT APPLICATION

(88) Date of publication A3:
01.10.2003 Bulletin 2003/40

(43) Date of publication A2:
21.06.2000 Bulletin 2000/25

(21) Application number: **99304647.3**

(22) Date of filing: **15.06.1999**

(51) Int Cl.[7]: **H04L 9/08**

(84) Designated Contracting States:
AT BE CH CY DE DK ES FI FR GB GR IE IT LI LU MC NL PT SE
Designated Extension States:
AL LT LV MK RO SI

(30) Priority: **18.12.1998 JP 36034598**

(71) Applicant: **FUJITSU LIMITED**
Kawasaki-shi, Kanagawa 211-8588 (JP)

(72) Inventors:
- **Kamada, Jun**
  Nakahara-ku, Kawasaki-shi, Kanagawa 211 (JP)
- **Noda, Bintatsu**
  Nakahara-ku, Kawasaki-shi, Kanagawa 211 (JP)
- **Ono, Etsuo**
  Nakahara-ku, Kawasaki-shi, Kanagawa 211 (JP)
- **Kuroda, Yasutsugu**
  Nakahara-ku, Kawasaki-shi, Kanagawa 211 (JP)
- **Iwase, Shoko**
  Sunnyvale, CA 94086 (US)

(74) Representative: **Fenlon, Christine Lesley et al**
Haseltine Lake & Co.,
Imperial House,
15-19 Kingsway
London WC2B 6UD (GB)

(54) Electronic data storage apparatus with key management function and electronic data storage method

(57) A storage apparatus includes a key management unit (12) for managing an individual key unique to the apparatus and a common key shared with other storage apparatuses, and an encryption unit (13) for performing an encrypting process or verifying data for performing the encrypting process on electronic data stored in the apparatus to which the unit belongs using the individual key, and performing the encrypting process or verifying the data on the electronic data transmitted to or received from another apparatus using the common key. Thus, the apparatus communicates data using an applicable common key in a local environment and a global environment, appropriately manages a key in each environment, and guarantees the security of the electronic data.

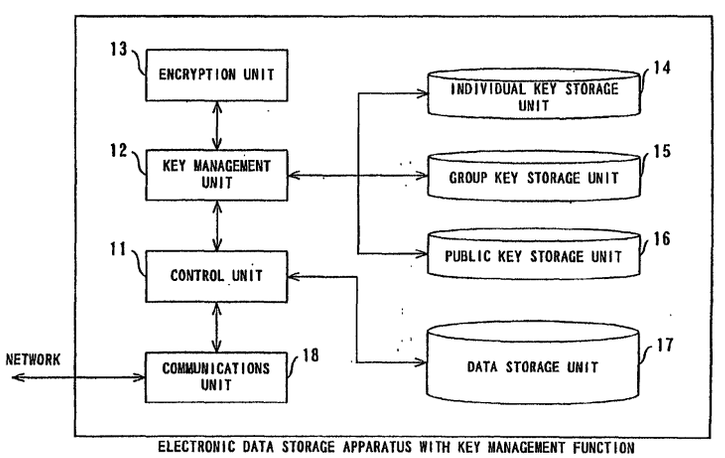

FIG. 2

EP 1 011 222 A3

European Patent Office

EUROPEAN SEARCH REPORT

Application Number
EP 99 30 4647

DOCUMENTS CONSIDERED TO BE RELEVANT

Category	Citation of document with indication, where appropriate, of relevant passages	Relevant to claim	CLASSIFICATION OF THE APPLICATION (Int.Cl.7)
X	ADAMOUSKI F J: "Encryption technology other than PKI" SECURITY TECHNOLOGY, 1998. PROCEEDINGS., 32ND ANNUAL 1998 INTERNATIONAL CARNAHAN CONFERENCE ON ALEXANDRIA, VA, USA 12-14 OCT. 1998, NEW YORK, NY, USA,IEEE, US, 12 October 1998 (1998-10-12), pages 108-116, XP010309584 ISBN: 0-7803-4535-5 * page 111, paragraph 2.2.1 * * page 112, left-hand column - page 113, right-hand column, paragraph 2 * * page 113, right-hand column, paragraph 2.6 - page 114, left-hand column, line 17 * * page 114, right-hand column - page 115, left-hand column, paragraph 3 *	1-14, 17-23	H04L9/08
A	---	15,16	
X	MITTRA S: "IOLUS: A FRAMEWORK FOR SCALABLE SECURE MULTICASTING" COMPUTER COMMUNICATIONS REVIEW, ASSOCIATION FOR COMPUTING MACHINERY. NEW YORK, US, vol. 27, no. 4, 14 September 1997 (1997-09-14), pages 1-12, XP002931671 ISSN: 0146-4833 * page 4 - page 8 * * page 11 *	15,16	TECHNICAL FIELDS SEARCHED (Int.Cl.7) H04L
A	--- -/--	1-14, 17-23	

The present search report has been drawn up for all claims

Place of search	Date of completion of the search	Examiner
BERLIN	1 August 2003	Carnerero Álvaro, F

CATEGORY OF CITED DOCUMENTS

X : particularly relevant if taken alone
Y : particularly relevant if combined with another document of the same category
A : technological background
O : non-written disclosure
P : intermediate document

T : theory or principle underlying the invention
E : earlier patent document, but published on, or after the filing date
D : document cited in the application
L : document cited for other reasons

& : member of the same patent family, corresponding document

EPO FORM 1503 03.82 (P04C01)

European Patent Office

EUROPEAN SEARCH REPORT

Application Number
EP 99 30 4647

DOCUMENTS CONSIDERED TO BE RELEVANT

Category	Citation of document with indication, where appropriate, of relevant passages	Relevant to claim	CLASSIFICATION OF THE APPLICATION (Int.Cl.7)
A	MENEZES, OORSCHOT, VANSTONE: "Handbook of applied cryptography" HANDBOOK OF APPLIED CRYPTOGRAPHY, CRC PRESS SERIES ON DISCRETE MATHEMATICS AND ITS APPLICATIONS, CRC PRESS , 1997, pages 568, 570-572, XP002249713 BOCA RATON, FL, US ISBN: 0-8493-8523-7 * page 568, paragraph 13.5.2.I - paragraph 13.33 * * page 570, paragraph 13.6 - page 572, paragraph 13.40 * ---	1-23	
A	EP 0 715 241 A (MITSUBISHI CORP) 5 June 1996 (1996-06-05) * abstract * -----	1-23	
			TECHNICAL FIELDS SEARCHED (Int.Cl.7)

The present search report has been drawn up for all claims

Place of search	Date of completion of the search	Examiner
BERLIN	1 August 2003	Carnerero Álvaro, F

CATEGORY OF CITED DOCUMENTS

X : particularly relevant if taken alone
Y : particularly relevant if combined with another document of the same category
A : technological background
O : non-written disclosure
P : intermediate document

T : theory or principle underlying the invention
E : earlier patent document, but published on, or after the filing date
D : document cited in the application
L : document cited for other reasons

& : member of the same patent family, corresponding document

EPO FORM 1503 03.82 (P04C01)

ANNEX TO THE EUROPEAN SEARCH REPORT ON EUROPEAN PATENT APPLICATION NO. EP 99 30 4647

This annex lists the patent family members relating to the patent documents cited in the above-mentioned European search report. The members are as contained in the European Patent Office EDP file on
The European Patent Office is in no way liable for these particulars which are merely given for the purpose of information.

01-08-2003

Patent document cited in search report	Publication date	Patent family member(s)	Publication date
EP 0715241 A	05-06-1996	EP 0715241 A2	05-06-1996
		JP 8287014 A	01-11-1996
		US 2002052850 A1	02-05-2002
		US 2002112173 A1	15-08-2002
		US 6408390 B1	18-06-2002
		US 2001013021 A1	09-08-2001
		US 5867579 A	02-02-1999
		US 6424715 B1	23-07-2002
		US 6128605 A	03-10-2000
		US 2002059238 A1	16-05-2002

EPO FORM P0459

For more details about this annex : see Official Journal of the European Patent Office, No. 12/82