Aug. 11, 1959 D. N. WADLOW 2,898,853

OFFSET LITHOGRAPHIC PRINTING MACHINES

Filed Jan. 29, 1958 2 Sheets-Sheet 1

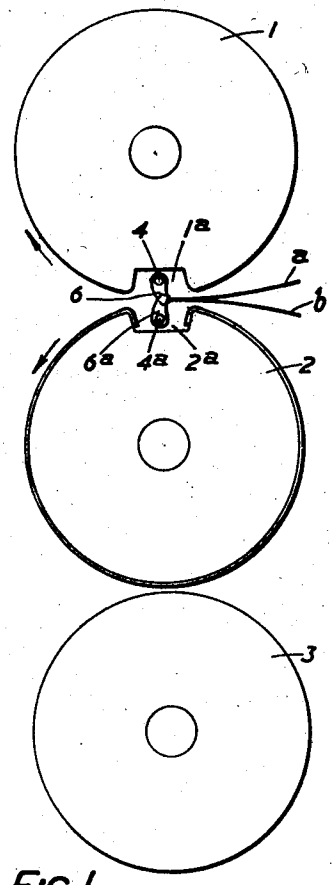

FIG. 1.

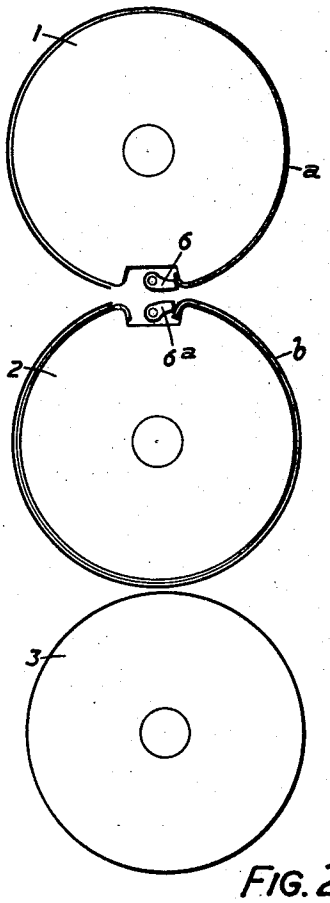

FIG. 2.

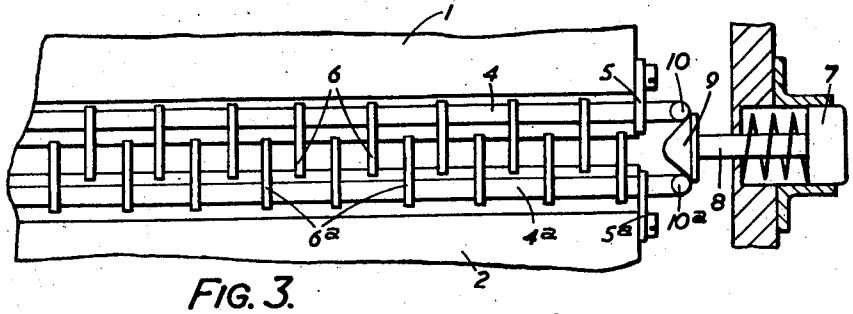

FIG. 3.

DEREK N. WADLOW
Inventor

Holcombe, Wetherill & Brisebois
Attorneys

Aug. 11, 1959 D. N. WADLOW 2,898,853

OFFSET LITHOGRAPHIC PRINTING MACHINES

Filed Jan. 29, 1958 2 Sheets-Sheet 2

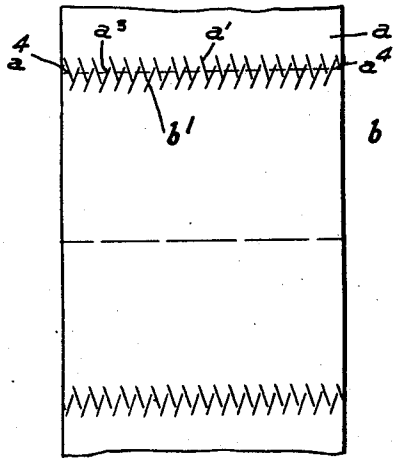

FIG. 4.

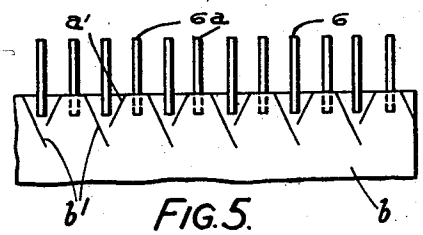

FIG. 5.

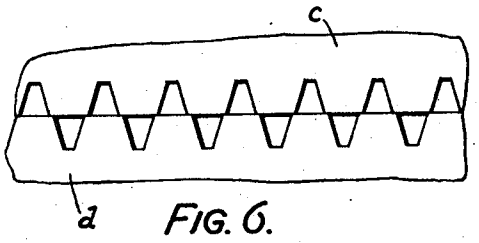

FIG. 6.

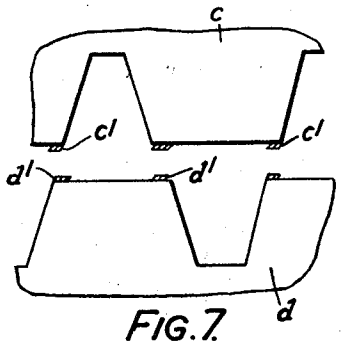

FIG. 7.

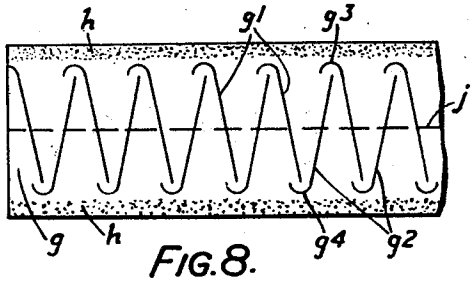

FIG. 8.

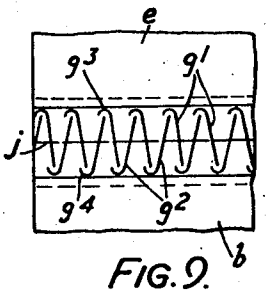

FIG. 9.

DEREK N. WADLOW

Inventor

Holcombe, Wetherill & Brisebois

Attorneys

United States Patent Office 2,898,853 Patented Aug. 11, 1959

2,898,853

OFFSET LITHOGRAPHIC PRINTING MACHINES

Derek Norton Wadlow, Neasden, London, England, assignor to Rotaprint Limited, London, England, a British company

Application January 29, 1958, Serial No. 711,899
Claims priority, application Great Britain May 23, 1957
12 Claims. (Cl. 101—217)

This invention relates to offset lithographic printing machines and to an improved form of blanket and plate for use with such machines.

Normally an offset lithographic printing machine includes a blanket cylinder having a fixed blanket usually made of rubber and after each printing run it is necessary to clean the blanket, for example by wiping it with rag soaked in a suitable solvent until all trace of the inked image is removed so that the blanket is completely clean and ready to receive the image from the printing plate to be used in the next printing run. In the case of long runs where hundreds or thousands of copies are printed, the time spent in cleaning the blanket is relatively negligible compared with the printing time, but for short runs it will be found that the time taken in cleaning the blanket will often exceed the time taken to effect the printing operation.

In recent years offset lithographic printing machines are being used increasingly for printing small numbers of copies, for example ten to twenty copies of invoices, delivery notes, custom declarations, etc., and in this case of work the operator would probably spend several hours in the course of a day merely cleaning the blanket. This is naturally very wasteful not only in time but in cleaning materials which are relatively expensive, and further there is the attendant risk to the health of the operator due to inhaling the fumes given off by the cleaning solvent.

It is an object of the present invention to provide an improved form of blanket which will be serviceable for making short printing runs and enable the above mentioned drawbacks to be avoided.

It is a further object of the invention to provide a unit comprising a blanket and printing plate for use in short printing runs which will enable the time required to make such runs to be greatly reduced thereby increasing the efficiency of the machine and decreasing the cost of its operation.

According to the present invention for use in making short printing runs a disposable blanket and plate are used comprising a pair of superposed sheets of suitable material, each having a series of fingers or the like at the leading end which are disposed in staggered form, one of the said sheets being adapted to serve as a plate or master and the other as a temporary blanket. The leading ends of the superposed sheets are presented to the nip between the plate and blanket cylinders of the machine which are provided with grippers for engaging the fingers or the like referred to so as to clamp the sheets to the respective cylinders.

The superposed sheets are preferably connected to one another at their leading ends in such a manner that they are automatically separated by a relatively light pull being exerted on them. For example, a transversely extending line of oblique cuts may be formed in the sheets adjacent to the leading ends, the cuts in one line extending at an angle to those in the other so as to leave a small uncut area between the two lines of cuts. A light pull will accordingly tear through this uncut area to separate the sheets which will then have a series of transversely spaced projecting fingers clamped to the respective cylinders by the said grippers.

To enable the invention to be fully understood it will now be described with reference to the accompanying drawings, in which:

Figs. 1 and 2 are diagrammatic views of the cylinders of a rotary offset lithographic printing machine, Fig. 1 illustrating the first stage in attaching the disposable blanket and plate to the respective cylinders, and Fig. 2 showing the blanket and plate attached;

Fig. 3 is a view on an enlarged scale of the means for gripping the blanket and plate;

Fig. 4 is a view illustrating a web of paper or like material from which the blanket and plate are formed according to one embodiment of the invention;

Fig. 5 is a diagrammatic view illustrating the method of clamping the blanket and plate to the cylinders;

Figs. 6 and 7 are fragmentary views illustrating a modified form of blanket and plate;

Figs. 8 and 9 are fragmentary views illustrating a further modification of the invention.

As shown in Figs. 1 and 2 of the accompanying drawings **1** represents the plate cylinder, **2** the blanket or offset cylinder and **3** the counter-pressure cylinder. The plate and blanket cylinders are each formed with a recess **1***a*, **2***a* in each of which is mounted a transverse rod **4**, **4***a* the ends of which are rotatably mounted in brackets **5**, **5***a* (it will be understood that a bracket will be provided at each end of the said cylinder).

The rod **4** carries a series of spaced grippers **6**, and the rod **4***a* a series of similar grippers **6***a*, the sets of grippers being alternately arranged with one another. The purpose and operation of the grippers is to clamp sheets which are adapted to serve as a plate and blanket in the printing operation.

For use in effecting short printing runs a disposable blanket and plate is used comprising a unit in the form of two superposed sheets *a*, *b* preferably attached to one another at their leading ends, but unattached at their trailer ends. According to one embodiment the sheets are formed from a web of suitable material which is divided into connected sheet lengths by two lines of angularly disposed cuts a^1, b^1 (Fig. 4). It will be noted that the lines of cuts extend obliquely at an acute angle to one another, the cuts b^1 stopping short of the cuts a^1, so as to leave a small uncut area a^3. It will be understood that the web is formed of paper or other material of such quality and other characteristics that it will serve as an efficient plate and blanket.

In use, a length equivalent to two sheet lengths is removed from the web shown in Fig. 4, the sheet lengths, however, remain connected to one another. One of the sheet lengths, for example *a* is adapted to form the printing plate and the necessary data is imprinted thereon, for example by means of a typewriter. After the typing operation has been completed the two sheet lengths are folded about the line a^4 into overlapping relation, the surfaces of the sheet which are adapted to form the plate and blanket faces being disposed inwardly. The unit comprising the plate and blanket sheets is then fed into the nip between the plate and blanket cylinders **1**, **2** (Fig. 1) so that the leading end of each sheet is disposed adjacent to the sets of grippers.

The grippers are normally urged into the position shown in Fig. 2 by spring means (not shown), but in the position indicated in Fig. 1 they have been moved into the open or inoperative position by the push button **7** (Fig. 3) the stem **8** of which carries a cone **9** adapted to engage crank shaped portions **10**, **10***a* formed integrally with the rods **4**, **4***a* so that inward movement of the button **7** will effect the rotation of the rods to open the grippers.

When the unit comprising the plate and blanket sheets is positioned as indicated in Fig. 1 the leading ends of the sheets will be disposed between the free ends of the

sets of grippers **6**, **6***a*, and as indicated in Fig. 5, the grippers **6** will register with the projecting fingers of the sheet *a* disposed between the adjacent cuts and the grippers **6***a* will register with the projecting fingers of the sheet *b* disposed between the adjacent cuts, the said fingers of the two sheets being connected solely by the small uncut areas a^3. When the push button **7** is released the grippers **6**, **6***a* will be urged by the spring means (not shown) towards the position indicated in Fig. 2. The cylinders **1**, **2** are then slowly rotated in their normal direction of rotation, as indicated by the arrows, and as the fingers of the respective sheets are engaged by the grippers, the rotation of the cylinders will cause the sheets to be torn through the uncut areas a^3 so that the sheets will be separated. The grippers will then press the fingers of the respective sheets into the recesses **1***a*, **2***a* and clamp them against the inner wall thereof as shown in Fig. 2.

During the continued slow rotation the cylinder will cause the sheets *a*, *b* to be pressed into engagement with the cylindrical surfaces of the cylinders and it will be noted (Fig. 2) that the sheets are secured to the cylinders only at their leading end which is usually sufficient for effecting short runs. If desired, however, the sheets may be secured to the cylinder at other points, for example, the sheets or the cylinders may be provided with spots of adhesive so that the sheets will be temporarily stuck to the cylinders as they are pressed into engagement when the cylinders are rotated.

The plate sheet *a* is then "fixed" or desensitized in the known manner and the machine is now ready for a printing run. After this has been completed the plate and blanket sheets are removed and fresh ones attached in the manner previously described. The blanket sheet will be thrown away but the sheet which forms the plate may be stored for further use at some future time. The plate and blanket sheets are attachbale to the cylinders in a very easy and rapid manner and as the ink image is offset on to the disposable blanket *b*, the blanket cylinder proper will not be contaminated but will remain clean and ink free and there is accordingly no need for it to be cleaned after each printing run.

According to a modification illustrated in Fig. 6 and Fig. 7 the sheets which form the plate and blanket comprise separately formed sheets *c*, *d*. Their leading ends are cut to provide a castellated form as shown and the sheets are temporarily secured by providing spots of glue c^1, d^1 on the edges of the castellations. Book binding glue or other similar glue having flexible characteristics is used so that the sheets can be folded into superposed relation in the manner previously described with reference to the first embodiment. The sheet which is to form the plate is typed and the two sheets are then folded into superposed relation and attached to the printing and blanket cylinders and the machine substantially as described with reference to the first embodiment of the invention. In this case, however, the sheets are separated not by tearing but by breaking the glue joint.

According to a further modification as illustrated in Figs. 8 and 9, instead of the leading ends of the sheets being formed with cuts, etc., they are plain and adapted to be connected by a transverse tape which is formed with lines of cuts. As shown in Fig. 9 the plate sheet *e* and blanket sheet *f* have straight uncut leading ends and are secured as by adhesive to the opposite edges of a transversely extending tape *g* which is formed of paper or other suitable material. The tape has two lines of cuts g^1, g^2 extending obliquely at an acute angle to one another, the ends of the cuts having arc shaped portions g^3, g^4 which overlap the adjacent straight ends of the adjacent cuts. Along each opposite edge the tape is provided with a coating of adhesive *h*. The tape is secured to the adjacent leading ends of the sheets *e*, *f* and is adapted to be folded about a preformed fold line *j* to enable the sheets to be disposed in overlapping relation when they are to be attached to the cylinders **1**, **2** in a manner as previously described. The purpose of the arcuate portions g^3, g^4 is to ensure that when the sheets are separated the tear line will be confined by the arcuate portion.

The plate and blanket sheets may be made of any suitable material. Paper printing plates are known consisting of coated or treated paper and it has been found that such sheets are also satisfactory for use as a temporary blanket in accordance with the present invention. The web illustrated in Fig. 4 may be formed of such paper.

It may, however, sometimes be desirable to use material for the plate which is not particularly satisfactory for use as a blanket or to make the plate of relatively expensive material but make the blanket of cheaper material. In this case the separate sheets forming the plate and blanket will be attached at their leading ends according to the embodiment illustrated in Figs. 6 and 7 or 8 and 9.

It will be understood that the arrangement or disposition of the lines of cuts may be varied. The arrangement illustrated in Fig. 4 is particularly applicable for use with paper in which the direction of the tear is designed to occur parallel to the fibres of the paper. The arrangement illustrated in Fig. 8 is particularly applicable where the direction of tear lies across the fibres of the paper or with materials such as plastic film where there is no tendencies to tear in any particular direction.

While it is preferred that the blanket and plate sheets be temporarily attached to one another at their leading ends prior to being positioned for attachment to the cylinders **1**, **2**, they need not necessarily be attached. For example, the leading ends of the respective sheets may be formed with alternately arranged integral fingers and the sheets when superposed being so arranged that the fingers of the respective sheets will be automatically gripped by the grippers **6**, **6***a*.

After each printing operation, the normal practice will be to remove and throw away both the plate and blanket but if necessary the plate sheet may be stored for future use, in which case when it is re-used a new blanket sheet will be married up with the plate sheet as described in the preceding paragraph so that two sheets form a unit for attachment to the cylinders **1**, **2** of the machine as previously described.

Among materials found to be suitable as separate blanket sheets are cast coated paper, enamel or chrome enamel coated paper, brush coated art, process coated arts, machine coated arts, imitation arts. Good results may also be obtained from papers selected from the following: pure supercalender printings, smooth offset papers, smooth litho papers, vellum and parchment. Other substances which are suitable are sheets of regenerated cellulose, sheets of synthetic plastic such as acetate, polystyrene, polyvinyl chloride, nylon, terylene, etc.

Some of the above materials used as blankets give excellent printing results, but others while not so good will give readable copies and are quite satisfactory for short run printing where only a small number of copies is required, and where provided readable copies are obtained the quality of the printing is not of prior importance. Where the plate and blanket are made from the same parent web of material it has been found that any material suitable for use as a cheap paper master plate has also the requisite qualities for a paper blanket.

When the printing machine is used for normal long runs it will have the normal rubber blanket fitted to the blanket cylinder, but when short runs are to be made this rubber blanket will be removed and a resilient sub-blanket substituted, the thickness of which will be such that when the disposable sheet blanket is attached, the total thickness will equal that of the normal rubber blanket. The sub-blanket can be made of any suitable material which will provide a resilient support for the

disposable blanket and it is not necessary that it be made of material suitable for offset printing as the surface of the sub-blanket is never used for this purpose. Further it is not absolutely necessary that the sub-blanket be resilient and if desired the necessary resilience to effect efficient printing operation may be effected by providing the plate and/or compression cylinder with a resilient layer.

I claim:

1. For use in an offset lithographic printing machine including plate and blanket cylinders each having a series of gripper means the gripper means on one cylinder being staggered with respect to and arranged to be in position at the bight of the cylinders simultaneously with the gripper means on the other cylinder, a pair of sheets connected together at one end in a manner to permit them to be separated by a relatively light pull, each sheet having integral attaching means at the connected end, the said attaching means on one sheet being staggered with respect to the attaching means on the other sheet to enable the attaching means on the respective sheets to be attached to the blanket and plate cylinder of the machine by the gripper means carried by said cylinders, one of said sheets being adapted to serve as a temporary blanket for the blanket cylinder and the other as a plate or master for the plate cylinder.

2. A sheet assembly according to claim 1 wherein the two sheets are formed from a single web of material formed with two rows of oblique cuts extending in a line transversely of the web to divide the web into two sheet portions, the cuts being so formed as to provide staggered attaching fingers integrally connected with the adjacent ends of the sheet portions, small uncut areas being left between the two rows of cuts to enable the sheets to be separated by tearing through said uncut areas.

3. A sheet assembly according to claim 2 wherein the cuts in each row extend obliquely to the longitudinal axis of the sheets, and obliquely to the cuts in the other row in such a manner that the ends of the cuts in one row stop short of intersecting relation to the cuts in the other row so as to leave a small uncut area bounded by cuts in the two rows.

4. A sheet assembly according to claim 1 wherein the sheets are separately formed and are provided at one end with a series of longitudinally extending fingers, the said ends of the sheets being connected together in such a manner that the fingers of one sheet are staggered with respect to the fingers on the other sheet.

5. A sheet assembly according to claim 4 wherein the said ends of the sheet are connected by adhesive of such nature as to provide a flexible bond which will enable the sheets to be folded into overlapping relation about the line of the adhesive joint.

6. A sheet assembly according to claim 1 wherein the sheets are separately formed and are connected together at one end by a transverse strip the opposite transverse edges of which are secured by adhesive to the adjacent ends of the sheets, the said strip being formed with two rows of obliquely disposed cuts defining attaching fingers integral with the respective opposite transverse edge portions of the strip, uncut areas being left between the cuts in the two rows and so arranged that by tearing through said uncut areas the separation of the sheets from one another is effected.

7. A plate and blanket sheet unit for use in an offset lithographic printing machine including plate and blanket cylinders each having a series of gripper means the gripper means on one cylinder being staggered with respect to and arranged to be in position at the bight of the cylinders simultaneously with the gripper means on the other cylinder, said sheet unit comprising two superposed sheets, integral attaching means at the leading end of each sheet, said attaching means on one sheet being staggered with respect to said attaching means on said other sheet to enable one sheet to be attached to the plate cylinder by the gripper means on said cylinder engaging the attaching means of said sheet and the other sheet to be attached to the blanket cylinder by the gripper means on said latter cylinder engaging the attaching means on said other sheet.

8. An offset lithographic printing machine including plate and blanket cylinders, a series of gripper means on both cylinders, the gripper means on one cylinder being staggered with respect to and arranged to be in position at the bight of the cylinders simultaneously with the gripper means on the other cylinder, a disposable sheet of material suitable for receiving and transferring ink wrapped around the blanket cylinder and a sheet of material suitable for use as a printing plate or master sheet wrapped around the plate cylinder, each of the said sheets having attaching means at the leading end, the attaching means of one sheet being staggered with respect to the attaching means on the other sheet, the attaching means of each sheet being gripped by the gripper means of the respective cylinders, the rear ends of the sheets being unsecured to their respective cylinders.

9. A printing machine according to claim 8 having means for simultaneously operating both sets of gripper means when the cylinders are stationary to enable the said sheets to be simultaneously attached to or detached from the respective cylinders.

10. A printing machine according to claim 9 wherein each set of gripper means is carried by a rotatably mounted member, an actuating device connected with said member and operable to move both sets of gripper means simultaneously between sheet clamping and unclamping positions.

11. A method of printing a small number of copies by the use of an offset lithographic printing machine including plate and blanket cylinders each having a series of gripper means the gripper means on one cylinder being staggered with respect to and arranged to be in position at the bight of the cylinders simultaneously with the gripper means on the other cylinder, which includes feeding the leading ends of a pair of superposed sheets to said cylinders, said leading ends having staggered attaching means, one sheet being capable of receiving and transferring ink so as to serve as a blanket surface and the other sheet being capable of serving as a printing plate sheet, operating gripper means on said cylinders to simultaneously clamp the leading end of said first sheet to the blanket cylinder and the leading end of the second mentioned sheet to the plate cylinder, rotating said cylinders to cause the sheets to wrap around the outer surface of the blanket cylinder and plate cylinder respectively, and operating the machine to effect a short printing run.

12. The method according to claim 11 wherein the blanket sheet prior to being attached to the blanket cylinder is connected at its leading end to the plate sheet, the method including rotating the gripper means on said cylinder to simultaneously clamp the leading end of said first sheet to the blanket and the leading end of the second mentioned sheet to the plate cylinder, rotating said cylinders relatively slowly to effect the separation of the connected ends of said sheets, continuing the slow rotation of the cylinders to cause the blanket and plate sheets to be wrapped around the outer surfaces of the blanket cylinder and the plate cylinder respectively and thereafter rotating the cylinders at normal printing speed to effect the desired printing operation.

References Cited in the file of this patent

UNITED STATES PATENTS

1,550,452	Parker	Aug. 18, 1925
2,109,152	Meisel	Feb. 22, 1938
2,421,823	Allen et al.	June 10, 1947
2,563,646	Gruver	Aug. 7, 1951