**(12) STANDARD PATENT** (11) Application No. **AU 2012355490 B2**
**(19) AUSTRALIAN PATENT OFFICE**

(54) Title
**Fuel tank vent valve assembly and method of assembly**

(51) International Patent Classification(s)
***B60K 15/035*** (2006.01) ***F16K 24/00*** (2006.01)

(21) Application No: **2012355490** (22) Date of Filing: **2012.12.17**

(87) WIPO No: **WO13/096190**

(30) Priority Data

| (31) Number | (32) Date | (33) Country |
|---|---|---|
| **13/334,519** | **2011.12.22** | **US** |

(43) Publication Date: **2013.06.27**
(44) Accepted Journal Date: **2015.01.15**

(71) Applicant(s)
**Eaton Corporation**

(72) Inventor(s)
**Pifer, Daniel Lee**

(74) Agent / Attorney
**FB Rice, Level 23 44 Market Street, Sydney, NSW, 2000**

(56) Related Art
**US 5582198**
**EP 1617113**

(12) INTERNATIONAL APPLICATION PUBLISHED UNDER THE PATENT COOPERATION TREATY (PCT)

(19) World Intellectual Property Organization
International Bureau

(43) International Publication Date
27 June 2013 (27.06.2013)

WIPO | PCT

(10) International Publication Number
WO 2013/096190 A1

(51) International Patent Classification:
*B60K 15/035* (2006.01) *F16K 24/00* (2006.01)

(21) International Application Number:
PCT/US2012/070078

(22) International Filing Date:
17 December 2012 (17.12.2012)

(25) Filing Language: English

(26) Publication Language: English

(30) Priority Data:
13/334,519 22 December 2011 (22.12.2011) US

(71) Applicant: **EATON CORPORATION** [US/US]; 1111 Superior Avenue, Cleveland, OH 44114-2584 (US).

(72) Inventor: **PIFER, Daniel, Lee**; 1587 Nathans Trail, Chelsea, MI 48118 (US).

(74) Agent: **QUINN, Christopher, W.**; Quinn Law Group, PLLC, 39555 Orchard Hill Place, Ste 520, Novi, MI 48375 (US).

(81) Designated States *(unless otherwise indicated, for every kind of national protection available)*: AE, AG, AL, AM, AO, AT, AU, AZ, BA, BB, BG, BH, BN, BR, BW, BY, BZ, CA, CH, CL, CN, CO, CR, CU, CZ, DE, DK, DM, DO, DZ, EC, EE, EG, ES, FI, GB, GD, GE, GH, GM, GT, HN, HR, HU, ID, IL, IN, IS, JP, KE, KG, KM, KN, KP, KR, KZ, LA, LC, LK, LR, LS, LT, LU, LY, MA, MD, ME, MG, MK, MN, MW, MX, MY, MZ, NA, NG, NI, NO, NZ, OM, PA, PE, PG, PH, PL, PT, QA, RO, RS, RU, RW, SC, SD, SE, SG, SK, SL, SM, ST, SV, SY, TH, TJ, TM, TN, TR, TT, TZ, UA, UG, US, UZ, VC, VN, ZA, ZM, ZW.

(84) Designated States *(unless otherwise indicated, for every kind of regional protection available)*: ARIPO (BW, GH, GM, KE, LR, LS, MW, MZ, NA, RW, SD, SL, SZ, TZ, UG, ZM, ZW), Eurasian (AM, AZ, BY, KG, KZ, RU, TJ, TM), European (AL, AT, BE, BG, CH, CY, CZ, DE, DK, EE, ES, FI, FR, GB, GR, HR, HU, IE, IS, IT, LT, LU, LV, MC, MK, MT, NL, NO, PL, PT, RO, RS, SE, SI, SK, SM, TR), OAPI (BF, BJ, CF, CG, CI, CM, GA, GN, GQ, GW, ML, MR, NE, SN, TD, TG).

**Published**:

— *with international search report (Art. 21(3))*

(54) **Title**: FUEL TANK VENT VALVE ASSEMBLY AND METHOD OF ASSEMBLY

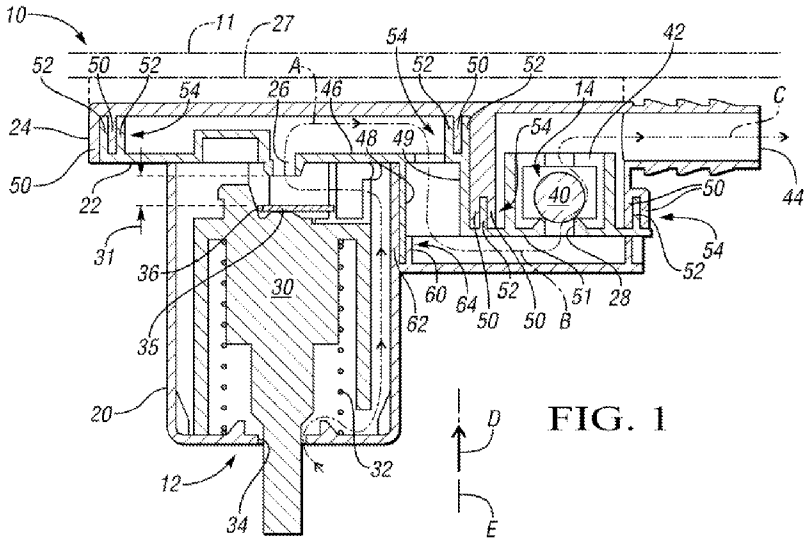


FIG. 1

(57) **Abstract**: A vent valve assembly (10, 110, 210, 310) includes a first housing component (20, 120, 220, 320), a second housing component (22, 122, 222, 322), and a third housing component (24, 124, 224, 324), as well as a first valve (12, 112, 212, 312) and a second valve (14, 114, 214, 314). The first, second, and third housing components are configured to assemble together along one directional axis (E) with the second housing component, the first valve and the second valve between the first and third housing components and with the second valve laterally-spaced from the first valve. The assembled first, second, and third housing components define a nonlinear vapor flow path (A, B, C) that redirects vapor from the first valve to the second valve, thereby reducing an overall height of the vent valve assembly.

WO 2013/096190 A1

2012355490 03 Dec 2014

# FUEL TANK VENT VALVE ASSEMBLY AND METHOD OF ASSEMBLY

## TECHNICAL FIELD

**[0001]** The present teachings generally include a vent valve assembly and a method of assembling a vent valve assembly.

## BACKGROUND

**[0002]** Fuel tank vent valve assemblies are used to regulate the vapor pressure within the fuel tank by allowing the venting of vapors under predetermined conditions. Some vent valve assemblies integrate more than one valve in a common housing. Assembly of vent valve assemblies with multiple valves and housing components can be complex and time-consuming.

**[0002A]** Any discussion of documents, acts, materials, devices, articles or the like which has been included in the present specification is not to be taken as an admission that any or all of these matters form part of the prior art base or were common general knowledge in the field relevant to the present disclosure as it existed before the priority date of each claim of this application.

## SUMMARY

**[0002B]** Throughout this specification the word "comprise", or variations such as "comprises" or "comprising", will be understood to imply the inclusion of a stated element, integer or step, or group of elements, integers or steps, but not the exclusion of any other element, integer or step, or group of elements, integers or steps.

**[0003]** According to a first aspect of the present invention, a vent valve assembly comprising:

a first housing component;

a second housing component;

a third housing component;

a first valve; a second valve;

wherein the first, second, and third housing components are configured to assemble together along one directional axis with the second housing component, the first valve and the second valve between the first and third housing components and with the second valve laterally-spaced from the first valve; and

wherein the assembled first, second, and third housing components define a nonlinear vapor flow path that redirects vapor from the first valve to the second valve the second housing component defining a first opening that functions as a vapor vent of the first valve;

wherein the second housing component defines a second opening that functions as a vapor vent of the second valve; and

wherein vapor flows from the first opening to the second opening.

**[0004]** According to a second aspect of the present invention, a method of assembling a fuel tank vent valve assembly having a first valve and a second valve, comprising:

assembling a first, a second, and a third housing component to one another along one directional axis so that the first valve and the second valve are laterally displaced from one another between the first and third housing components, and the second housing component is between the first and third housing components and configured with a first opening to permit vapor flow from the first valve to the second valve, and

a second opening to permit vapor flow past the second valve;

wherein the first opening is displaced from the second opening along the axis so that vapor flows in one direction along the axis through the first opening, and then flows in an opposing direction along the axis to reach the second opening; and

wherein said assembling includes snapping tabs that extend from one of the first housing component and the third housing component to retainers on the other of the first housing component and the third housing component to retain the first housing component to the third housing component with the second housing component trapped therebetween.

**[0012]** FIGURE 5 is a schematic cross-sectional illustration of a fourth embodiment of a vent valve assembly that has a liquid-vapor discriminating valve and a pressure-holding valve.

DETAILED DESCRIPTION

**[0013]** Referring to the drawings, wherein like reference numbers refer to like components throughout the several views, FIG. 1 shows a vent valve assembly 10 designed to be mounted within a fuel tank 11 to control venting of fuel vapor from the fuel tank. The vent valve assembly 10 includes both a first valve, which in this embodiment is a liquid-vapor discriminating valve (LVDV) 12 and a second valve, which in this embodiment is a pressure-holding valve (PHV) 14. The vent valve assembly 10 is configured for ease of assembly along a single directional axis E with a reduced number of assembly steps. Additionally, the pressure-holding valve 14 is laterally-offset from the LVDV 12. This allows the LVDV 12 to be positioned closer to an upper wall of the fuel tank 11 when the vent valve assembly 10 is mounted within the fuel tank 11, resulting in the LVDV 12 closing at a higher fuel height.

**[0014]** The vent valve assembly 10 includes three housing components: a first housing component 20, a second housing component 22, and a third housing component 24. The first housing component 20 is also referred to as a lower housing component as it is lowest within the fuel tank 11 when the valve assembly 10 is mounted within the tank 11. The third housing component 24 is referred to herein as an upper housing component, as it is highest in the fuel tank 11 when the vent valve assembly 10 is mounted within the fuel tank 11. The second housing component 22 is referred to herein as a middle housing component or midplate, as it is sandwiched and trapped between the upper housing component 24 and the lower housing component 20 when the vent valve assembly 10 is assembled. The third housing component 24 mounts to a tank attachment device 27, which is configured to mount to the fuel tank 11. For example, the tank attachment device 27 can be a component that fits within an opening in the fuel tank 11 to support the vent valve assembly 10 to the upper wall of the fuel tank 11. Alternatively, the tank attachment device 27 can be a component that fuses to the fuel tank 11 when the material of the fuel tank 11 is relatively hot. Still further, the third housing component 24 could be configured to mount directly to the fuel tank 11 by heat fusion, as described with respect to the embodiments of FIGS. 2, 4 or 5. It will be appreciated in light of the disclosure that the first housing

component 20, the second housing component 22, and the third housing component 24 provide ornamental features aside from the functional features described herein.

**[0015]** The middle housing component 22 includes a first opening 26 above the LVDV 12 and a second opening 28 below the PHV 14. The second opening 28 is thus both laterally-spaced and axially-displaced from the first opening 26. The middle housing component 22 establishes a nonlinear flow path between the lower housing component 20 and the upper housing component 24 to direct vapor flow from the LVDV 12 to the PHV 14, thereby allowing the PHV 14 to be laterally-spaced from the LVDV 12 instead of directly above the LVDV 12.

**[0016]** The LVDV 12 includes a float 30 that is spring-biased toward the opening 26 by a spring 32. An opening 34 in the lower housing portion 20 allows vapor to pass through the lower housing portion 20 and through the opening 26. When liquid fuel level in the fuel tank 11 is at a predetermined level, the float 30 rises to block the opening 26. A peel-away device 35 hinged to the float 30 at pivot 36 blocks the opening 26 when the float 30 rises. The float 30 rises a predetermined amount 31 from the lowered position shown to a shutoff position in which the peel-away device 35 is against the middle housing component 22 at the opening 26. Because vapor is not vented, liquid level within the tank 11 can no longer rise and liquid fuel backs up within a fuel pipe to shut off a dispensing nozzle (not shown). If vapor pressure within the fuel tank 11 rises above a predetermined pressure, however, the balance of forces on the peel-away device 35 will cause it to peel away from the opening 26 sufficiently to relieve vapor pressure. Because vapor can be vented in this manner while liquid cannot, the LVDV 12 discriminates between vapor and liquid and is referred to as a liquid-vapor discriminating valve. Vapor then passes from the fuel tank vapor space through opening 34 and first opening 26 along vapor flow path indicated by arrow A. When liquid level within the tank 11 falls so that the float 30 is lowered as shown in FIG.1, vapor also vents along the flow path of arrow A.

**[0017]** The PHV 14 includes a weighted ball 40 positioned within a retainer 42 formed by the middle housing component 22. Gravity causes the ball 40 to block the second opening 28 unless vapor pressure below the opening 28 rises to a predetermined level, at which point the ball 40 lifts, allowing vapor that has flowed along the vapor flow path from the first opening 26 to the second opening 28, as indicated by arrow B, to continue along the vapor flow path, as indicated by arrow C, through a vent valve assembly outlet 44 to a vapor recovery system. The middle

housing portion 22 has a laterally-extending wall portion 46, axial-extending wall portions 48, 49 and laterally-extending wall portion 51 that define a nonlinear flow path from the first opening 26 to the second opening 28, directing vapor flow from the LVDV 12 to the PHV 14.

**[0018]** The upper housing component 24, middle housing component 22 and lower housing component 20 are configured with complementary features allowing them to be assembled to one another in a direction D along a single axis E. That is, the vent valve assembly 10 assembles along a single axis parallel to the direction of extension of the ridges 50, 52. The axis E indicates the direction of assembly only (upward and/or downward along the axis E). Specifically, the upper housing component 24 has ridges 50 that press-fit to ridges 52 of the middle housing component 22 at various locations to form labyrinth seals 54. The ball 40 is placed on the middle housing component 22 within the retainer 42, and then the middle housing component 22 is moved toward the upper housing component 24 in direction D to secure the ridges 50 to the ridges 52. The ridges 50 are appropriately aligned with the ridges 52 when the middle housing component 22 is moved toward the upper housing component 20. Alternatively, the upper housing component 24 may be moved toward the middle housing component 22. It will be appreciated in light of the disclosure that the first housing component 20, the second housing component 22, and the third housing component 24 provide ornamental features including an overall impression aside from the functional features associated with their relative orientation described herein.

**[0019]** Next, the float 30 and spring 32 are supported on the lower housing component 20, and the lower housing component 20 is moved toward the middle housing component 22 in direction D. Alternatively, the middle housing component 22 may be moved downward toward the lower housing component 20 along axis E in a direction opposed to direction D. The lower housing component 20 also has a ridge 60 and a wall portion 62 that press-fits to wall portion 48 of the middle housing component 22 to form a labyrinth seal 64. The ridge 60 is appropriately aligned with the wall portion 62 when the lower housing component 20 is moved toward the middle housing component 22. When the lower housing component 20 is fit to the middle housing component 22, snap tabs extending from the upper housing component 24 fit within tab retainers extending from the lower housing component 20, to secure the upper housing component 24 to the lower housing component 20,

with the middle housing component 22 sandwiched therebetween. Although not visible in the cross-sectional view of FIG.1, substantially similar snap tabs 168 and tab retainers 170 are shown on the vent valve assembly 110 of FIG. 3. The function of snap tabs and retainers for connecting plastic components are readily understandable to a person of ordinary skill in the art. In all embodiments, the snap tabs 168 can be on either the first housing component or the third housing component, with the retainers on the other of the first housing component and the third housing component.

**[0020]** Alternatively, the vent valve assembly 10 can be assembled along axis E by first assembling the middle housing component 22 to the lower housing component 20, and then assembling the upper housing component 24 to the middle housing component 22. It will be appreciated in light of the disclosure that the middle housing component 22, the lower housing component 20, and the upper housing component 24 provide ornamental features aside from the functional features described herein.

Second Embodiment

**[0021]** FIG. 2 shows another embodiment of a vent valve assembly 110 that functions in a substantially similar manner as vent valve assembly 10. Vent valve assembly 110 is designed to be mounted within a fuel tank 111 to control venting of fuel vapor from the fuel tank 111. The vent valve assembly 110 includes both a liquid-vapor discriminating valve (LVDV) 112 and a pressure-holding valve (PHV) 114. The vent valve assembly 110 is configured for ease of assembly along a single axis EE with a reduced number of assembly steps. Additionally, the pressure-holding valve 114 is laterally-offset from the LVDV 112. This allows the LVDV 112 to be positioned closer to an upper wall of the fuel tank 111, resulting in the LVDV 112 closing at a higher fuel height.

**[0022]** The vent valve assembly 110 includes three housing components: a first housing component 120, a second housing component 122, and a third housing component 124. The first housing component 120 is also referred to as a lower housing component as it is lowest within the fuel tank 111 when the valve assembly 110 is mounted within the tank 111. The second housing component 122 is referred to herein as a middle housing component or midplate, as it is sandwiched and trapped between the upper housing component 124 and the lower housing component 120 when the vent valve assembly 110 is assembled. The third housing component 124 is

referred to herein as an upper housing component, as it is highest in the fuel tank 111 when the vent valve assembly 110 is mounted within the fuel tank 111. The upper housing component 124 is configured to mount directly to the inner surface 117 of the upper wall of the fuel tank 111 by heat fusion. If the fuel tank 111 is a plastic material, the upper housing component 124 can be pressed against the fuel tank 111 when the fuel tank 111 is still relatively hot after injection molding. A portion of the fuel tank material 111 will flow into an opening 113 in the upper housing component 124, creating a fusion of the tank 111 to the upper housing component 124. The material within the opening 113 serves as a rivet. Additional similar openings in the upper housing component 124 for securing the upper housing component 124 to the fuel tank are also provided but are not visible in the cross-section of FIG. 2.

**[0023]** The middle housing component 122 includes a first opening 126 above the LVDV 112 and a second opening 128 below the PHV 114. The second opening 128 is both axially-displaced and laterally-displaced from the first opening 126. The middle housing component 122 establishes a nonlinear flow path between the lower housing component 120 and the upper housing component 124 to direct vapor flow from the LVDV 112 to the PHV 114, thereby allowing the PHV 114 to be laterally-spaced from the LVDV 112 instead of directly above the LVDV 112.

**[0024]** The LVDV 112 includes a float 130 that is spring-biased toward the opening 126 by a spring 132. An opening 134 in the lower housing component 120 allows vapor to pass through the lower housing portion 120 and through the opening 126. When liquid fuel level in the fuel tank 111 is at a predetermined level, the float 130 rises to block the opening 126, as shown. A peel-away device 135 hinged to the float 130 at pivot 136 blocks the opening 126 when the float 130 rises. The float 130 rises a predetermined amount from a lowered position to the shutoff position shown in which the peel-away device 135 is against the middle housing component 122 at the opening 126. Because vapor is not vented, liquid level within the tank 111 can no longer rise and liquid fuel backs up within a fuel pipe to shut off a dispensing nozzle (not shown). If vapor pressure within the fuel tank 111 rises above a predetermined pressure, however, the balance of forces on the peel-away device 135 will cause it to peel away from the opening 126 sufficiently to relieve vapor pressure. Vapor then passes from the fuel tank vapor space through opening 134 and first opening 126 along vapor flow path indicated by arrow AA. When liquid level within the tank 111

falls so that the float 130 is lowered, vapor also vents along the flow path of arrow AA.

**[0025]** The PHV 114 includes a weighted disc 140 positioned within a retainer 142 formed by the upper housing component 124. Gravity causes the disc 140 to block the second opening 128 unless vapor pressure below the opening 128 rises to a predetermined level, at which point the disc 140 lifts, allowing vapor that has flowed along the vapor flow path from the first opening 126 to the second opening 128, as indicated by arrow BB, to continue along the vapor flow path, as indicated by arrow CC, through a vent valve assembly outlet 144 to a vapor recovery system. The middle housing portion 122 has a laterally-extending wall portion 146, axial-extending wall portions 148, 149 and laterally-extending wall portion 151 that define a nonlinear flow path from the first opening 126 to the second opening 128, directing vapor flow from the LVDV 112 to the PHV 114.

**[0026]** The upper housing component 124, middle housing component 122 and lower housing component 120 are configured with complementary features allowing them to be assembled to one another in one direction DD along a single axis EE. That is, the vent valve assembly 110 assembles along a single axis parallel to the direction of extension of ridges 150, 152. The axis EE indicates the direction of assembly only (upward and/or downward along the axis EE). Specifically, the upper housing component 124 has ridges 150 that press-fit to ridges 152 of the middle housing component 122 at various locations to form labyrinth seals 154. The disc 140 is placed on the middle housing component 122, and then the middle housing component 122 is moved toward the upper housing component 124 in direction DD to secure the ridges 150 to the ridges 152. The ridges 150 are appropriately aligned with the ridges 152 when the middle housing component 122 is moved toward the upper housing component 124. Alternatively, the upper housing component 124 may be moved toward the middle housing component 122.

**[0027]** Next, the float 130 and spring 132 are supported on the lower housing component 120, and the lower housing component 120 is moved toward the middle housing component 122 in direction DD. Alternatively, the middle housing component 122 may be moved downward toward the lower housing component 120 along axis EE in a direction opposed to direction DD. The lower housing component 120 also has a ridge 160 and a wall portion 162 that press-fits to wall portion 148 of the middle housing component 122 to form a labyrinth seal 164. The ridge 160 is

appropriately aligned with the wall portion 148 when the lower housing component 120 is moved toward the middle housing component 122. Ridges 160 of the lower housing component 120 also fit to the middle housing component 122 at ridges 161 to form another labyrinth seal 164. When the lower housing component 120 is fit to the middle housing component 122, snap tabs 168 extending from the upper housing component 124 fit within tab retainers 170 extending from the lower housing component 120, to secure the upper housing component 124 to the lower housing component 120, with the middle housing component 122 sandwiched therebetween. The snap tabs 168 and tab retainers 170 are shown in FIG. 3. FIG. 3 shows the components of the vent valve assembly 110 aligned for assembly as described.

**[0028]** Alternatively, the vent valve assembly 110 can be assembled along axis EE by first assembling the middle housing component 122 to the lower housing component 120, and then assembling the upper housing component 124 to the middle housing component 122. It will be appreciated in light of the disclosure that the middle housing component 122, the lower housing component 120, and the upper housing component 124 provide ornamental features aside from the functional features described herein.

Third Embodiment

**[0029]** FIG. 4 shows a third embodiment of a vent valve assembly 210 that functions in a substantially similar manner as vent valve assembly 10 of FIG. 1. Vent valve assembly 210 is designed to be mounted within a fuel tank 211 to control venting of fuel vapor from the fuel tank 211. The vent valve assembly 210 includes both a liquid-vapor discriminating valve (LVDV) 212 and a pressure-holding valve (PHV) 214. The vent valve assembly 210 is configured for ease of assembly along a single axis E1 with a reduced number of assembly steps. Additionally, the pressure-holding valve 214 is laterally-offset from the LVDV 212. This allows the LVDV 212 to be positioned closer to an upper wall of the fuel tank 211, resulting in the LVDV 212 closing at a higher fuel height.

**[0030]** The vent valve assembly 210 includes three housing components: a first housing component 220, a second housing component 222, and a third housing component 224. The first housing component 220 is also referred to as a lower housing component as it is lowest within the fuel tank 211 when the valve assembly 210 is mounted within the tank 211. The second housing component 222 is referred

to herein as a middle housing component or midplate, as it is sandwiched and trapped between the upper housing component 224 and the lower housing component 220 when the vent valve assembly 210 is assembled. The third housing component 224 is referred to herein as an upper housing component, as it is highest in the fuel tank 211 when the vent valve assembly 210 is mounted within the fuel tank 211. The third housing component 224 mounts directly to the fuel tank 211. The third housing component 224 has extensions 225 forming cavities 227 in an upper surface. If the fuel tank 211 is plastic, when the fuel tank 211 is relatively hot, the upper housing component 224 can be pressed to an inner surface 217 of an upper wall of the fuel tank 211, causing material of both the upper housing component 224 and the fuel tank 211 to fuse together, with material of the fuel tank 211 filling the cavities 227, forming an integral joint. It will be appreciated in light of the disclosure that the first housing component 220, the second housing component 222, and the third housing component 224 provide ornamental features aside from the functional features described herein.

**[0031]** The middle housing component 222 includes a first opening 226 above the LVDV 212 and a second opening 228 above the PHV 214, rather than below as in the first two embodiments. The second opening 228 is both axially-displaced and laterally-displaced from the first opening 226. The middle housing component 222 establishes a nonlinear flow path between the lower housing component 220 and the upper housing component 224 to direct vapor flow from the LVDV 212 to the PHV 214, thereby allowing the PHV 214 to be laterally-spaced from the LVDV 212 instead of directly above the LVDV 212.

**[0032]** The LVDV 212 includes a float 230 that is spring-biased toward the opening 226 by a spring 232. An opening 234 in the lower housing component 220 allows vapor to pass through the lower housing portion 220 and through the opening 226. When liquid fuel level in the fuel tank 211 is at a predetermined level, the float 230 rises to block the opening 226. A peel-away device 235 hinged to the float 230 at pivot 236 blocks the opening 226 when the float 230 rises. The float 230 rises a predetermined amount from a lowered position shown to the shutoff position in which the peel-away device 235 is against the middle housing component 222 at the opening 226. Because vapor is not vented, liquid level within the tank 211 can no longer rise and liquid fuel backs up within a fuel pipe to shut off a dispensing nozzle (not shown). If vapor pressure within the fuel tank 211 rises above a predetermined

pressure, however, the balance of forces on the peel-away device 235 will cause it to peel away from the opening 226 sufficiently to relieve vapor pressure. Vapor then passes from the fuel tank vapor space through opening 234 and first opening 226 along vapor flow path indicated by arrow A1. The middle housing component 222 has a wall portion 246 that forms an island. Forward of the cross-section area shown, the middle housing component 222 slopes downward from the wall portion 246, similar to the slope shown on either end of wall portion 246. The opening 226 is in fluid communication with the opening 228 around all sides of the wall portion 246. This allows vapor flow from the opening 226 to the opening 228. When liquid level within the tank 211 falls so that the float 230 is lowered as shown, vapor also vents along the flow path of arrow A1.

**[0033]** The PHV 214 includes a spring-biased valve body 240 biased to a closed position (not shown) by a spring 241 to block the second opening 228 unless vapor pressure above the opening 228 rises to a predetermined level, at which point the valve body 240 compresses the spring 241 as shown, allowing vapor that has flowed along the vapor flow path from the first opening 226 to the second opening 228, as indicated by arrow B1, to continue along the vapor flow path, as indicated by arrow C1, through a vent valve assembly outlet 244 to a vapor recovery system. A ball valve 243 within the valve body 240 allows over-vacuum relief of the fuel tank 211 by permitting vapor flow into the fuel tank 211 through outlet 244 when a pressure differential between the pressure at the outlet 244 and a pressure in the tank 211 is above a predetermined level.

**[0034]** The middle housing portion 222 has the laterally-extending wall portion 246 forming the island, axial-extending wall portions 248, 249 and laterally-extending wall portion 251 that define a nonlinear flow path from the first opening 226 to the second opening 228, directing vapor flow from the LVDV 212 to the PHV 214.

**[0035]** The upper housing component 224, middle housing component 222 and lower housing component 220 are configured with complementary features allowing them to be assembled to one another in one direction D1 along a single axis E1. Specifically, the upper housing component 224 has ridges 250 that press-fit to ridges 252 of the middle housing component 222 at various locations to form labyrinth seals 254 when the middle housing component 222 is moved toward the upper housing component 224 in a direction D1 along axis E1. The valve body 240

and spring 241 are placed on the lower housing component 220, and the float 230 and spring 232 are also placed on the lower housing component 220. The lower housing component 220 is moved toward the middle housing component 222. The lower housing component 220 also has ridges 260 that press-fit to wall portions 261 of the middle housing component 222 to form labyrinth seals 264. The ridges 260 are appropriately aligned with the wall portions 261 when the lower housing component 220 is moved toward the middle housing component 222. When the lower housing component 220 is fit to the middle housing component 222, snap tabs extending from the upper housing component 224 fit within tab retainers extending from the lower housing component 222, to secure the upper housing component 224 to the lower housing component 220, with the middle housing component 222 sandwiched therebetween. The snap tabs and tab retainers are substantially similar to those shown in FIG. 3.

**[0036]** Alternatively, the vent valve assembly 210 can be assembled along axis E1 but in an opposing direction to direction D1 by first assembling the middle housing component 222 to the lower housing component 220, and then assembling the upper housing component 224 to the middle housing component 222.

Fourth Embodiment

**[0037]** FIG. 5 shows another embodiment of a vent valve assembly 310 that functions in a substantially similar manner as vent valve assembly 10. Vent valve assembly 310 is designed to be mounted within a fuel tank 311 to control venting of fuel vapor from the fuel tank 311. The vent valve assembly 310 includes both a liquid-vapor discriminating valve (LVDV) 312 and a pressure-holding valve (PHV) 314. The vent valve assembly 310 is configured for ease of assembly along a single axis E2 with a reduced number of assembly steps. Additionally, the pressure-holding valve 314 is laterally-offset from the LVDV 312. This allows the LVDV 312 to be positioned closer to an upper wall of the fuel tank 311, resulting in the LVDV 312 closing at a higher fuel height.

**[0038]** The vent valve assembly 310 includes three housing components: a first housing component 320, a second housing component 322, and a third housing component 324. The first housing component 320 is also referred to as a lower housing component as it is lowest within the fuel tank 311 when the valve assembly 310 is mounted within the tank 311. The second housing component 322 is referred to herein as a middle housing component or midplate, as it is sandwiched and trapped

between the upper housing component 324 and the lower housing component 320 when the vent valve assembly 310 is assembled. The third housing component 324 is referred to herein as an upper housing component, as it is highest in the fuel tank 311 when the vent valve assembly 310 is mounted within the fuel tank 311. The upper housing component 324 is configured to mount directly to the inner surface 317 of the upper wall of the fuel tank 311 by heat fusion. If the fuel tank 311 is a plastic material, the upper housing component 324 can be mounted directly to the fuel tank 311 if pressed against the fuel tank 311 when the fuel tank 311 is still relatively hot after injection molding. The third housing component 324 has extensions 325 forming cavities 327 in an upper surface. If the fuel tank 311 is plastic, when the fuel tank 311 is relatively hot, the upper housing component 324 can be pressed to the fuel tank 311, causing material of both the upper housing component 324 and the fuel tank 311 to fuse together, with material of the fuel tank 311 filling the cavities 327, forming an integral joint. It will be appreciated in light of the disclosure that the first housing component 320, the second housing component 322, and the third housing component 324 provide ornamental features aside from the functional features described herein.

**[0039]** The middle housing component 322 includes a first opening 326 above the LVDV 312 and a second opening 328 below the PHV 314. The second opening 328 is both axially-displaced and laterally-displaced from the first opening 326. The middle housing component 322 establishes a nonlinear flow path between the lower housing component 320 and the upper housing component 324 to direct vapor flow from the LVDV 312 to the PHV 314, thereby allowing the PHV 314 to be laterally-spaced from the LVDV 312 instead of directly above the LVDV 312.

**[0040]** The LVDV 312 includes a float 330 that is spring-biased toward the opening 326 by a spring 332. An opening 334 in the lower housing component 320 allows vapor to pass through the lower housing portion 320 and through the opening 326. When liquid fuel level in the fuel tank 311 is at a predetermined level, the float 330 rises to block the opening 326, as shown. A peel-away device 335 hinged to the float 330 at pivot 336 blocks the opening 326 when the float 330 rises. The float 330 rises a predetermined amount from a lowered position to the shutoff position shown in which the peel-away device 335 is against the middle housing component 322 at the opening 326. Because vapor is not vented, liquid level within the tank 311 can no longer rise and liquid fuel backs up within a fuel pipe to shut off a dispensing nozzle

(not shown). If vapor pressure within the fuel tank 311 rises above a predetermined pressure, however, the balance of forces on the peel-away device 335 will cause it to peel-away from the opening 326 sufficiently to relieve vapor pressure. Vapor then passes from the fuel tank vapor space through opening 334 and first opening 326 along vapor flow path indicated by arrow A2. When liquid level within the tank 311 falls so that the float 330 is lowered, vapor also vents along the flow path of arrow A2. The middle housing component 322 has a wall portion 346 that forms an island. Forward of the cross-section area shown, the middle housing component 322 slopes downward from the wall portion 346, similar to the slope shown on either end of wall portion 346. The opening 326 is in fluid communication with the opening 328 around all sides of the wall portion 346. This allows vapor flow from the opening 326 to the opening 328. When liquid level within the tank 311 falls so that the float 330 is lowered as shown, vapor also vents along the flow path of arrow A2.

**[0041]** The PHV 314 includes a weighted disc 340 positioned within a retainer 342 formed by the upper housing component 324. Gravity causes the disc 340 to block the second opening 328 unless vapor pressure below the opening 328 rises to a predetermined level, at which point the disc 340 lifts, allowing vapor that has flowed along the vapor flow path from the first opening 326 to the second opening 328, as indicated by arrow B2, to continue along the vapor flow path, as indicated by arrow C2, through a vent valve assembly outlet 344 to a vapor recovery system. The middle housing portion 322 has axial-extending wall portions 348, 349 and laterally-extending wall portion 351 that define a nonlinear flow path from the first opening 326 to the second opening 328, directing vapor flow from the LVDV 312 to the PHV 314. The lower housing portion 320 has another inlet 341 that is in communication with a separate valve or vapor source to vent through the PHV 314.

**[0042]** The upper housing component 324, middle housing component 322 and lower housing component 320 are configured with complementary features that allow them to be assembled to one another in one direction D2 along a single axis E2. That is, the vent valve assembly 310 assembles along a single axis parallel to the direction of extension of ridges 350, 352. The axis E2 indicates the direction of assembly only (upward and/or downward along the axis E2). Specifically, the upper housing component 324 has ridges 350 that press-fit to ridges 352 of the middle housing component 322 at various locations to form labyrinth seals 354. The disc 340 is placed on the middle housing component 322, and then the middle housing

component 322 is moved toward the upper housing component 324 in direction D2 to secure the ridges 350 to the ridges 352. The ridges 350 are appropriately aligned with the ridges 352 when the middle housing component 322 is moved toward the upper housing component 324. Alternatively, the upper housing component 324 may be moved toward the middle housing component 322.

**[0043]** Next, the float 330 and spring 332 are supported on the lower housing component 320, and the lower housing component 320 is moved toward the middle housing component 322 in direction D2. Alternatively, the middle housing component 322 may be moved downward toward the lower housing component 320 along axis E2 in a direction opposed to direction D2. The lower housing component 320 also has ridges 360 that press-fit to ridges 361 of the middle housing component 322 to form a labyrinth seal 364. The ridges 360 are appropriately aligned with the ridges 361 when the lower housing component 320 is moved toward the middle housing component 322. When the lower housing component 320 is fit to the middle housing component 322, snap tabs extending from the upper housing component fit within tab retainers extending from the lower housing component, to secure the upper housing component 324 to the lower housing component 320, with the middle housing component 322 sandwiched therebetween. The snap tabs and tab retainers are substantially similar to tabs 168 and retainers 170 shown in the embodiment of FIG. 3. Alternatively, the vent valve assembly 310 can be assembled along axis E2 by first assembling the middle housing component 322 to the lower housing component 320, and then assembling the upper housing component 324 to the middle housing component 322.

**[0044]** While the best modes for carrying out the many aspects of the present teachings have been described in detail, those familiar with the art to which these teachings relate will recognize various alternative aspects for practicing the present teachings that are within the scope of the appended claims.

THE CLAIMS DEFINING THE INVENTION ARE AS FOLLOWS:

1. A vent valve assembly comprising:

a first housing component;

a second housing component;

a third housing component;

a first valve;

a second valve;

wherein the first, second, and third housing components are configured to assemble together along one directional axis with the second housing component, the first valve and the second valve between the first and third housing components and with the second valve laterally-spaced from the first valve; and wherein the assembled first, second, and third housing components define a nonlinear vapor flow path that redirects vapor from the first valve to the second valve the second housing component defining a first opening that functions as a vapor vent of the first valve; wherein the second housing component defines a second opening that functions as a vapor vent of the second valve; and wherein vapor flows from the first opening to the second opening.

2. The vent valve assembly of claim 1, wherein the first valve is configured to block the first opening in the second housing component when the first valve is lifted by a predetermined amount; wherein the second valve is configured to prevent vapor that has passed through the first opening from passing through the second opening in the second housing component when pressure of the vapor is below a predetermined pressure.

3. The vent valve assembly of claim 1 or claim 2, wherein the second opening is axially-displaced from the first opening so that a vapor flow path through the vent valve assembly is nonlinear.

4. The vent valve assembly of any one of the preceding claims, wherein the first opening in the second housing component is between the first valve and the third housing component; and wherein the second opening in the second housing component is between the second valve and the first housing component.

5. The vent valve assembly of any one of the preceding claims, wherein the second valve is biased to a closed position by gravity.

6. The vent valve assembly of any one of the preceding claims, wherein the second valve includes a spring that biases the second valve to a closed position.

7. The vent valve assembly of any one of the preceding claims, wherein the first housing component and the second housing component are configured with

complementary features that interfit to form a labyrinth seal to hold the first housing component to the second housing component; and wherein the second housing component and the third housing component are configured with complementary features that interfit to form another labyrinth seal to hold the second housing component to the third housing component.

8. The vent valve assembly of any one of the preceding claims, wherein the first valve is a liquid-vapor discriminating valve; and wherein the second valve is a pressure-holding valve.

9. The vent valve assembly of any one of the preceding claims, wherein one of the first housing component and the third housing component has tab retainers; and wherein the other of the first housing component and the third housing component has snap tabs extending therefrom configured to snap into and be retained by the tab retainers to attach the first housing component to the third housing component.

10. The vent valve assembly of any one of the preceding claims in combination with a fuel tank, wherein the third housing component is configured to be heat fused directly to an inner surface of the fuel tank.

11. A vent valve assembly for a fuel tank comprising:

a housing including a first, a second, and a third housing component;

a liquid-vapor discriminating valve;

a pressure-holding valve;

wherein the first, second, and third housing components are configured to assemble to one another in one direction along an axis, with the second housing component sandwiched between the first and third housing components and the pressure-holding valve displaced laterally from the liquid- vapor discriminating valve;

wherein the liquid-vapor discriminating valve is configured to block flow that passes through the first component from passing through a first opening in the second component when a float of the liquid-vapor discriminating valve is lifted by a predetermined amount to a shut-off position; and

wherein the pressure-holding valve is configured to prevent vapor that has passed through the first opening from passing through a second opening in the second housing component when pressure of the vapor is below a predetermined pressure; and

wherein the liquid-vapor discriminating valve moves past an axial position of the second opening when the liquid-vapor discriminating valve is lifted to the shutoff position.

12. The vent valve assembly of claim 11, wherein the first housing component and the second housing component are configured with complementary features that interfit

to form a labyrinth seal to hold the first housing component to the second housing component; and

wherein the second housing component and the third housing component are configured with complementary features that interfit to form another labyrinth seal to hold the second housing component to the third housing component.

13. The vent valve assembly of claim 11 or claim 12, wherein one of the first housing component and the third housing component has tab retainers; wherein the other of the first housing component and the third housing component has snap tabs extending therefrom configured to snap into and be retained by the retainers to attach the first housing component to the third housing component.

14. A method of assembling a fuel tank vent valve assembly having a first valve and a second valve, comprising:

assembling a first, a second, and a third housing component to one another along one directional axis so that the first valve and the second valve are laterally displaced from one another between the first and third housing components, and the second housing component is between the first and third housing components and configured with a first opening to permit vapor flow from the first valve to the second valve, and a second opening to permit vapor flow past the second valve; wherein the first opening is displaced from the second opening along the axis so that vapor flows in one direction along the axis through the first opening, and then flows in an opposing direction along the axis to reach the second opening; and wherein said assembling includes snapping tabs that extend from one of the first housing component and the third housing component to retainers on the other of the first housing component and the third housing component to retain the first housing component to the third housing component with the second housing component trapped therebetween.

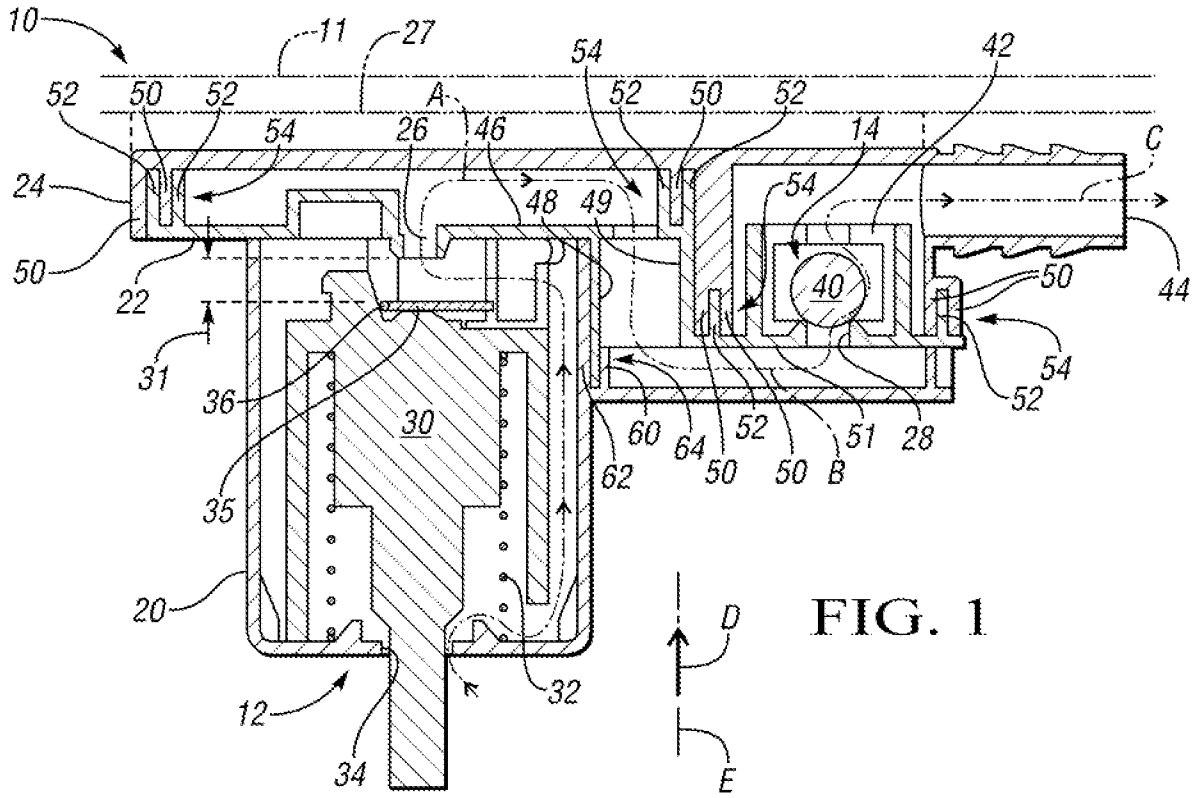
10
11
27
54
42
52
50
52
A
52
50
52
54
26
46
14
C
24
48
49
54
50
22
40
50
44
31
54
36
52
30
60
64
52
51
28
62
50
50
B
35
20
D
32
12
34
E

FIG. 1

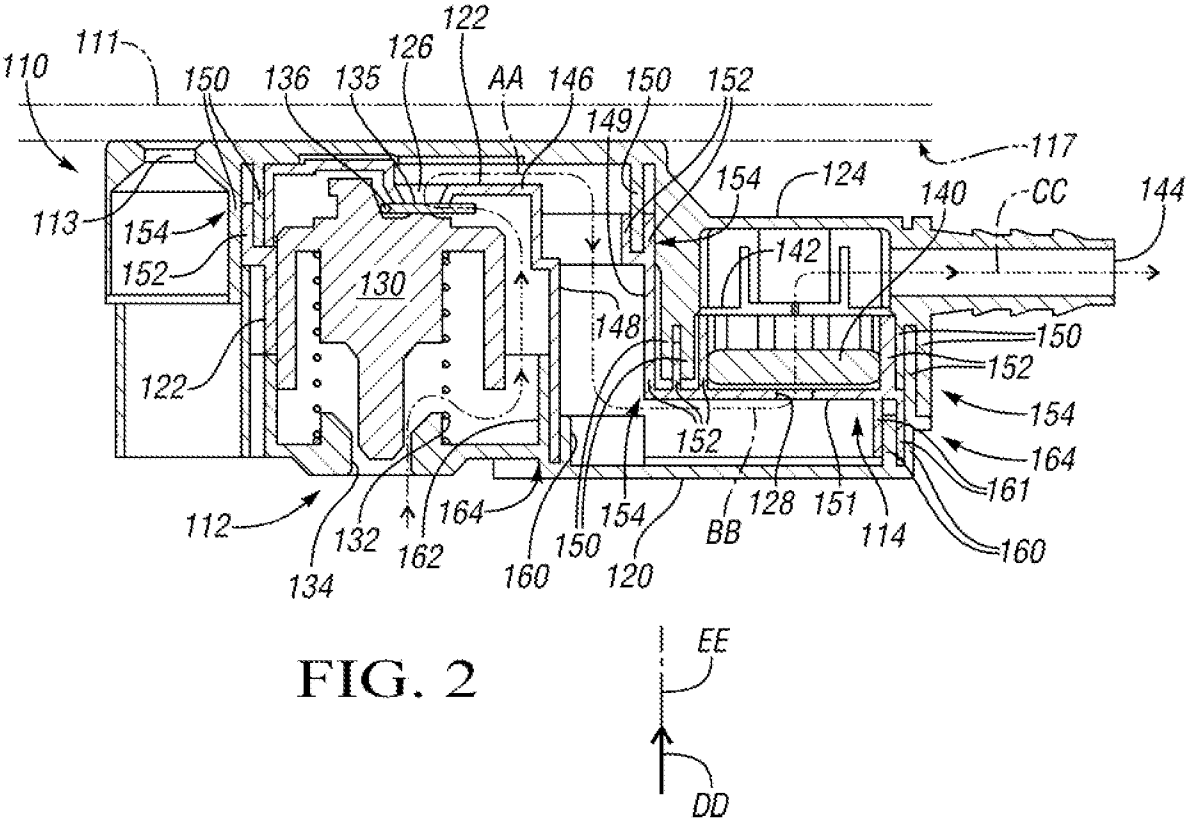
122
111
126
110
150
136
135
AA
146
150
152
149
117
154
124
140
CC
144
113
154
152
142
130
148
150
122
152
154
164
161
112
132
164
154
128
151
160
134
162
150
120
BB
114
EE
DD

FIG. 2

FIG. 3

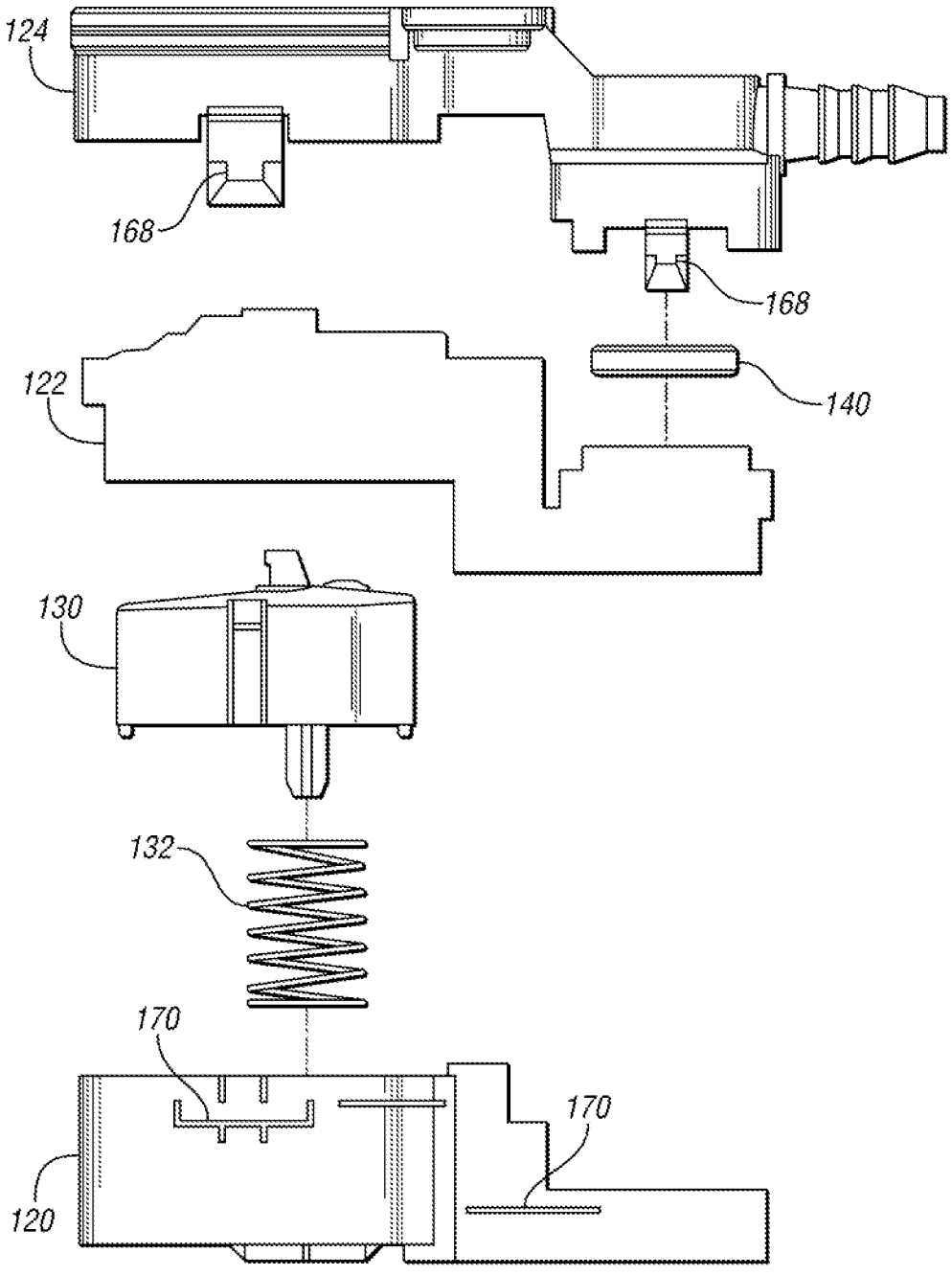

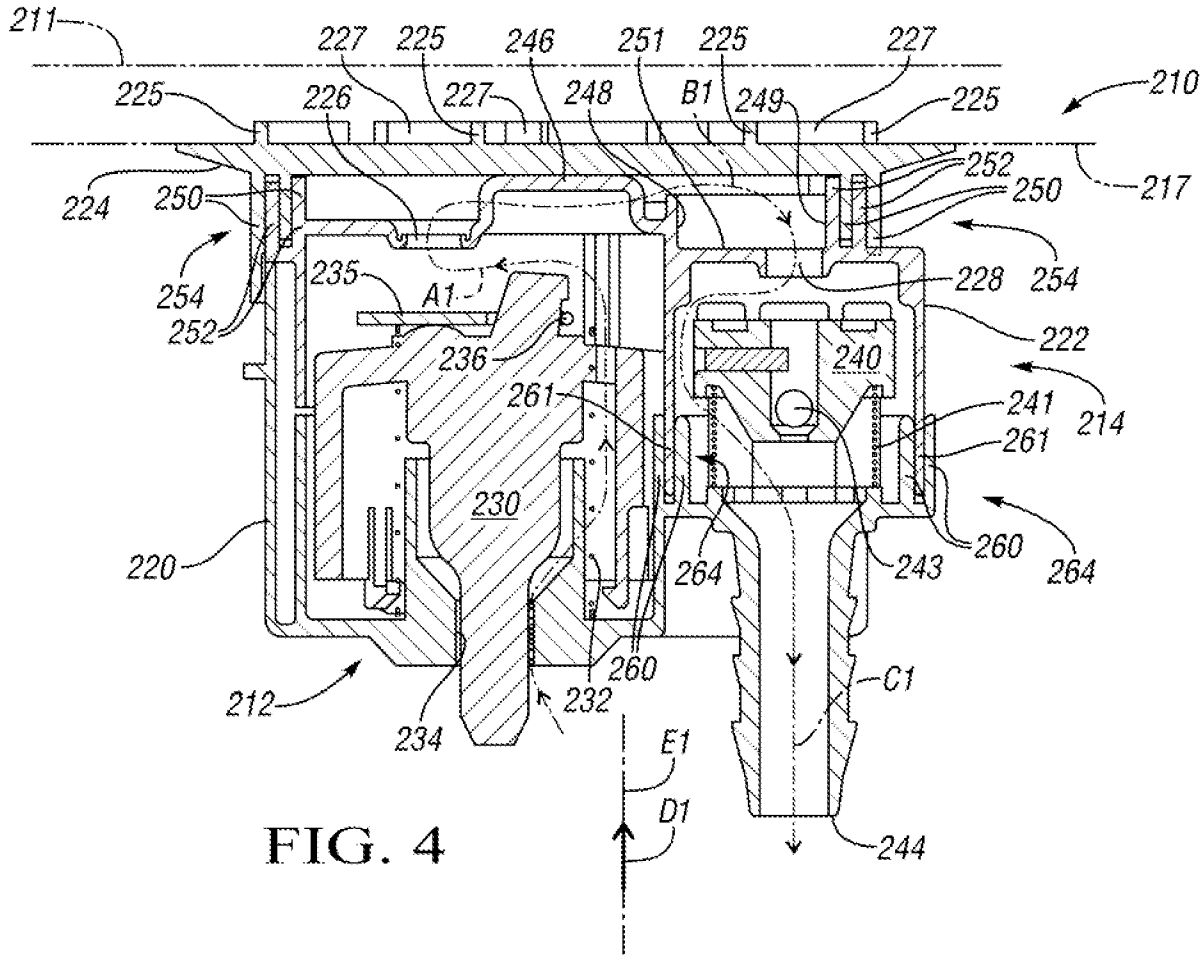
211
227
225
246
251
225
227
210
225
226
227
248
B1
249
225
224
250
252
250
217
254
235
A1
228
254
252
236
240
222
261
241
214
261
230
220
264
243
260
264
212
260
232
C1
234
E1
D1
244

FIG. 4

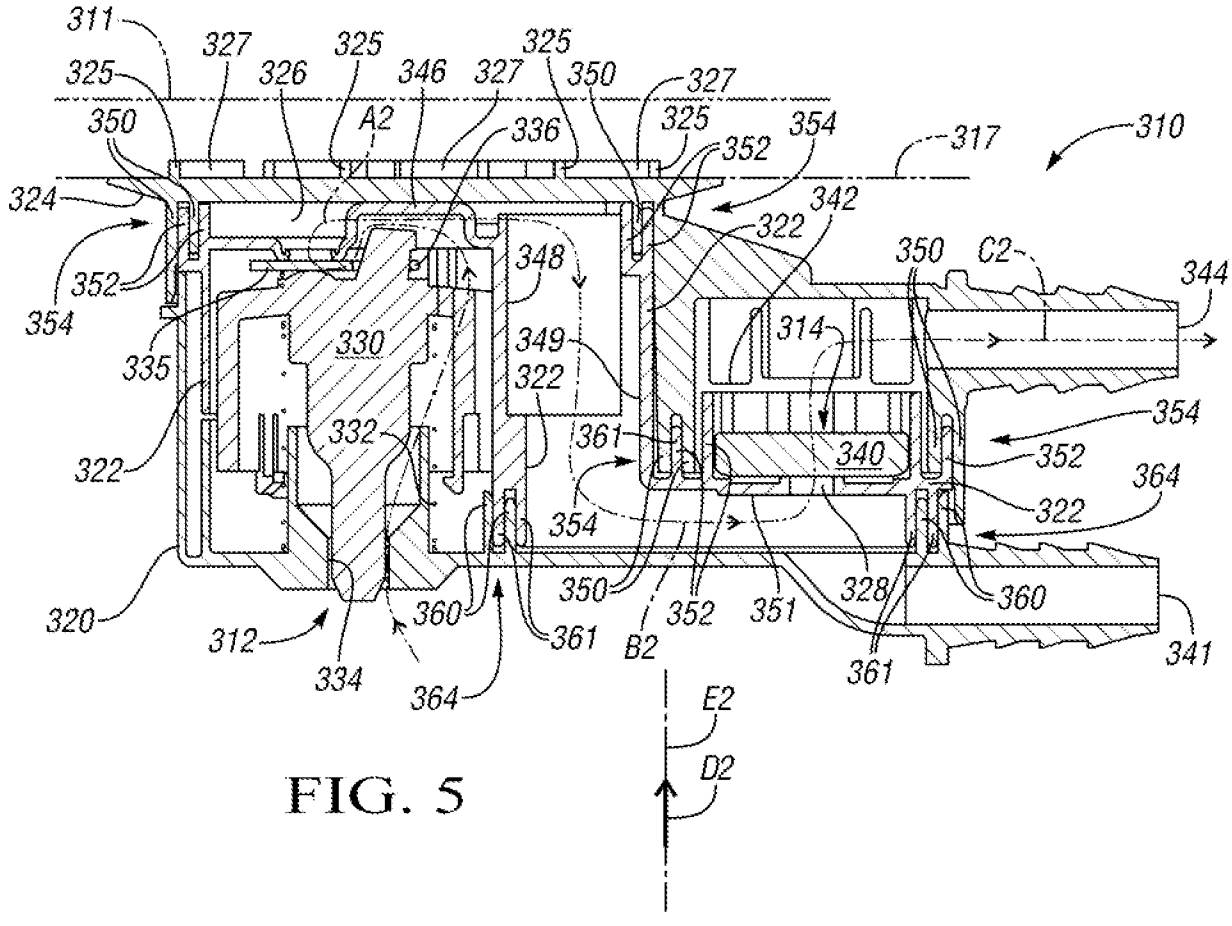
311
327
325
325
325
326
346
327
350
327
350
A2
336
325
352
354
317
310
324
342
322
350
C2
344
352
348
354
314
335
330
349
322
354
322
332
361
340
352
364
354
322
320
350
352
351
328
360
312
360
361
B2
361
341
334
364
E2
D2

FIG. 5