PCT WORLD INTELLECTUAL PROPERTY ORGANIZATION
International Bureau

INTERNATIONAL APPLICATION PUBLISHED UNDER THE PATENT COOPERATION TREATY (PCT)

(51) International Patent Classification 5 : **F25B 9/00, F25D 17/02**

A1

(11) International Publication Number: **WO 91/14141**

(43) International Publication Date: 19 September 1991 (19.09.91)

(21) International Application Number: PCT/GB91/00311

(22) International Filing Date: 28 February 1991 (28.02.91)

(30) Priority data:
9004427.2 28 February 1990 (28.02.90) GB

(71) Applicant *(for all designated States except US):* NATIONAL RESEARCH DEVELOPMENT CORPORATION [GB/GB]; 101 Newington Causeway, London SE1 6BU (GB).

(72) Inventors; and
(75) Inventors/Applicants *(for US only) :* BRADSHAW, Thomas, William [GB/GB]; 3 St. James' View, East Hanney, Wantage, Oxfordshire OX12 0HT (GB). ORLOWSKA, Anna, Helena [GB/GB]; 13 Richmond Road, Oxford OX1 2JJ (GB).

(74) Agent: GASKIN, John, Shield; Patents Department, National Research Development Corporation, 101 Newington Causeway, London SE1 6BU (GB).

(81) Designated States: AT (European patent), BE (European patent), CH (European patent), DE (European patent), DK (European patent), ES (European patent), FR (European patent), GB (European patent), GR (European patent), IT (European patent), JP, LU (European patent), NL (European patent), SE (European patent), US.

Published
With international search report.
Before the expiration of the time limit for amending the claims and to be republished in the event of the receipt of amendments.

(54) Title: CRYOGENIC COOLING APPARATUS

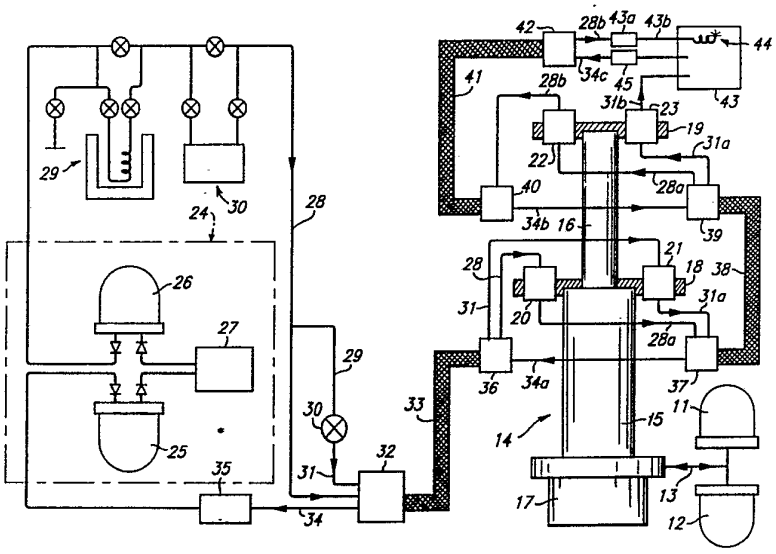

(57) Abstract

The invention provides a controlled connection, or heat switch, between a source of cryogenic cooling and an item (56) which is to be cooled, using control valve means (30, 63) which is not itself subjected to the cryogenic temperatures involved. In one aspect, the invention provides cooling means, comprising a source of flow (25-27, 57) of a fluid, a supply line (29, 58) for supplying fluid from said source to a first heat exchanger (20-23, 59), where it is cooled by a source of cryogenic cooling (11-19, 55), and thereafter to a second heat exchanger (43, 60) where it is in heat-exchanging relationship with an item (56) to be cooled by the cryogenic cooling source (11-19, 55) and a return line (34, 61) for return flow of the fluid from the second heat exchanger (43, 60) to the fluid flow source (25-27, 57), the return line (34, 61) and the supply line (29, 58) between the fluid flow source (25-27, 57) and the first heat exchanger (20-23, 59) being in heat exchange relationship with one another in a third heat exchanger (33, 62), wherein between the fluid flow source (25-27, 57) and the third heat exchanger (33, 62) there is included in the supply line (29, 58) or the return line (34, 61) a control valve (30, 63) whereby the flow of fluid through the supply line (29, 58) and from the first to the second heat exchanger can be controlled. One embodiment is constituted by a multi-stage cryogenic cooling apparatus having a closed-loop. Joule-Thomson expansion stage and at least one pre-cooler stage (20-23), the Joule-Thomson stage comprising

a gas compressor (25, 26), a Joule-Thomson expansion block (43) constituted as a flow-restricting expansion valve (44), and a Joule-Thomson stage heat exchanger (41) and the pre-cooler stage (20-23) being arranged to pre-cool gas in the high pressure line (28) before it enters the Joule-Thomson stage heat exchanger (41), wherein the high-pressure gas line of the Joule Thomson stage is provided, upstream of its interaction with the pre-cooler stage (20-23) with a branch (29) leading through a bypass valve (30) (when open) to a bypass line (32) which bypasses the Joule-Thomson stage heat exchanger (41), opens into the expansion block (43) and offers a less constricted gas route than the flow-restricting expansion valve (44).

FOR THE PURPOSES OF INFORMATION ONLY

Codes used to identify States party to the PCT on the front pages of pamphlets publishing international applications under the PCT.

AT	Austria	FI	Finland	ML	Mali
AU	Australia	FR	France	MN	Mongolia
BB	Barbados	GA	Gabon	MR	Mauritania
BE	Belgium	GB	United Kingdom	MW	Malawi
BF	Burkina Faso	GN	Guinea	NL	Netherlands
BG	Bulgaria	GR	Greece	NO	Norway
BJ	Benin	HU	Hungary	PL	Poland
BR	Brazil	IT	Italy	RO	Romania
CA	Canada	JP	Japan	SD	Sudan
CF	Central African Republic	KP	Democratic People's Republic of Korea	SE	Sweden
CG	Congo			SN	Senegal
CH	Switzerland	KR	Republic of Korea	SU	Soviet Union
CI	Côte d'Ivoire	LI	Liechtenstein	TD	Chad
CM	Cameroon	LK	Sri Lanka	TG	Togo
DE	Germany	LU	Luxembourg	US	United States of America
DK	Denmark	MC	Monaco		
ES	Spain	MG	Madagascar		

CRYOGENIC COOLING APPARATUS

This invention relates to cryogenic cooling apparatus.

There are numerous scientific, technological and industrial situations in which a need for cryogenic cooling arises. For example, the performance of many detector devices used for the detection or measurement of very small incident signals is enhanced by reducing the detector-device temperature so as to achieve an improved signal-to-noise ratio. Such cooling has been accomplished in the past by the use of stored solid or liquid cryogens, but such systems have a limited life and a large mass which makes them unsuitable for use in, for example, cooling the detector devices of measuring apparatus carried aboard space probes or earth satellites. Increase in the useful lifetime without undue increase in the overall mass may be achieved by employing a closed cycle cooling system in which the cryogenic working substance, instead of being used "once through" and then exhausted, is recycled indefinitely; and solar-powered electrically-driven Stirling-cycle refrigerators using helium as their cryogenic working fluid have indeed been developed for such purposes. A single-stage Stirling-cycle refrigerator is capable of achieving temperatures down to about 80°K, but for many applications lower temperatures are desirable or necessary. A two-stage Stirling-cycle refrigerator capable of achieving temperatures below 20°K and of producing 200 mW of refrigeration at 30°K, with an operating frequency of about 35Hz and an electrical driving power input of some 90 watts, has recently been described by the inventors of the present invention (Bradshaw, T.W. and Orlowska, A.H.: Proceedings of the 3rd European Symposium on Space Thermal Control and Life Support Systems: ESA SP-288 (1988)); but a Stirling-cycle machine and, indeed, any regenerative-cycle machine, must become increasingly inefficient at very low temperatures due, mainly, to decreasing regenerator effectiveness.

In order to reach very low temperatures (around 4°K) it is therefore necessary in practice to introduce a non-regenerative

cooling stage, and it is known in this context to make use of the Joule-Thomson (J-T) expansion effect, namely that a gas, under high pressure and at a temperature below its inversion temperature, becomes cooled when it is allowed to expand through a flow constrictor to a lower pressure. However, the inversion temperatures of many gases, including helium, are well below ordinary room temperature, and therefore they must first be pre-cooled before they can be further cooled by use of the J-T effect. The required pre-cooling may be effected by means of any suitable refrigerating apparatus, which may, for example, be a Stirling-cycle refrigerator such as one of those referred to above.

The present invention relates, therefore, in one of its aspects, to a multi-stage cryogenic cooling apparatus having a closed-loop J-T expansion stage and at least one pre-cooler stage, the J-T stage comprising a gas compressor, a J-T expansion block, having an inlet arranged to receive high pressure gas via a high-pressure line from the compressor and constituted as a flow-restricting expansion valve therefor and an outlet connected to the compressor via a low-pressure return line, and a J-T stage heat exchanger in which the high-pressure line and the low-pressure return line are in heat-exchanging relationship, and the pre-cooler stage being arranged to pre-cool gas in the high-pressure line before it enters the J-T stage heat exchanger. Such a cryogenic cooling apparatus is referred to hereinafter as apparatus of the defined kind.

In such apparatus of this defined kind, high pressure gas from the compressor is pre-cooled by the pre-cooler stage before passing, via the J-T stage heat exchanger, to the flow-restricting expansion valve through which it expands into the expansion block with the effect of cooling both itself and the expansion block. The resulting low-pressure gas, now at the lowest temperature in the whole system, returns from the expansion block to the compressor via the low-pressure return line, and in doing so it passes through the J-T stage heat

exchanger where it is in heat-exchanging relationship with the high-pressure gas, which is thereby cooled, before it reaches the expansion valve, to a temperature below that already achieved by means of the pre-cooler stage.

The above-described further cooling of the high-pressure gas, below the temperature to which it is pre-cooled by the pre-cooler stage, leads to a progressive cooldown of the expansion block until finally it (and the expanded low pressure gas whose temperature it follows) are at or just above the boiling point of the gas at its pressure on the low-pressure side of the expansion valve; but the rate at which this progressive cooldown occurs is related to the mass flow rate of the gas through the pre-cooler stage (since this governs the rate of heat removal from the J-T expansion stage). This leads to a problem, because the gas density at a given pressure decreases and its viscosity increases, with increasing temperature, with the result that a constricted expansion valve designed to provide a given mass flow rate at the very low designed operating temperature of the expansion block will limit the flow rate at higher temperatures to only a small fraction of the designed mass flow rate and will thus seriously limit the cooling effect and the rate of cooldown in the J-T stage. It has been proposed to overcome this problem by providing a variable orifice as the expansion valve and decreasing its size, as the temperature falls, until finally it allows the designed mass flow rate of gas at the low designed operating temperature of the expansion block; but this requires moving parts which are accurately controllable at very low temperatures, a requirement which is very difficult to implement reliably - especially in, for example, a miniature helium refrigerator with a designed flow rate of only a few milligrams per second at a designed operating temperature of 4°K. A variant which has also been proposed is to provide a fixed-orifice expansion valve dimensioned appropriately for the operating low-temperature conditions and to provide, in parallel with it and also within the expansion block, a bypass valve which, when

open, has a much larger orifice and allows a correspondingly increased flow of gas from the high-pressure line into the expansion block and thence into the low-pressure return line. In this case, the resulting increased flow rate of gas through the J-T stage heat exchanger (in both directions) and through the expansion block while the bypass valve is open leads to a more rapid cooldown of both components to the temperature of the pre-cooler stage, after which the bypass valve is closed so that subsequent flow is only through the constricted expansion valve; but this variant also suffers from the disadvantage that the bypass valve is required to be operable to close it in low-temperature conditions.

It is an object of the present invention to provide, in apparatus of the defined kind, means whereby the rate of cooldown of the J-T expansion stage may be increased without the use of components having moving parts which are required to operate under low-temperature conditions.

To that end, according to the invention, the high-pressure gas line of the J-T stage of apparatus of the defined kind is provided, upstream of its interaction with the pre-cooler stage, with a branch leading through a bypass valve (when open) to a bypass line which opens into the expansion block and offers a less constricted gas route than the flow-restricting expansion valve, the pre-cooler stage being arranged to cool gas flowing in the bypass line, downstream of the bypass valve, before it reaches the expansion block, and the bypass line then leading direct from the pre-cooler stage to the expansion block without passing through the J-T stage heat exchanger.

More generally, it is an object of the invention to provide a controlled connection, or heat switch, between a source of cryogenic cooling and an item which is to be cooled thereby, and to do so by the use of control valve means which is not itself subjected to the cryogenic temperatures involved. According to this more general aspect of the invention, the invention provides cooling means comprisng a source of flow of a fluid, a supply

line for supplying fluid from said source to a first heat exchanger, where it is cooled by a source of cryogenic cooling, and thereafter to a second heat exchanger where it is in heat-exchanging relationship with an item to be cooled by the cryogenic cooling source, and a return line for return flow of the fluid from the second heat exchanger to the fluid flow source, the return line and the supply line between the fluid flow source and the first heat exchanger being in heat exchange relationship with one another in a third heat exchanger, wherein there is included in the supply line or the return line between the fluid flow source and the third heat exchanger a control valve whereby the flow of fluid through the supply line and from the first to the second heat exchanger can be controlled.

In terms of this more general aspect of the invention, cooling means according to the invention as just outlined, and having the said control valve included in the said supply line, may have, in parallel with the latter through the third heat exchanger (in heat exchanging relationship with the return line) and through the first heat exchanger (to be cooled by the cryogenic cooling source) a further supply line connected to supply fluid from the fluid source to the second heat exchanger, with the second heat exchanger constituting a Joule-Thomson expansion block and the further supply line opening thereinto through an inlet constituted as a flow-restricting expansion valve therefor. The return line then constitutes a fluid outlet from the Joule-Thomson expansion block, and the fluid supply line having the said control valve connected in it opens into the expansion block through a less restricting inlet than that provided for the said further supply line, whereby fluid flow into the expansion block is preferentially through the supply line having the control valve connected in it or through the further supply line, respectively, according as the control valve is open or closed.

These and other aspects and advantageous and preferred features of the invention will be disclosed below in the

following description with reference to the accompanying drawings, in which:-

Figure 1 is a schematic diagram of apparatus of the defined kind which incorporates the invention,

Figure 2 is a view, partly in elevation and partly in axial longitudinal section, of a preferred practical embodiment of that part of the apparatus represented in Figure 1 which is shown in the right-hand half of that Figure, and

Figure 3 is a schematic diagram of apparatus in which the invention provides a heat switch between a source of cryogenic cooling and an item which is to be cooled thereby.

The cryogenic cooling apparatus represented in Figure 1 comprises a closed-loop J-T expansion stage, using helium as its working fluid, and a two-stage Stirling-cycle refrigerator which provides two successive pre-cooler stages for the helium of the J-T stage. The Stirling-cycle refrigerator, which is of the known kind described in the above-cited paper by the inventors of the present invention, comprises a pair of electrically driven compressors 11 and 12 which are mounted rigidly with respect to one another, in alignment but in mechanical opposition so that cyclical momentum changes in the one are balanced and cancelled out by the equal and opposite changes in the other, and which act in phase with one another, though a common output line 13, on a displacer unit 14 in which accordingly they effect alternate compression and decompression, suitably at a cycle frequency of about 35Hz, of the Stirling-cycle working fluid which conveniently may also be helium. The displacer unit 14 comprises a stepped cylinder having larger-diameter and small-diameter sections 15 and 16 respectively within which a stepped displacer piston (not shown) is reciprocated, by electrical drive means (not shown, but housed within a housing 17), at the same frequency as that of the compressors 11 and 12 but with a phase displacement of approximately one quarter of a cycle relative thereto. Preferably the displacer unit drive means is a moving

coil motor comprising, in known manner, a coil mounted on the stepped displacer piston for axial movement therewith and disposed in a coaxial annular gap of a permanent magnet system so as to be excited into axial oscillation when supplied with an alternating current from an a.c. current source (not shown); and the compressors 11 and 12, preferably, similarly comprise moving coil motors supplied, with the required phase displacement relative to the displacer unit, with driving current from the same source.

Larger-diameter and smaller-diameter sections of the stepped piston of the displacer unit 14 are both hollow to accommodate respective axially-extending regenerator units communicating at their ends with respective working chambers defined between the stepped cylinder 15, 16 and the stepped piston disposed within it; two of these chambers are located, within the stepped cylinder, at the upper ends of its sections 15 and 16 respectively, and operation of the Stirling-cycle refrigerator results in cooling of the adjacent parts of the cylinder wall, and of respective thermally-conductive collars 18 and 19 mounted thereon in good thermal contact therewith, to temperatures which may be as low as about 100°K and 20°K respectively. The collar 18 has two apertures in which are mounted two pre-cooler units 20 and 21 which are in good thermal contact with the collar 18; and the collar 19 is similarly provided with two further gas pre-cooler units 22 and 23.

The pre-cooler units 20 and 21, and 22 and 23, provide pre-cooler stages for the Joule-Thomson section of the apparatus. This comprises a compressor unit composed of two compressors 25 and 26 arranged in series with a buffer volume or receiver 27 between them. The compressors 25 and 26 are preferably similar to the compressors 11 and 12 and, like them, mounted in alignment but in mechanical opposition so that oscillating momentum forces tend to cancel one another; but the compressors 25 and 26 differ in that they, unlike the compressors 11 and 12, are fitted with one-way inlet and outlet valves so

that low-pressure helium drawn into the compressor 25 is fed under pressure into the receiver 27 and is then further compressed by the compressor 26 and fed to a high pressure gas line 28 fitted, preferably, with a liquid nitrogen trap 29 and a getter 30 for other impurities in the helium. The trap 29 and getter 30 are shown in Figure 1 as being introducible into and removable from the line 28 at will, by appropriate operation of associated valves; but in practice the trap 29, which is used as the means by which the Joule-Thomson section of the apparatus is filled with its working fluid, would usually thereafter be permanently removed whereas the getter 30 would usually be left permanently in the circuit.

The high-pressure line 28 has a branch 29 leading to a normally closed valve 30 which, when open, allows helium into a bypass line 31; and the high-pressure line 28 and the bypass line 31 pass together via a manifold 32 into a first countercurrent heat exchanger 33 in which they are in heat-exchanging relationship with low-pressure helium which has undergone the Joule-Thomson expansion and which emerges from the manifold 32 to connect via a return line 34 with a low-pressure helium receiver 35 which supplies the inlet side of the compressor 25. At its end remote from the manifold 32, the heat exchanger 33 has a manifold 36 from which the high-pressure line 28 and bypass line 31 emerge to open into the pre-cooler units 20 and 21 respectively. Extensions 28a and 31a of the lines 28 and 31 respectively then lead from the pre-cooler units 20 and 21 respectively through a manifold 37 into a second countercurrent heat exchanger 38, to emerge therefrom via a manifold 39 and open into the pre-cooler units 22 and 23 respectively. A further extension 28b of the high pressure line 28 leads from the pre-cooler unit 22 via a manifold 40 into a third countercurrent heat exchanger 41 from which it emerges via a manifold 42 to pass finally via a filter 43a and an inlet line 43b into the expansion chamber of a Joule-Thomson expansion block 43 in which the inlet line 43b terminates in a restricted-orifice expansion valve 44.

The pre-cooler unit 23, on the other hand, is connected by a further extension 31b of the bypass line, which bypasses the third heat exchanger 41, directly into the expansion chamber of the expansion block 43, into which it opens without any constriction comparable to the expansion valve 44.

The low-pressure return line 34 opens, through the manifold 32, to the space surrounding the high-pressure and bypass lines 28 and 31 within the outer tube of the heat exchanger 33, and that space communicates through the manifold 36 and a duct 34a with the manifold 37 and, therethrough, with the similar space within the outer tube of the heat-exchanger 38. That space, similarly, communicates through the manifold 39 and a duct 34b with the manifold 40 and, therethrough, with the space surrounding the high-pressure line section 28b within the outer tube of the heat exchanger 41; and the space within the heat exchanger 41 communicates, through the manifold 42, with the expansion chamber of the expansion block 43 by means of a low-pressure outlet line section 34c which includes a load 45 whose cryogenic cooling it is the purpose of the above-described apparatus to provide. Thus low-pressure helium, leaving the expansion block 44 through the outlet section 34c, flows in turn through the load to be cryogenically cooled and then through the heat exchangers 41, 38 and 33 and, via the line 34, back into the receiver 35.

With the valve 30 open, compressed helium flowing through the bypass line 31 is cooled in the heat exchangers 33 and 38 by countercurrent heat exchange with the expanded helium returning to the receiver 35, and also by its passage through the pre-cooler units 21 and 23 which are chilled to about 100°K and 20°K respectively. The relatively large rate of flow of helium through this route, via the valve 30, enables the temperature of the expansion block 43 to be reduced relatively quickly to a level at which the J-T effect is efficient and flow rate through the valve 44 aproaches its designed value. Closure of the valve 30 then prevents further flow through the bypass route, and

subsequent flow of high-pressure helium from the line 28 is through all three heat exchangers 33, 38 and 41, as well as through the two pre-cooler units 20 and 22, whereafter the expansion of the helium through the expansion valve or nozzle 44 provides the final cooling down to about 4°K. In this final, operating, condition of the apparatus there will be a substantial temperature difference between the expansion block 43 and the pre-cooler unit 23, between which the final section 31b of the now-inoperative bypass line extends; but it should be noted that undesired thermal leakage along the section 31b can be made satisfactorily small because section 31b will usually be a fine tube of small cross-section and can be of substantial length.

A practical embodiment of an assembly constituting the major part of the right-hand side of Figure 1 is shown in Figure 2, in which the same reference numerals are used as for the corresponding elements in Figure 1. As shown in Figure 2, the larger- and smaller-diameter sections 15 and 16 of the stepped cylinder of the displacer unit 14 of the Stirling-cycle refrigerator constitute a central spine around which the assembly is built. The collar 18, mounted on the shoulder between the sections 15 and 16, has two apertures in which the pre-cooler units 20 and 21 respectively are received as interference fits and thereby located; and the pre-cooler units 22 and 23 are similarly located as interference fits in apertures in the collar 19 which is secured on the free upper end of the section 16. Also mounted on the upper end of the section 16 are two pillars 46 of a good thermal insulating material, on the upper ends of which is mounted a thermally conductive support 47 on which the filter 43a and the Joule-Thomson expansion block 43 are secured in thermal contact with the support and thus with one another.

The three heat exchangers 33, 38 and 41 in this embodiment are all, as shown in Figure 2, of the coiled tube-in-tube type.

An annular mandrel 48 is secured in place round the displacer unit cylinder section 15, coaxial therewith, and the heat exchanger 33 is coiled round the mandrel, seated in a spiral

groove 49 thereof. At its upper end, the outer tube of the heat exchanger 33 is brazed into a lateral opening of the manifold 36 and thereby opens into an axial bore of the manifold. The high-pressure line 28 and bypass line 31 emerging from the end of the heat exchanger outer tube extend across the axial bore of the manifold 36 and out of the manifold through two small lateral openings, in which they are sealed by brazing, opposite the larger bore in which the end of the outer tube of the heat exchanger 33 is brazed (and thereby sealed). The emerging high-pressure line 28 and bypass line 31 are led to apertures in the upper ends of the pre-cooler units 20 and 21 respectively, in which they are brazed so as to seal those apertures whilst being communication with the interiors of the units.

The manifold 37 for the heat exchanger 38 is brazed in place on the manifold 36 and has an axial internal bore communicating with that of the manifold 36 and constituting therewith the duct 34a identified in Figure 1. The manifold 37 has a lateral opening in which the lower end of the outer tube of the heat exchanger 38 is brazed, and thereby sealed, in communication with the duct 34a. The inner tubes 28a and 31a of the heat exchanger 38, where they emerge from the lower end of its outer tube, extend across the duct 34a and emerge from the manifold 37 through two lateral openings (in which they are sealed by brazing) to be led to apertures in the lower ends of the pre-cooler units 20 and 21 respectively into which they are sealed by brazing so as to be in communication through the units 20 and 21 with the high-pressure line 28 and the bypass line 31 respectively.

The manifolds 39 and 40 are formed and connected in similar manner as the manifolds 36 and 37, so that they provide an internal duct 34b through which the outer tubes of the heat exchangers 38 and 41 are in communication with one another. The upper ends of the inner tubes 28a and 31a of the heat exchanger 38 emerge from the manifold 39 and are sealed into the lower ends of the pre-cooler units 22 and 23 respectively, and the single

inner tube 28b of the heat exchanger 41 emerges at its lower end from the manifold 40 and is sealed into the upper end of the pre-cooler unit 22. The upper end of the tube 28b emerges from the manifold 42 and is sealed into the lower end of the filter 43a, the upper end of which is connected to the Joule-Thomson expansion block 43 by the inlet line 43b which terminates, within the block 43, in the restricted orifice or valve 44 through which the Joule-Thomson expansion takes place. The bypass line extension 31b, which bypasses the heat exchanger 41, extends from the upper end of the pre-cooler unit 23, is led past the filter 43a (in good thermal contact with it so as to cool it) and opens into the upper end of the Joule-Thomson block 43 adjacent the valve 44 but without itself having any comparable constriction.

The outlet duct 34c from the base of the block 43 leads to the load (45 in Figure 1, but not shown in Figure 2) which is to be cooled cryogenically, and the return duct 34c' from the load communicates through the manifold 42 with the interior of the outer tube of the heat exchanger 41. The ducts 34c and 34c' are preferably not in direct thermal contact, but are mechanically located relative to one another by a spacer member 50, which supports the weight of the heat exchanger 41.

It will be seen that the assembly of the heat exchangers 33, 38 and 41 together with the manifolds 36, 37, 39, 40 and 42 forms an integrated structure which is supported at its upper end by the spacer member 50 and at its lower end by the mandrel 48 but which is otherwise out of physical and thermal contact with the remainder of the apparatus apart from the connections of the ends of the heat-exchanger inner tubes to the pre-cooler units 20, 21, 22 and 23. This arrangement is effective to minimise unwanted heat leakage between the heat exchangers and other parts of the apparatus. The desired heat transfers within the pre-cooler units are maximised by providing them with a gas-permeable filling, such as the illustrated filling 20a of the unit 20, which has high thermal conductivity and is in good thermal contact with the walls of the pre-cooler unit and therethrough

with the cold collar 18 or 19 respectively. The filling 20a may be in the form, for example, of a stack of circular discs cut from a sheet of metal gauze, or may be a strip of such gauze wound into a roll. The filter 43a may be provided with a similar filling to act as a filter element, and a similar filling may also be provided in the expansion block 43 to maximise thermal contact with the cold expanded gas issuing from the expansion nozzle 44.

As suggested earlier, the provision of the valve 30, remote from cryogenic conditions, to control the flow of helium through the pre-cooler units 21 and 23 and thence to the expansion block 43 to effect cryogenic cooling thereof in the apparatus illustrated in Figures 1 and 2 may be seen as one aspect or instance of the invention. Another embodiment of the invention, in its broader aspect as referred to above, is illustrated in Figure 3 and will now be described with reference thereto.

As shown in Figure 3, a source 55 of cryogenic cooling is represented by a Stirling-cycle refrigerator, and an item 56 is to be cooled by it, under control of a valve which is not, itself, to be subjected to the cryogenic conditions. There is therefore provided a circulating pump 57 with one-way inlet and outlet valves, for providing a flow of fluid through a supply line 58 to a first heat exchanger 59 in which it is cooled by the cryogenic cooling source 55 and thereafter to a second heat exchanger 60 in which it is in heat exchanging relationship with the item 56 which is to be cooled. A return line 61 for flow of the fluid from the heat exchanger 60 back to the pump 57 is also provided, as is a third heat exchanger 62 in which the return line 61 is in heat-exchanging relationship with the supply line 58 between the pump 57 and the first heat exchanger 59. Between the pump 57 and the third heat exchanger 62 there is provided (in the supply line 58 as illustrated, though it might equally well be in the return line 61) a valve 63 by which fluid flow through the supply line to the heat exchanger 59, and from it to the heat exchanger 60, can be controlled. The circuit just described may

be one of a plurality of such circuits, all supplied by the pump 57 : thus a second such circuit, controlled by a valve 63' and including a heat exchanger 62', may be provided for cooling the item 56 by means of a heat exchanger 60' receiving cooled fluid from a heat exchanger 59' which is cooled by a second source 55' of cryogenic cooling.

With the pump 57 operating, opening the valve 63 causes fluid to flow through the heat exchanger 59 and be cooled by the cooling source 55, and thereafter to cool the item 56 through the heat exchanger 60. The heat exchanger 62, which may be of tube-in-tube type, operates to minimise the unwanted heat load on the cooling source 55. If the source 55 should fail, closing the valve 63 effectively isolates it from the item 56; and opening of another valve, such as the valve 63', enables cooling of the item 56 to be continued by an alternative cooling source, such as the source 55', in one of the alternative circuits. Alternatively, in normal operation the item 56 may be cooled simultaneously by a plurality of cooling sources such as the source 55, with a plurality of the valves such as the valve 63 being normally open. In that case if one of the cooling sources fails it may be isolated from the item 56 by closing the corresponding valve, with the result that the failed cooling source imposes minimum heat loading on the item 56.

CLAIMS

1. Cooling means comprising a source of flow of a fluid, a supply line for supplying fluid from said source to a first heat exchanger, where it is cooled by a source of cryogenic cooling, and thereafter to a second heat exchanger where it is in heat-exchanging relationship with an item to be cooled by the cryogenic cooling source, and a return line for return flow of the fluid from the second heat exchanger to the fluid flow source, the return line and the supply line between the fluid flow source and the first heat exchanger being in heat exchange relationship with one another in a third heat exchanger, characterised in that between the fluid flow source and the third heat exchanger there is included in the supply line or the return line a control valve whereby the flow of fluid through the supply line and from the first to the second heat exchanger can be controlled.

2. Cooling means as claimed in Claim 1, characterised in that the control valve can be closed to prevent flow of fluid through the supply line from the first to the second heat exchanger.

3. Cooling means as claimed in Claim 1, having the said control valve included in the said supply line and characterised by having in parallel with the latter through the third heat exchanger (in heat exchanging relationship with the return line) and through the first heat exchanger (to be cooled by the cryogenic cooling source) a further supply line connected to supply fluid from the fluid source to the second heat exchanger, the second heat exchanger constituting a Joule-Thomson expansion block and the further supply line opening thereinto through an inlet constituted as a flow-restricting expansion valve therefor.

4. Cooling means as claimed in Claim 3, characterised in that the return line constitutes a fluid outlet from the Joule-Thomson expansion block and the fluid supply line having the said control valve connected in it opens into the expansion block through a less restricting inlet than that provided for the said further supply line, whereby fluid flow into the expansion block is

preferentially through the supply line having the control valve connected in it or through the further supply line, respectively, according as the control valve is open or closed.

5. A multi-stage cryogenic cooling apparatus having a closed-loop Joule-Thomson expansion stage and at least one pre-cooler stage, the Joule-Thomson stage comprising a gas compressor, a Joule-Thomson expansion block (having an inlet arranged to receive high pressure gas via a high-pressure line from the compressor and constituted as a flow-restricting expansion valve therefor and an outlet connected to the compressor via a low-pressure return line), and a Joule-Thomson stage heat exchanger in which the high-pressure line and the low-pressure return line are in heat-exchanging relationship, and the pre-cooler stage being arranged to pre-cool gas in the high-pressure line before it enters the Joule-Thomson stage heat exchanger, characterised in that the high-pressure gas line of the Joule-Thomson stage is provided, upstream of its interaction with the pre-cooler stage, with a branch leading through a bypass valve (when open) to a bypass line which opens into the expansion block and offers a less constricted gas route than the flow-restricting expansion valve, the pre-cooler stage being arranged to cool gas flowing in the bypass line, downstream of the bypass valve, before it reaches the expansion block, and the bypass line then leading direct from the pre-cooler stage to the expansion block without passing through the Joule-Thomson stage heat exchanger.

6. Cryogenic cooling apparatus as claimed in Claim 5, characterised in that the pre-cooler stage comprises respective heat exchangers in which gas in the high-pressure line and in the bypass line is cooled by means of a Stirling-cycle refrigerator.

7. Cooling means substantially as described herein with reference to Figures 1 and 2, or Figure 3, of the accompanying drawings.

8. Cryogenic cooling apparatus substantially as described herein with reference to Figures 1 and 2 of the accompanying drawings.

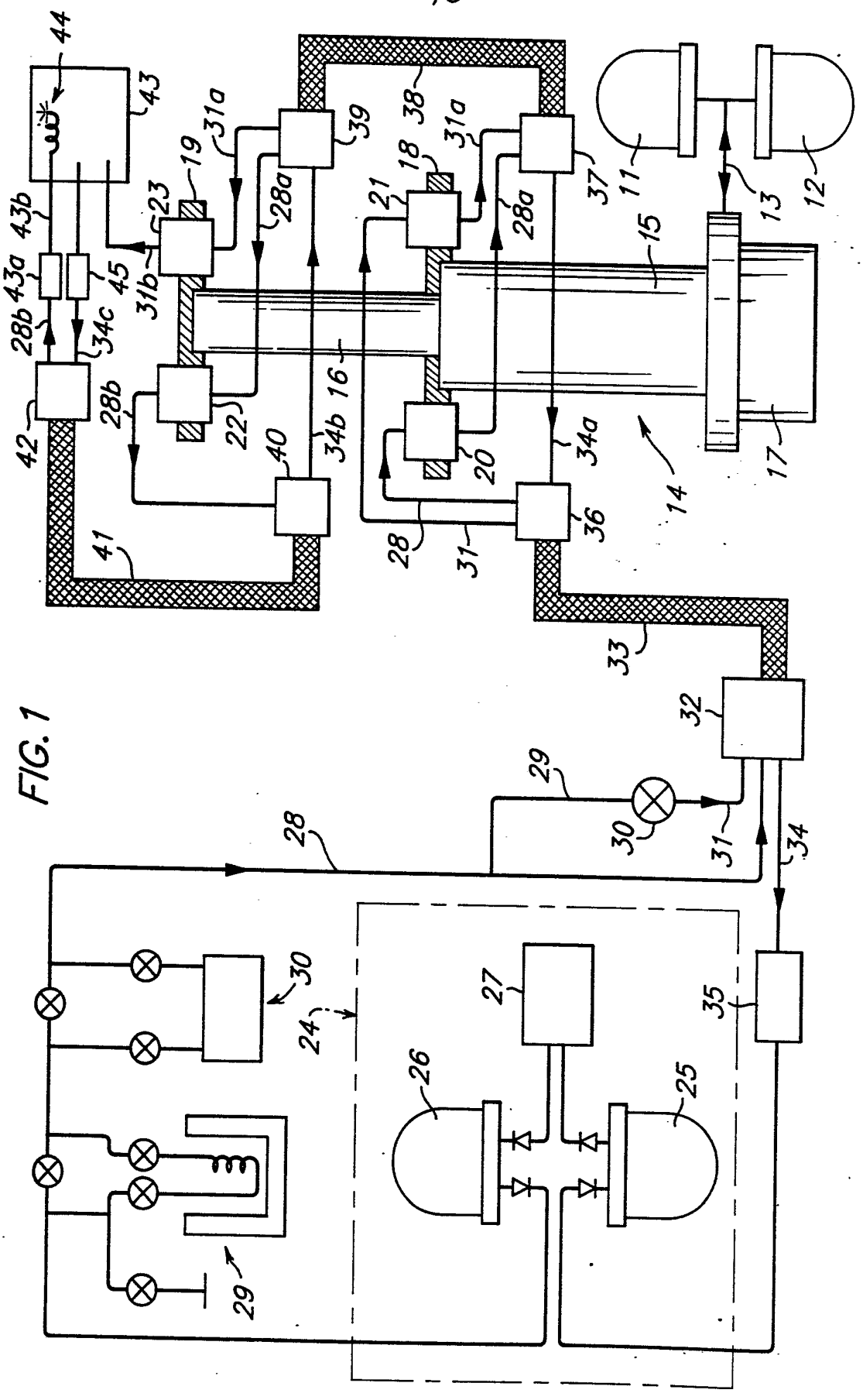
44
43
43b
43a
45
28b
34c
42
41
23
19
31a
31b
28a
39
38
18
21
37
11
12
13
15
16
22
40
34b
20
34a
14
17
28
31
36
33
32
29
30
34
35
24
27
26
25

FIG. 1

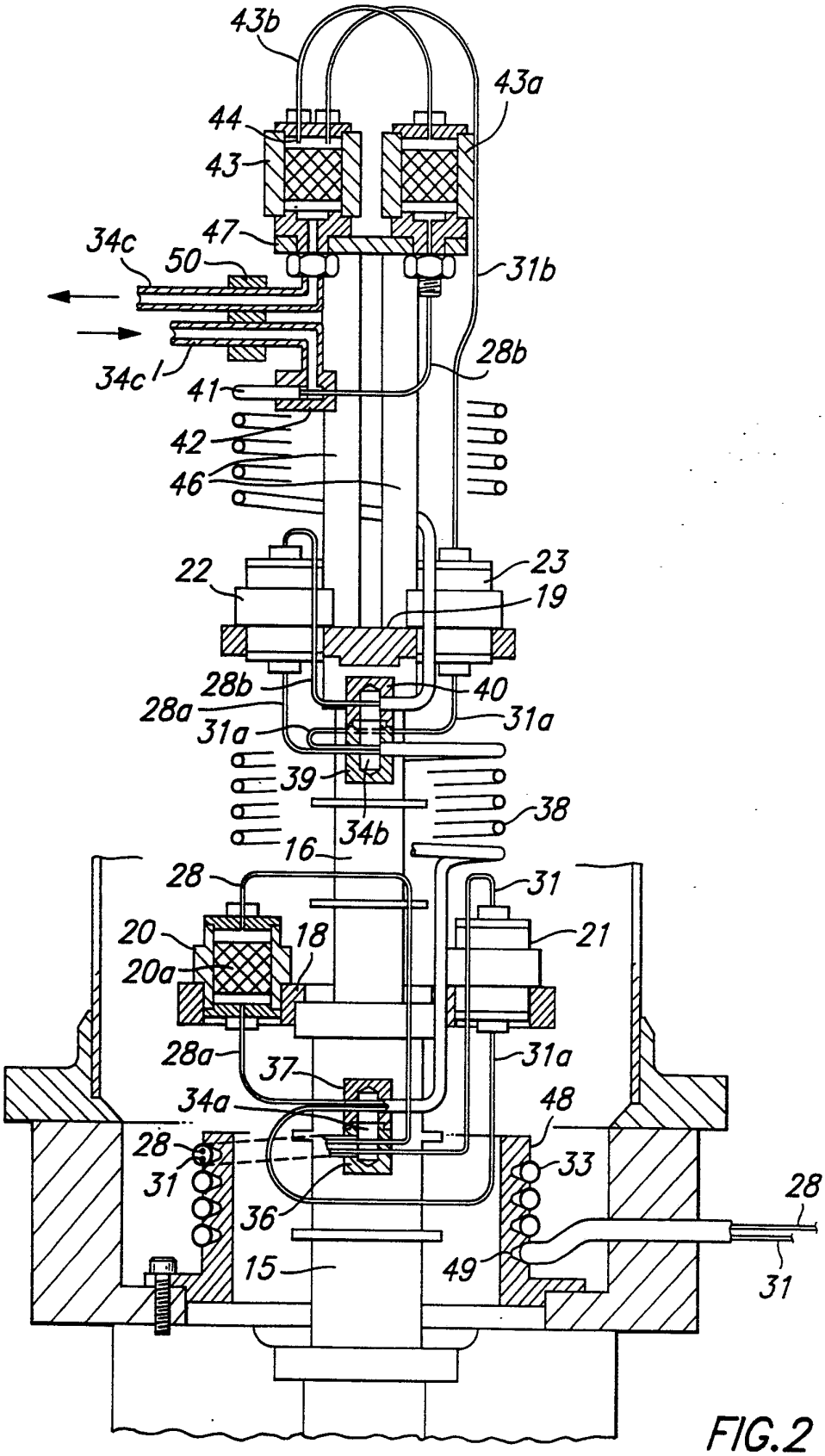
43b
43a
44
43
47
34c
50
31b
28b
34c
41
42
46
22
23
19
28b
40
28a
31a
31a
39
38
34b
16
28
31
20
18
21
20a
28a
37
31a
34a
48
28
33
31
36
28
15
49
31

FIG.2

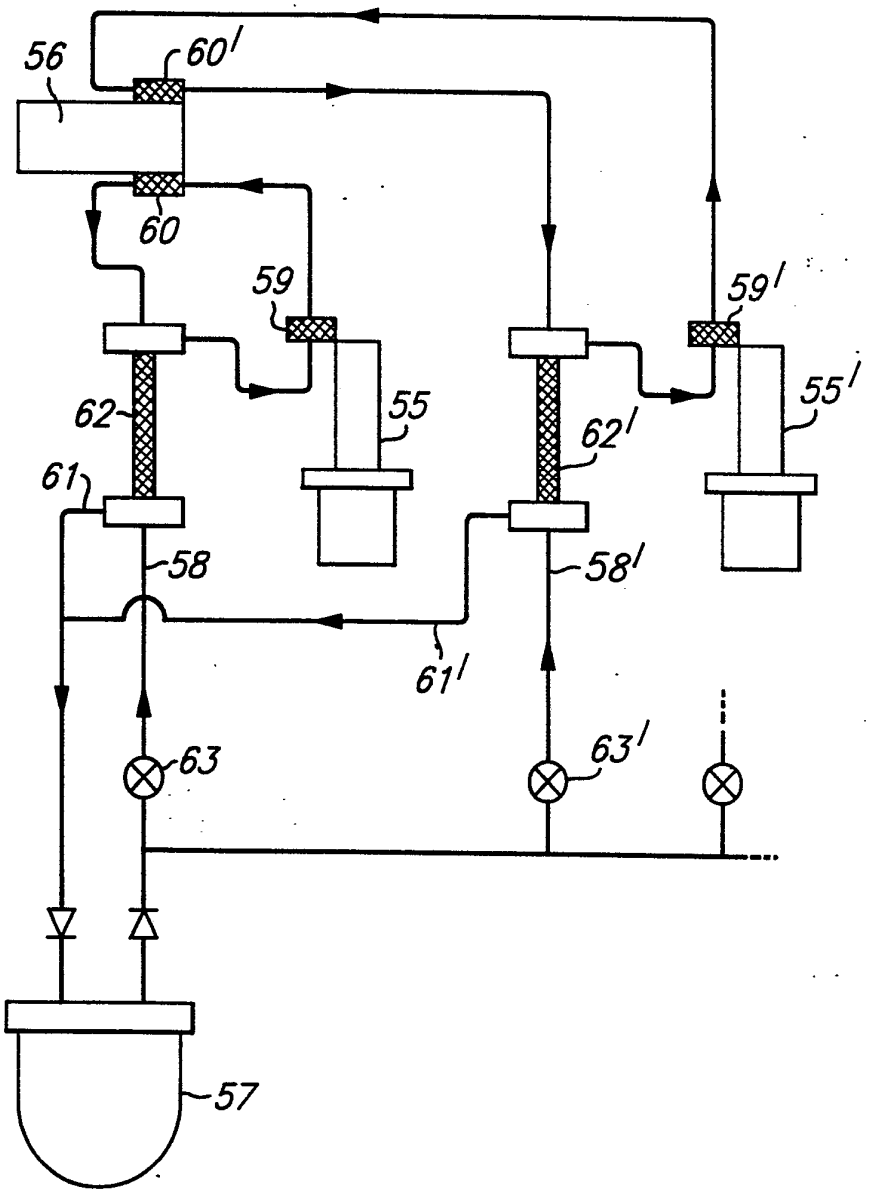

FIG.3

INTERNATIONAL SEARCH REPORT

International Application No PCT/GB 91/00311

I. CLASSIFICATION OF SUBJECT MATTER (if several classification symbols apply, indicate all) [6]

According to International Patent Classification (IPC) or to both National Classification and IPC

IPC[5]: F 25 B 9/00, F 25 D 17/02

II. FIELDS SEARCHED

Minimum Documentation Searched [7]

Classification System	Classification Symbols
IPC[5]	F 25 B, F 25 D

Documentation Searched other than Minimum Documentation to the Extent that such Documents are Included in the Fields Searched [8]

III. DOCUMENTS CONSIDERED TO BE RELEVANT [9]

Category *	Citation of Document, [11] with indication, where appropriate, of the relevant passages [12]	Relevant to Claim No. [13]
X	Proceedings of The 3rd European Symposium on Space Thermal Control & Life Support Systems, 3-6 October 1988, (Noordwijk, NL), T.W. Bradshaw et al.: "A 4-K mechanical refrigerator for space applications", pages 393-397 see pages 395-396; figures 4,5	1,2
A	cited in the application	3-6

X	US, A, 4840043 (SAKITANI) 20 June 1989 see column 4, line 35 - column 9, line 45; figure 1	1,2
A		5,6

X	US, A, 3656313 (LOW) 18 April 1972 see column 2, line 42 - column 4, line 47; figures 1-2	1,2
A	--- ./.	5,6

* Special categories of cited documents: [10]

"A" document defining the general state of the art which is not considered to be of particular relevance

"E" earlier document but published on or after the international filing date

"L" document which may throw doubts on priority claim(s) or which is cited to establish the publication date of another citation or other special reason (as specified)

"O" document referring to an oral disclosure, use, exhibition or other means

"P" document published prior to the international filing date but later than the priority date claimed

"T" later document published after the international filing date or priority date and not in conflict with the application but cited to understand the principle or theory underlying the invention

"X" document of particular relevance; the claimed invention cannot be considered novel or cannot be considered to involve an inventive step

"Y" document of particular relevance; the claimed invention cannot be considered to involve an inventive step when the document is combined with one or more other such documents, such combination being obvious to a person skilled in the art.

"&" document member of the same patent family

IV. CERTIFICATION

Date of the Actual Completion of the International Search	Date of Mailing of this International Search Report
6th June 1991	17. 07. 91
International Searching Authority	**Signature of Authorized Officer**
EUROPEAN PATENT OFFICE	M. PEIS M. Peis

III. DOCUMENTS CONSIDERED TO BE RELEVANT (CONTINUED FROM THE SECOND SHEET)

Category *	Citation of Document, ** with indication, where appropriate, of the relevant passages	Relevant to Claim No.
A	GB, A, 1290377 (SULZER BROTHERS) 27 September 1972 see page 2, line 92 - page 4, line 110; figure	1-6
A	US, A, 3415077 (COLLINS) 10 December 1968 see column 3, line 32 - column 8, line 71; figures 1-6	1-6
A	US, A, 3125863 (HOOD) 24 March 1964 see column 2, line 16 - column 3, line 46; figure	1-3,5,6
A	US, A, 4077231 (FLETCHER) 7 March 1978 see column 2, line 46 - column 5, line 5; figures 1-2	1,2
A	GB, A, 557093 (HALL) 3 November 1943	
A	US, A, 3375675 (TREPP) 2 April 1968	
A	US, A, 1829096 (KRAMER) 27 October 1931	
A	GB, A, 1417110 (BOC INTERNATIONAL) 10 December 1975	
A	GB, A, 2149901 (AISIN SEIKI) 19 June 1985	

ANNEX TO THE INTERNATIONAL SEARCH REPORT ON INTERNATIONAL PATENT APPLICATION NO. GB 9100311 SA 45076

This annex lists the patent family members relating to the patent documents cited in the above-mentioned international search report. The members are as contained in the European Patent Office EDP file on 12/07/91
The European Patent Office is in no way liable for these particulars which are merely given for the purpose of information.

Patent document cited in search report	Publication date	Patent family member(s)	Publication date
US-A- 4840043	20-06-89	JP-A- 62268963	21-11-87
		JP-A- 62268964	21-11-87
		US-A- 4951471	28-08-90
US-A- 3656313	18-04-72	None	
GB-A- 1290377	27-09-72	CH-A- 501321	31-12-70
		DE-A,B 1903643	10-09-70
		FR-A- 2026570	18-09-70
		NL-A- 6901584	23-06-70
		US-A- 3611740	12-10-71
US-A- 3415077		DE-A,B,C 1601061	18-06-70
		GB-A- 1217236	31-12-70
US-A- 3125863		US-A- 3269137	
US-A- 4077231	07-03-78	None	
GB-A- 557093		None	
US-A- 3375675		None	
US-A- 1829096		None	
GB-A- 1417110	10-12-75	AU-A- 4937572	30-05-74
GB-A- 2149901	19-06-85	JP-A- 60104899	10-06-85