US 20100252325A1

(19) United States

(12) Patent Application Publication

PORCHE

(10) Pub. No.: US 2010/0252325 A1

(43) Pub. Date: Oct. 7, 2010

(54) METHODS FOR DETERMINING MECHANICAL SPECIFIC ENERGY FOR WELLBORE OPERATIONS

(75) Inventor: MICHAEL N. PORCHE, Round Rock, TX (US)

Correspondence Address:
Conley Rose P.C
P.O.Box 3267
Houston, TX 77253 (US)

(73) Assignee: National Oilwell Varco

(21) Appl. No.: 12/416,998

(22) Filed: Apr. 2, 2009

Publication Classification

(51) Int. Cl.
E21B 47/00 (2006.01)

(52) U.S. Cl. 175/40

(57) ABSTRACT

A method for determining mechanical specific energy for a wellbore operation (e.g., drilling), the method including: measuring power input to machines used in a wellbore and producing a value for input power; calculating mechanical specific power for the operation based on the value for the input power; a computer-readable media for performing a step or steps of the method; and a computing unit for reading and performing the step or steps. This abstract is provided to comply with the rules requiring an abstract which will allow a searcher or other reader to quickly ascertain the subject matter of the technical disclosure and is submitted with the understanding that it will not be used to interpret or limit the scope or meaning of the claims, 37 C.F.R. 1.72(*b*).

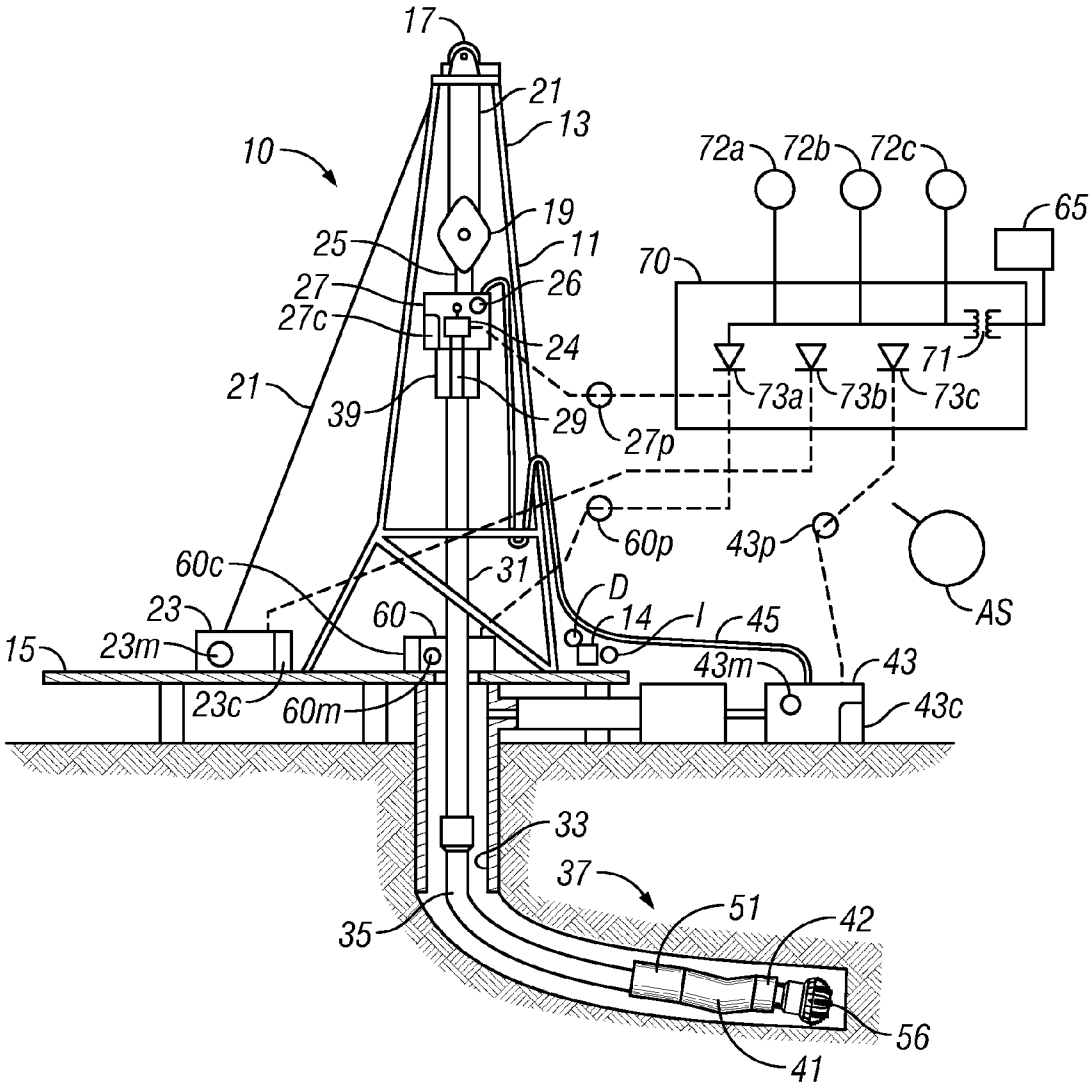

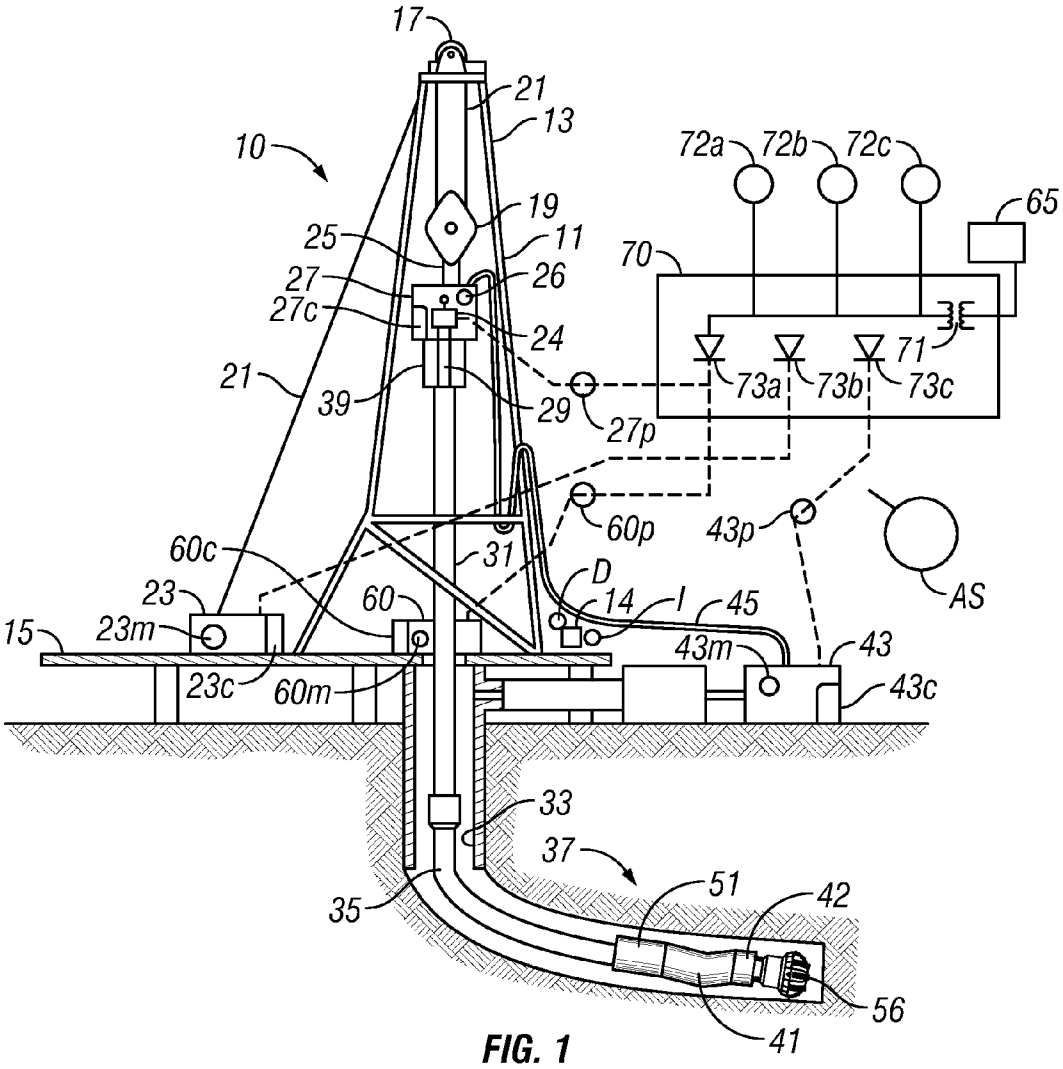
17
21
13
10
72a
72b
72c
65
19
25
11
70
27
26
27c
24
71
21
39
29
73a
73b
73c
27p
60p
43p
60c
31
D
AS
23
60
14
I
45
15
23m
43m
43
23c
60m
43c
33
37
51
42
35
56
41

FIG. 1

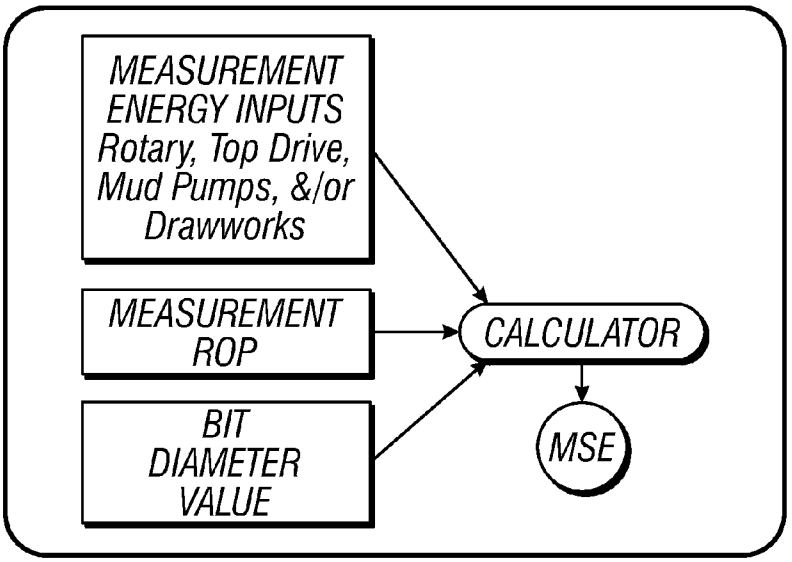
MEASUREMENT ENERGY INPUTS Rotary, Top Drive, Mud Pumps, &/or Drawworks
MEASUREMENT ROP
BIT DIAMETER VALUE
CALCULATOR
MSE

FIG. 2

Using the basic formula:

$$MSE = 3380.7*KW / (D^2*ROP)$$

If $KW_{rt/td}$
=energy used to rotate the pipe at the surface using either a rotary table, top drive, of similar device, then

$$MSE_{conventional} = (3380.7*KW_{rt/td})) / (D^2*ROP)$$

If using a downhole motor and
$\Delta_{PumpKW} = KW_{on\_bottom} - KW_{off\_bottom}$
=energy used to pump circulating fluid when bit is on bottom minus the energy used to circulate same when bit is just off bottom, then

$$MSE_{conventional\_DH} = (3380.7*\Delta_{PumpKW}) / (D^2*ROP)$$

If $KW_{rt/td} + \Delta_{PumpKW}$
=energy used to rotate the pipe at the surface plus the energy used to rotate the bit using the mud motor, then

$$MSE_{combined} = 3380.7*(KW_{rt/td} + \Delta_{PumpKW}) / (D^2*ROP)$$

If $KW_{rt/td} + KW_{on\_bottom}$
=energy used to rotate the pipe at the surface plus total energy used to circulate the drilling fluid, then

$$MSE_{Total} = 3380.7**(KW_{rt/td} + KW_{on\_bottom}) / (D^2*ROP)$$

FIG. 3

METHODS FOR DETERMINING MECHANICAL SPECIFIC ENERGY FOR WELLBORE OPERATIONS

BACKGROUND OF THE INVENTION

[0001] 1. Field of the Invention

[0002] The present invention is directed to monitoring and controlling wellbore operations; to monitoring and controlling wellbore drilling operations in real time; and, in one particular aspect, to accomplishing these things by determining mechanical specific energy for an operation by taking into account electrical or other energy input to one or more machines used in such operations.

[0003] 2. Description of the Related Art

[0004] The prior art discloses a wide variety of systems and methods for monitoring wellbore operations and for sensing and measuring parameters related to such operations, both downhole and at the surface. The prior art also discloses a wide variety of sensors, measurement apparatuses, devices, and equipment for sensing, measuring, recording, displaying, calculating, processing, and transmitting measured values for operational parameters, including, but not limited to, weight on bit (WOB), rate of penetration (ROP), rotary speed, bit speed, top drive speed, downhole motor speed, and torque on a drillstring or on a bit.

[0005] Many systems and methods have been proposed and implemented for using such sensed and measured operational parameters to enhance, facilitate, and, in some cases, optimize operational performance and the performance of apparatuses, devices and equipment involved in such operations; including, but not limited to, drilling operations. In 1965 R. Teale proposed a model for analyzing and predicting drilling performance based on a calculation of "mechanical specific energy" in an article entitled "The Concept Of Specific Energy In Rock Drilling" [Int'l J. Rock Mech. Mining Sci. (1965) 2, 5773]. Teale has a mathematical definition ("Teale definition") of mechanical specific energy, which uses WOB (weight on bit), rig rotary speed in rpm's; torque at the bit; ROP (rate of penetration), and an area, i.e., wellbore (or bit) cross-sectional area.

[0006] In a 1992 research study, (see paper entitled "Quantifying Common Drilling Problems With Mechanical Specific Energy And A Bit-Specific Coefficient of Sliding Friction", SPE 24584, 373388), R. C. Pessier et al developed an energy balance model for drilling under hydrostatic pressure using a comparison between full scale simulator tests and field data. As key indices of drilling performance, they employed mechanical efficiency, Teale's mechanical specific energy parameter, and a bit-specific coefficient of sliding friction for bit selection and analysis. "Mechanical specific energy" was defined as work done per unit volume of rock drilled and it was assumed that the minimum specific energy required to drill is approximately equal to the compressive strength of the rock being drilled. The mechanical efficiency of drilling was then estimated by comparing actual specific energy required to drill an interval with the minimum expected specific energy needed to drill that interval. Pessier et al analyzed values of various parameters (actual specific energy, minimum specific energy, energy efficiency, and bit specific coefficient of sliding friction) with respect to ROP under different situations (e.g., different bits, different WOB's, different RPM's, different hydraulics, and under atmospheric and hydrostatic pressure). It was concluded that mechanical specific energy, mechanical efficiency, and bit specific coefficient of sliding friction provided good indicators of drilling performance and could enhance the interpretation of data for: the detection and correction of major drilling problems; analysis and optimization of drilling practices; bit selection; failure analysis; evaluation of new drilling technologies and tools; realtime monitoring and controlling of the drilling process; analysis of MWD (measurement while drilling) data; and further system developments.

[0007] In a 2002 paper, Waughman et al reported on a system and method for optimizing the bit replacement decision ["Real Time Specific Energy Monitoring Reveals Drilling Inefficiency and Enhances the Understanding of When to Pull Worn PDC Bits", IADC/SPE 74520, 2002, 114]. The system involved measuring the mechanical energy input at the drill rig floor, calculating the drilling specific energy, checking current formation type via realtime downhole gamma ray readings, comparing the specific energy with the benchmark new bit specific energy, and then using these values to assess the bit's state. Success of the system was reported for synthetic based mud systems where bit balling does not mask bit dull condition. The process worked in water-base drilling fluids that had replaced earlier synthetic muds because both balled-new bits and dull bits exhibit similar levels of inefficiency.

[0008] In general, certain prior art systems and methods use calculations of mechanical specific energy based on sensed and measured values of drilling parameters. Data is often obtained from locations at the bit. For example, torque and rotational speed (rpm's) can be measured at various locations, e.g. downhole or at the surface, and the measurement, from whichever location, is then used.

[0009] U.S. Pat. No. 7,243,735, co-owned with the present invention, discloses methods for wellbore operations with a wellbore system, the methods including: acquiring with sensor systems data corresponding to a plurality of parameters, the data indicative of values for each parameter of the plurality of parameters, each parameter corresponding to part of the wellbore system; based on said data, calculating a mechanical specific energy value for each of a plurality of mechanical specific energies each related to a mechanical specific energy for a part of the wellbore system; and monitoring the value of each of the mechanical specific energies, in one aspect, in real time. Systems and methods are disclosed for determining localized differentiated mechanical specific energy parameters: surface mechanical specific energy; drillstring mechanical specific energy; and bit (or mill or other apparatus) mechanical specific energy. The patent also discloses a method for a wellbore operation with a wellbore system, the method including: acquiring with sensor systems data corresponding to a plurality of parameters, the data indicative of values for each parameter of the plurality of parameters, each parameter corresponding to part of the wellbore system; based on the data, calculating a mechanical specific energy value for each of a plurality of mechanical specific energies each related to a mechanical specific energy for a part of the wellbore system; monitoring the value of each of the mechanical specific energies; and wherein the wellbore operation is an operation with a rotating bit and values for the mechanical specific energies are calculated according to the equation for Teale's definition of mechanical specific energy.

[0010] In known methods for calculating mechanical specific energy, only the mechanical components are been taken into account. Certain known methods for calculating mechanical specific energy require a relatively large amount

of data and, sometimes, calibration and re-calibration of weight on bit, bit RPM, bit torque and rate of penetration. Actual bit rotational speeds and torques can frequently be difficult to determine precisely and accurately. This can occur when using a downhole motor or turbine to rotate a bit. Certain known methods do not take into account the actual energy used on a rig to drill a wellbore.

BRIEF SUMMARY OF THE INVENTION

[0011] The present invention discloses, in certain aspects, methods for determining mechanical specific energy for a wellbore operation, e.g., a drilling operation, milling, reaming, etc., which takes into account the energy (power) input to machines which are involved in the operation, e.g. for rotation of a drill bit, mill, or reamer, etc. In certain aspects, this includes energy input to a top drive, or a rotary table, and/or mud pumps.

[0012] The present invention discloses, in certain embodiments, methods for determining the mechanical specific energy (in one aspect, in real time) for a wellbore operation without using values for certain measured parameters, e.g., drilling or milling or reaming parameters, but rather which use measurements of values of energy (e.g. electrical or hydraulic) input into equipment involved in an operation. Often in drilling or other operations utilizing downhole mud motors, there are no sensors, e.g. for bit torque or RPM. Further, even in some existing conventional operations without downhole motors, surface measurements, e.g. of speed and torque, can vary considerably from the values at the bit.

[0013] The present invention, in certain aspects, discloses a method for determining mechanical specific energy for a wellbore operation (e.g. drilling, milling, reaming), the method including: measuring power input to machines used in a wellbore operation and producing a value for input power, and calculating mechanical specific energy for the operation based on the value for the input power. The present invention also discloses a computer-readable media having computer executable instructions for a method according to the present invention, the computer-executable instructions performing a step or steps of the method.

[0014] The present invention, in certain aspects, discloses a computing unit configured to read and perform the computer-executable instructions on computer-readable media.

[0015] The present invention discloses, in certain aspects, a method wherein Mechanical Specific Energy, MSE, is calculated according to the equation

$$\mathrm{MSE}=(r)(\mathrm{Power})/(D^2)(\mathrm{ROP})$$

[0016] in which "r" is a constant for converting units of power to units of MSE; "Power" is energy input to the machines; "D" is diameter of a bit used for the drilling; and "ROP" is rate of penetration of the bit into a formation being drilled. This calculating can be done in real time.

[0017] In addition to specific objects stated herein for at least certain preferred embodiments of the invention (but not necessarily for all embodiments of the present invention), other objects and purposes will be readily apparent to one of skill in this art who has the benefit of this invention's teachings and disclosures. It is, therefore, an object of at least certain preferred embodiments of the present invention to provide new, unique, useful, and non-obvious systems and methods of their use all of which are not anticipated by, rendered obvious by, suggested by, or even implied by any of the prior art, either alone or in any possible legal combination.

[0018] Accordingly, the present invention includes features and advantages which are believed to enable it to advance wellbore operations monitoring and control technology. Characteristics and advantages of the present invention described above and additional features and benefits will be readily apparent to those skilled in the art upon consideration of the following description of preferred embodiments and referring to the accompanying drawings.

[0019] Certain embodiments of this invention are not limited to any particular individual feature disclosed here, but include combinations of them distinguished from the prior art in their structures, functions, and/or results achieved. Features of the invention have been broadly described so that the detailed descriptions of embodiments preferred at the time of filing for this patent that follow may be better understood, and in order that the contributions of this invention to the arts may be better appreciated. There are, of course, additional aspects of the invention described below and which may be included in the subject matter of the claims to this invention. Those skilled in the art who have the benefit of this invention, its teachings, and suggestions will appreciate that the conceptions of this disclosure may be used as a creative basis for designing other structures, methods and systems for carrying out and practicing the present invention. The claims of this invention are to be read to include any legally equivalent devices or methods which do not depart from the spirit and scope of the present invention.

[0020] What follows are some of, but not all, the objects of this invention. In addition to the specific objects stated below for at least certain embodiments of the invention, other objects and purposes will be readily apparent to one of skill in this art who has the benefit of this invention's teachings and disclosures. It is, therefore, an object of at least certain embodiments of the present invention to provide the embodiments and aspects listed above and:

[0021] New, useful, unique, efficient, non-obvious methods for accurately determining the mechanical specific energy for a wellbore operation, e.g. a drilling, milling, or reaming operation; and

[0022] Such methods which employ values for electrical energy supplied to machines involved in the operation, e.g. in rotating a drill bit to drill a wellbore, a mill, or a reamer;

[0023] Such methods which do not use a variety of directly measured parameters to calculate mechanical specific energy, e.g. but not limited to, drilling parameters; and

[0024] Such methods that take into account the energy supplied to mud pumps used in pumping drilling fluid for a drilling operation and/or for driving a downhole motor that rotates a drill bit.

[0025] The present invention recognizes and addresses the problems and needs in this area and provides a solution to those problems and a satisfactory meeting of those needs in its various possible embodiments and equivalents thereof. To one of skill in this art who has the benefits of this invention's realizations, teachings, disclosures, and suggestions, various purposes and advantages will be appreciated from the following description of preferred embodiments, given for the purpose of disclosure, when taken in conjunction with the accompanying drawings. The detail in these descriptions is not intended to thwart this patent's object to claim this invention no matter how others may later attempt to disguise it by variations in form, changes, or additions of further improvements.

[0026] The Abstract that is part hereof is to enable the U.S. Patent and Trademark Office and the public generally, and scientists, engineers, researchers, and practitioners in the art who are not familiar with patent terms or legal terms of phraseology to determine quickly, from a cursory inspection or review the nature and general area of the disclosure of this invention. The Abstract is neither intended to define the invention, which is done by the claims, nor is it intended to be limiting of the scope of the invention or of the claims in any way.

[0027] It will be understood that the various embodiments of the present invention may include one, some, or all of the disclosed, described, and/or enumerated improvements and/or technical advantages and/or elements in claims to this invention.

[0028] Certain aspects, certain embodiments, and certain preferable features of the invention are set out herein. Any combination of aspects or features shown in any aspect or embodiment can be used except where such aspects or features are mutually exclusive.

BRIEF DESCRIPTION OF THE SEVERAL VIEWS OF THE DRAWINGS

[0029] A more particular description of embodiments of the invention briefly summarized above may be had by references to the embodiments which are shown in the drawings which form a part of this specification. These drawings illustrate embodiments preferred at the time of filing for this patent and are not to be used to improperly limit the scope of the invention which may have other equally effective or legally equivalent embodiments.

[0030] FIG. **1** is a schematic view of a system which can employ methods according to the present invention.

[0031] FIG. **2** is a schematic view of steps of a method according to the present invention.

[0032] FIG. **3** is a graphic illustration of methods according to the present invention.

[0033] Certain embodiments of the invention are shown in the above-identified figures and described in detail below. Various aspects and features of embodiments of the invention are described below and some are set out in the dependent claims. Any combination of aspects and/or features described below or shown in the dependent claims can be used except where such aspects and/or features are mutually exclusive. It should be understood that the appended drawings and description herein are of certain embodiments and are not intended to limit the invention or the appended claims. On the contrary, the intention is to cover all modifications, equivalents and alternatives falling within the spirit and scope of the invention as defined by the appended claims. In showing and describing these embodiments, like or identical reference numerals are used to identify common or similar elements. The figures are not necessarily to scale and certain features and certain views of the figures may be shown exaggerated in scale or in schematic in the interest of clarity and conciseness.

[0034] As used herein and throughout all the various portions (and headings) of this patent, the terms "invention", "present invention" and variations thereof mean one or more embodiments, and are not intended to mean the claimed invention of any particular appended claim(s) or all of the appended claims. Accordingly, the subject or topic of each such reference is not automatically or necessarily part of, or required by, any particular claim(s) merely because of such reference. So long as they are not mutually exclusive or contradictory any aspect or feature or combination of aspects or features of any embodiment disclosed herein may be used in any other embodiment disclosed herein.

DETAILED DESCRIPTION OF THE INVENTION

[0035] In one particular embodiment of a system and method according to the present invention, as shown in FIG. **1**, a system **10** has a drilling rig **11** depicted schematically as a land rig, but other rigs (e.g., offshore rigs and platforms, jack-up rigs, semi-submersibles, drill ships, and the like) are within the scope of the present invention. In conjunction with an operator interface, e.g. an interface I, a control system **14** controls operations of the rig. The rig **11** includes a derrick **13** that is supported on the ground above a rig floor **15**. The rig **11** includes lifting apparatus, a crown block **17** mounted to derrick **13** and a traveling block **19** interconnected by a cable **21** that is driven by a drawworks **23** (with an electrically powered motor or motors **23***m*) to control the upward and downward movement of the traveling block **19**. Traveling block **19** carries a hook **25** from which is suspended a top drive system **27** which includes a variable frequency drive controller **26**, a motor (or motors) **24**, electrically powered, and a drive shaft **29**. A power swivel may be used instead of a top drive. The top drive system **27** rotates a drillstring **31** to which the drive shaft **29** is connected in a wellbore **33**. The top drive system **27** can be operated to rotate the drillstring **31** in either direction. A rotary system **60** has a motor **60***m* and a rotary table and kelly used to rotate the drillstring. In one aspect, the drillstring **31** is coupled to the top drive system **27** through an instrumented sub **39** which includes sensors that provide drilling parameter information.

[0036] The drillstring **31** may be any typical drillstring and, in one aspect, includes a plurality of interconnected sections of drill pipe **35** a bottom hole assembly (BHA) **37**, which can include stabilizers, drill collars, and/or an apparatus or device, in one aspect, a suite of measurement while drilling (MWD) instruments including a steering tool **51** to provide bit face angle information. Optionally a bent sub **41** is used with a downhole or mud motor **42** and a rotatable member **56** which, in one aspect, is a bit, connected to the BHA **37**. The face angle of the bit **56** can be controlled in azimuth and pitch during drilling. Optionally, the rotatable member **56** is replaced with a mill, reamer, or reaming bit.

[0037] Drilling fluid is delivered to the drillstring **31** by mud pumps **43** which have an electrically-powered motor or motors **43***m* through a mud hose **45**. The drillstring **31** is rotated within bore hole **33** by the top drive system **27** (and/or by the rotary system **60**; and/or by the mud motor **42**). During sliding drilling, the drillstring **31** is held in place by top drive system **27** while the bit **56** is rotated by the mud motor **42**, which is supplied with drilling fluid by the mud pumps **43**. The driller can operate the top drive system **27** to change the face angle of the bit **56**. The cuttings produced as the bit drills into the earth are carried out of bore hole **33** by drilling mud supplied by the mud pumps **43**. Optionally, machines are hydraulically powered instead of electrically powered.

[0038] A rig power system **70** is the overall power system powered as shown by three individual engine generator sets **72***a*, **72***b*, **72***c* (sometimes called prime movers) or may be supplied energy from an alternative source as, for example, a utility distribution on a land rig or a feed from a large power generation unit for a very large offshore fixed installation. Regardless of the primary power source, individual power control is provided to equipment on the drilling rig needing

such; e.g. each of the items **23**, **27**, **43** and/or **60**, optionally, has its own single board computer **23***c*, **27***c*, **43***c* and **60***c* respectively. The single board computers **23***c*, **27***c*, **43***c* and **60***c* each have programmable media programmed so that each separate computer can control its particular tool or system. The computer is programmed to perform desired calculations. Each single board computer can control its respective tool or system. Optionally, a main control system **14** can control all rig functions and is in communication with each single board computer. In one aspect this is classified as auxiliary loads **65** which are supplied power from a transformer **71**, e.g. such things as lighting, centrifugal pumps, and hotel loads. In addition to these are drilling task specific loads, as, for example, the drawworks **23** whose motor is powered by a converter **73***b*. Other loads are the top drive **27** or the rotary table **60** whose motors **27***m* and **60***m*, respectively, are powered by a converter **73***a*. Additionally mud pumping loads consist of from one to three or more mud pumps **43** each with at least one motor **43***m*, powered by a converter **73***c*.

[0039] In one aspect power being used by either of the rotators (either the rotary table **60** or the top drive **27** and/or by the mud pumps) is monitored instantaneously. Power monitor devices **27***p*, **60***p*, and **43***p* measure the power being consumed by the top drive **27**, the rotary table **60**, or the mud pumps **43**, respectively. The system **14** may include a display D for displaying calculated MSE in real time.

[0040] FIG. **2** shows steps in a method according to the present invention for determining mechanical specific energy, MSE, expressed as energy input to a system per volume of rock drilled (or of item milled or of wellbore reamed). Electrical energy input into drilling equipment is measured ("MEASUREMENT ENERGY INPUTS"); e.g., for the motors of a rotary, top drive, mud pumps and/or a drawworks. The equipment, in one aspect, includes electric motor(s) and the mud pumps. According to the present invention, measured energy inputs can include energy in either electrical or hydraulic form; e.g. for hydraulically driven machines, e.g. hydraulically powered top drives, the fluid volume and pressure.

[0041] The energy input to the motors is determined based on the electrical power sensed and measured by power monitor devices **43***p*, **27***p*, and **60***p*.

[0042] Voltages and the amperages can be measured using, e.g. cabling or electrical bus bars to the electric motors, either AC or DC.

[0043] In some embodiments, the top drive or rotary table might be hydraulically powered, in which case the present invention would determine the power from the conventional means of multiplying flow rate and volume with appropriate scaling.

[0044] Energy input is expressed in typical energy units, e.g. in kilowatts. The rate of penetration is measured by any suitable known method and apparatus, e.g. by encoder or other means ("MEASUREMENT ROP") and expressed in feet per hour. The bit diameter ("BIT DIAMETER VALUE") is expressed in inches.

[0045] A computer or similar apparatus ("CALCULATOR") receives the various measurements, processes them and calculates the mechanical specific energy ("MSE").

[0046] For a typical top drive motor, mud pump motor, or rotary motor, the product of the voltage and amperage from their respective generators is proportional to the developed horsepower. The product of the voltage times the amperage is a number of kilowatts.

[0047] Similarly, the product of the applied voltage times the amperage for the motors of the mud pumps is a number of kilo watts. The mud pumps provide the motive fluid for a downhole mud motor with respect to which the applied voltage is proportional to the resulting bit rotational speed in rpm's and the change in amperage of the mud pump motors is proportional to the applied torque of the bit into the formation, and this is proportional to the torque of the rotating bit.

[0048] Once the energy inputs and other values are determined, the calculator calculates MSE.

[0049] In one situation, drilling conventionally with a surface rotator, i.e. a rotary table or top drive (either one or the other only, henceforth referred to as "rt/td") and with no downhole motor imparting rotation to the bit. Then with direct measurement of the top drive or rotary table power measured in KW, the formula for MSE is:

$$MSE_{conventional}=(3{,}380.7*KW_{rt/td})/(D^2*ROP)$$

[0050] In another situation, drilling is done with a downhole mud motor and "sliding", that is, the downhole mud motor is imparting all of the rotational torque to the bit and the rt/td is not spinning. Then, with direct measurement of the mud pump KW, both on-bottom and off-bottom, with the on-bottom measurement having the off-bottom subtracted from it to form a ΔPumpKW, the formulation for MSE then is:

$$\Delta_{PumpKW}=KW_{on\_bottom}-KW_{off\_bottom}$$

$$MSE_{conventional\_DH}=(3{,}380.7*\Delta_{PumpKW})/(D^2*ROP)$$

[0051] "KWoff_bottom" is the KW expended by the drilling fluid in rotating the downhole mud motor with the bit not touching, or engaged with, the bottom of the formation. "KWoff_bottom" is the KW expended by the drilling fluid in rotating the downhole mud motor with the bit engaged with the formation.

[0052] In another situation, drilling is done with both a downhole mud motor and a surface rotator (rt/td) simultaneously. Then, with direct measurement of both rotational and incremental hydraulic power used by the downhole mud motor, the formula for MSE is:

$$MSE_{combined}=(3{,}380.7*(KW_{rt/td}+\Delta_{PumpKW}))/(D^2*ROP)$$

[0053] In another situation the hydraulic power imparted to the formation by the mud pumps acting with the bit jets is taken into account. However an "MSE TOTAL" or "figure of merit" corresponding to an intrinsic definition of MSE can be of value and is determined from the measured KW's and defined as:

$$MSE_{Total}=(3{,}380.7*(KW_{rt/td}+KW_{on\_bottom}))/(D^2*ROP)$$

[0054] This MSE TOTAL takes into account the power imparted to the formation by the action of the mud pumps pumping mud through the jets. Thus, using voltage and amperage measurements, MSE is determined for a drilling operation. In certain aspects, using the same measurements of electrical energy inputs for the mud pump motors, MSE is determined for a downhole-motor drilling operation. When two or three of these drilling modes are employed together, a combined MSE taking into account energy input for each mode is determined. All of these determinations can be done without taking into account and without the need for measuring the speed of a rotary table, the speed of a top drive shaft, and the actual torque applied to a bit. The last of these methods according to the present invention also take into account

the energy input associated with energy expended through the downhole motor's fluid jets. Certain known methods do not take into account the hydraulic horsepower of mud flow across a drill bit's jets; but, since certain methods of the present invention are cognizant of the energy supplied to the mud pumps, this energy expended in the drilling operation can, according to the present invention, be considered.

[0055] FIG. **3** presents a summary of the methods according to the present invention for the various situations described above. Optionally, the methods described are used for a milling operation, a reaming operation, or for similar operations.

[0056] The present invention, therefore provides, in at least certain embodiments, a method for determining mechanical specific energy for a wellbore operation, the method including measuring power input to machines used in the operation, e.g a wellbore drilling operation and producing a value for input power, calculating mechanical specific energy for the operation based on the value for the input power. Such a method according to the present invention may have one or some (in any possible combination) of the following: wherein the wellbore operation is a drilling operation, wherein the power input is electrical power and the value for input power is a value for electrical power; wherein the power input is hydraulic power and the value for input power is a value for hydraulic power; wherein the machines include a rotator for rotating tubulars used in the wellbore operation; wherein the rotator is at least one of rotary table system, top drive system, and mud motor system; wherein measuring the power input includes measuring power for a mud pump system and power for at least one rotator for rotating tubulars used in the wellbore operation; wherein the at least one rotator is all rotators used for rotating tubulars used in the wellbore operation; wherein the wellbore operation is a wellbore drilling operation using only either a rotary table system or a top drive system and Mechanical Specific Energy, MSE, is calculated according to the equation,

$$MSE_{conventional}=(3{,}380.7*KW_{rt/td})/(D^2*ROP)$$

in which "KW" is input power measured in kilowatts; "D" is bit diameter area for the drill bit used; and "ROP" is rate of penetration of the drill bit through the formation; wherein the wellbore operation is a drilling operation using a downhole mud motor to rotate a drill bit to drill a wellbore and Mechanical Specific Energy, MSE, is calculated according to the equation,

$$\Delta_{PumpKW}=KW_{on\_bottom}-KW_{off\_bottom}$$

$$MSE_{conventional\_DH}=(3{,}380.7*\Delta_{PumpKW})/(D^2*ROP)$$

in which "KW" is input power measured in kilowatts; "D" is bit diameter area for the drill bit used; and "ROP" is rate of penetration of the drill bit through the formation, and "ΔPUMPKW" is the difference between kilowatts input to a mud pump system used in the wellbore drilling operation with the bit on-bottom ("KW on bottom"), and off-bottom of the wellbore ("KW off bottom); wherein the wellbore operation is a drilling operation using a rotator for rotating tubulars and a downhole mud motor to rotate a drill bit, and Mechanical Specific Energy, MSE, is calculated according to the equation,

$$MSE_{combined}=(3{,}380.7*(KW_{rt/td}+\Delta_{PumpKW}))/(D^2*ROP)$$

in which "KW" is input power measured in kilowatts; "D" is bit diameter area for the drill bit used; and "ROP" is rate of penetration of the drill bit through the formation, and "ΔPUMPKW" is the difference between kilowatts input to a mud pump system used in the wellbore drilling operation with the bit on-bottom ("KW on bottom"), and off-bottom of the wellbore ("KW off_bottom); wherein the wellbore operation is a drilling operation and the wellbore is being drilled with a downhole mud motor using an hydraulically powered mud pump system which inputs power to a formation being drilled via mud pumped through a drill bit being used to drill the wellbore, and Mechanical Specific Energy, MSE, is calculated according to the equation:

$$MSE_{Total}=(3{,}380.7*(KW_{rt/td}+KW_{on\_bottom}))/(D^2*ROP)$$

in which "KW" is input power measured in kilowatts; "D" is bit diameter area for the drill bit used; and "ROP" is rate of penetration of the drill bit through the formation, and KW on bottom is power input to the downhole mud motor; supply power to the machines with a rig power system; wherein the wellbore operation is a drilling operation and Mechanical Specific Energy, MSE, is calculated according to the equation:

$$MSE=(r)(Power)/(D^2)(ROP)$$

in which "r" is a constant for converting units of power to units of MSE, Power is energy input to the machines used in the operation, "D" is diameter of a bit used for the drilling; and ROP is rate of penetration of the bit into a formation being drilled; wherein said calculating is done in real time; controlling the measuring and the calculating with a control system; and/or displaying calculated MSE in real time.

[0057] The present invention therefore provides, in at least certain embodiments, a computer-readable media having computer executable instructions for a method according to the present invention, the computer-executable instructions performing a step or steps of the method.

[0058] The present invention therefore provides, in at least certain embodiments, a computing unit configured to read and perform the computer-executable instructions on computer-readable media according to the present invention.

[0059] The present invention therefore provides, in at least certain embodiments, a method wherein the wellbore operation is a wellbore drilling operation and Mechanical Specific Energy, MSE, is calculated according to the equation:

$$MSE=(r)(Power)/(D^2)(ROP)$$

in which "r" is a constant for converting units of power to units of MSE; Power is energy input to machines for a wellbore operation; "D" is diameter of a bit used for the drilling; operation (e.g. drilling); and ROP is rate of penetration of the bit into a formation being drilled (or of a mill into an item being milled or of a wellbore being reamed).

[0060] In conclusion, therefore, it is seen that the present invention and the embodiments disclosed herein and those covered by the appended claims are well adapted to carry out the objectives and obtain the ends set forth. Certain changes can be made in the subject matter without departing from the spirit and the scope of this invention. It is realized that changes are possible within the scope of this invention and it is further intended that each element or step recited in any of the following claims is to be understood as referring to the step literally and/or to all equivalent elements or steps. The following claims are intended to cover the invention as

broadly as legally possible in whatever form it may be utilized. The invention claimed herein is new and novel in accordance with 35 U.S.C. §102 and satisfies the conditions for patentability in §102. The invention claimed herein is not obvious in accordance with 35 U.S.C. §103 and satisfies the conditions for patentability in §103. This specification and the claims that follow are in accordance with the requirements of 35 U.S.C. §112. The inventors may rely on the Doctrine of Equivalents to determine and assess the scope of their invention and of the claims that follow as they may pertain to apparatus and/or methods not materially departing from, but outside of, the literal scope of the invention as set forth in the following claims. All patents and applications identified herein are incorporated fully herein for all purposes. It is the express intention of the applicant not to invoke 35 U.S.C. §112, paragraph 6 for any limitations of any of the claims herein, except for those in which the claim expressly uses the words 'means for' together with an associated function. In this patent document, the word "comprising" is used in its non-limiting sense to mean that items following the word are included, but items not specifically mentioned are not excluded. A reference to an element by the indefinite article "a" does not exclude the possibility that more than one of the element is present, unless the context clearly requires that there be one and only one of the elements.

[0061] Whereas the present invention has been described in particular relation to the drawings attached hereto, it should be understood that other and further modifications apart from those shown or suggested herein, may be made within the scope and spirit of the present invention.

What is claimed is:

1. A method for determining mechanical specific energy for a wellbore operation, the method comprising:

measuring power input to machines used in a wellbore operation and producing a value for input power,

calculating mechanical specific energy for the operation based on the value for the input power.

2. The method of claim **1** wherein the power input is electrical power and the value for input power is a value for electrical power.

3. The method of claim **1** wherein the power input is hydraulic power and the value for input power is a value for hydraulic power.

4. The method of claim **1** wherein the machines include a rotator for rotating tubulars used in the wellbore operation.

5. The method of claim **4** wherein the rotator is at least one of rotary table system, top drive system, and mud motor system.

6. The method of claim **1** wherein measuring the power input includes measuring power for a mud pump system and power for at least one rotator for rotating tubulars used in the wellbore operation.

7. The method of claim **6** wherein the at least one rotator is all rotators used for rotating tubulars used in the wellbore operation.

8. The method of claim **1** wherein the wellbore operation is a wellbore drilling operation using only either a rotary table system or a top drive system and Mechanical Specific Energy, MSE, is calculated according to the equation:

$$MSE_{conventional}=(3{,}380.7*KW_{rt/td})/(D^2*ROP)$$

in which "KW" is input power measured in kilowatts; "D" is bit diameter area for the drill bit used; and "ROP" is rate of penetration of the drill bit through the formation.

9. The method of claim **1** wherein the wellbore operation is a wellbore drilling operation using a downhole mud motor to rotate a drill bit to drill a wellbore and Mechanical Specific Energy, MSE, is calculated according to the equations:

$$\Delta_{PumpKW}=KW_{on\_bottom}-KW_{off\_bottom}$$

$$MSE_{conventional\_DH}=(3{,}380.7*\Delta_{PumpKW})/(D^2*ROP)$$

in which "KW" is input power measured in kilowatts; "D" is bit diameter area for the drill bit used; and "ROP" is rate of penetration of the drill bit through the formation, and "ΔPUMPKW" is the difference between kilowatts input to a mud pump system used in the wellbore drilling operation with the bit on-bottom ("KW on_bottom"), and off-bottom of the wellbore ("KW off_bottom).

10. The method of claim **1** wherein the wellbore operation is a wellbore drilling operation using a rotator for rotating tubulars and a downhole mud motor to rotate a drill bit, and Mechanical Specific Energy, MSE, is calculated according to the equation:

$$MSE_{combined}=(3{,}380.7*(KW_{rt/td}+\Delta_{PumpKW}))/(D^2*ROP)$$

in which "KW" is input power measured in kilowatts; "D" is bit diameter area for the drill bit used; and "ROP" is rate of penetration of the drill bit through the formation, and "ΔPUMPKW" is the difference between kilowatts input to a mud pump system used in the wellbore drilling operation with the bit on-bottom ("KW on_bottom"), and off-bottom of the wellbore ("KW off_bottom).

11. The method of claim **1** wherein the wellbore operation is a wellbore drilling operation and a wellbore is being drilled with a downhole mud motor using an hydraulically powered mud pump system which inputs power to a formation being drilled via mud pumped through a drill bit being used to drill the wellbore, and Mechanical Specific Energy, MSE, is calculated according to the equation:

$$MSE_{Total}=(3{,}380.7*(KW_{rt/td}+KW_{on\_bottom}))/(D^2*ROP)$$

in which "KW" is input power measured in kilowatts; "D" is bit diameter area for the drill bit used; and "ROP" is rate of penetration of the drill bit through the formation, and KW on bottom is power input to the downhole mud motor.

12. The method of claim **1** further comprising

supply power to the machines with a rig power system.

13. The method of claim **1** wherein the wellbore operation is a drilling operation and Mechanical Specific Energy, MSE, is calculated according to the equation,

$$MSE=(r)(Power)/(D^2)(ROP)$$

in which:

r is a constant for converting units of power to units of MSE;

Power is energy input to the machines used in the operation;

D is diameter of a bit used for the drilling; and

ROP is rate of penetration of the bit into a formation being drilled.

14. The method of claim **1** wherein said calculating is done in real time.

15. The method of claim **1** further comprising controlling the measuring and the calculating with a control system.

16. The method of claim **15** further comprising

displaying calculated MSE in real time.

17. A computer-readable media having computer executable instructions for a method as in claim **1**, the method including measuring power input to machines used in drilling a wellbore and producing a value for input power, the computer-executable instructions performing the following step:

calculating mechanical specific energy for the drilling based on a measured value for the input power.

18. A computing unit configured to read and perform the computer-executable instructions on computer-readable media as recited in claim **17**.

19. The method of claim **1** wherein the wellbore operation is a wellbore drilling operation and Mechanical Specific Energy, MSE, is calculated according to the equation,

$$MSE=(r)(Power)/(D^2)(ROP)$$

in which:

r is a constant for converting units of power to units of MSE;

Power is energy input to machines used in the operation;

D is diameter of a bit used for the drilling; and

ROP is rate of penetration of the bit into a formation being drilled.

20. The method of claim **1** wherein said calculating is done in real time.

* * * * *