June 24, 1941. M. L. BIGMAN 2,246,613

ILLUMINATED SWITCH DEVICE

Filed May 5, 1938

Fig. 1.

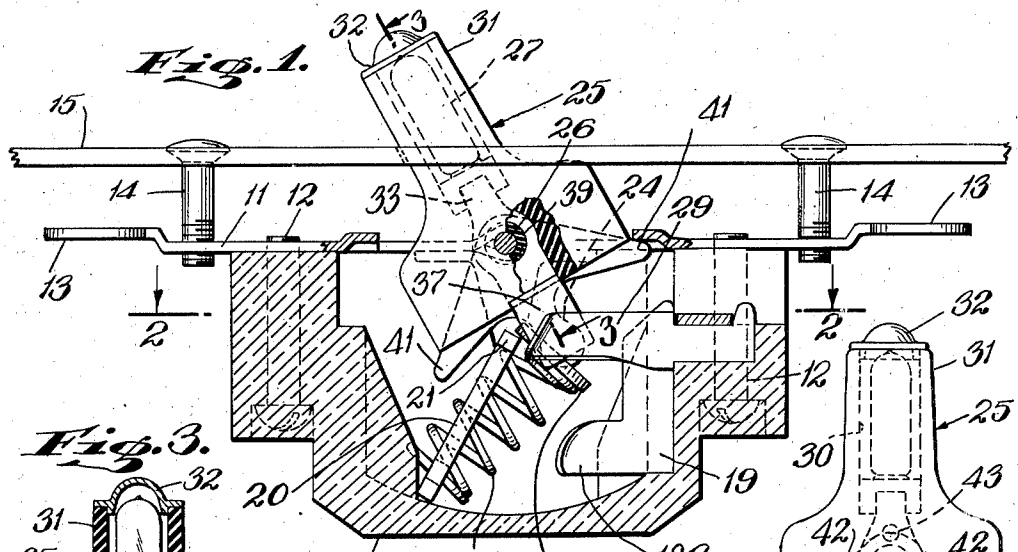

Fig. 2.

Fig. 4.

Fig. 3.

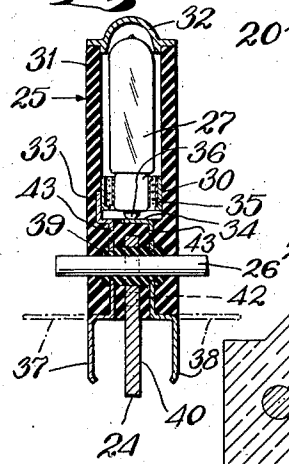

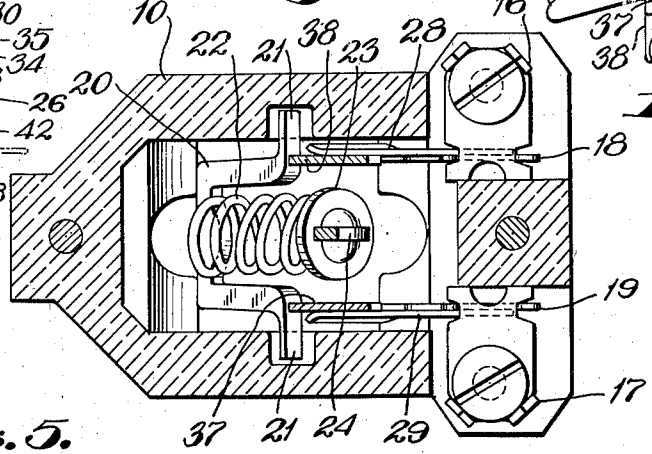

Fig. 5.

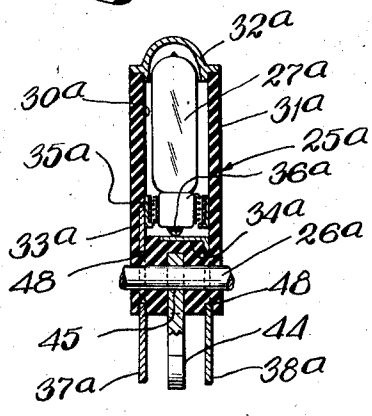

Fig. 6.

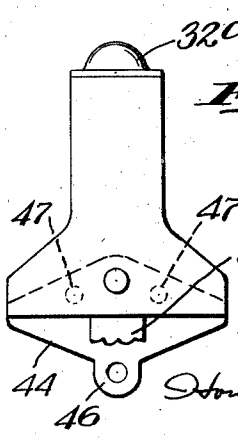

INVENTOR
MORRIS L. BIGMAN
BY
Howard C. Thompson
ATTORNEY

Patented June 24, 1941 2,246,613

UNITED STATES PATENT OFFICE

2,246,613

ILLUMINATED SWITCH DEVICE

Morris L. Bigman, Brooklyn, N. Y.

Application May 5, 1938, Serial No. 206,177

5 Claims. (Cl. 200—167)

This invention relates to switch devices particularly of the pivoted handle type; and the object of the invention is to provide means within the handle or movable switch element for illuminating the same or that part thereof which protrudes for manual engagement when the switch is in the "off" or open circuit position so as to render the switch visible in a dark room or compartment especially to indicate to those not acquainted with the room or compartment the location of the switch; a further object being to provide a switch of the character described wherein the switch element or handle is composed of a transparent or translucent material so that a neon light arranged therein, when ignited, will be visible through the wall structure of the element or handle; a further object being to provide a switch element of the character described wherein the several contact parts and mounting parts of the switch element are formed integrally with the body structure of the element by forming the latter of a die cast or molded material of the type and kind under consideration; a still further object being to provide a handle wherein a neon tube may be detachably coupled with the handle by the provision of a chamber in the handle into which the tube may be arranged in such manner as to engage the electric contacts which form a part of the handle structure; and with these and other objects in view, the invention consists in a device of the class and for the purpose specified, which is simple in construction, efficient in use, and which is constructed as hereinafter described and claimed.

The invention is fully disclosed in the following specification, of which the accompanying drawing forms a part, in which the separate parts of my improvement are designated by suitable reference characters in each of the views, and in which:

Fig. 1 is a sectional view through a switch box showing one of my improved switch elements arranged therein with part of the construction broken away and in section.

Fig. 2 is a partial section on the line 2—2 of Fig. 1.

Fig. 3 is a partial section on the line 3—3 of Fig. 1, showing the element detached.

Fig. 4 is a side view of the structure shown in Fig. 3, with part of the construction broken away.

Fig. 5 is a view similar to Fig. 3, showing a modification; and,

Fig. 6 is a side view of the structure shown in Fig. 5, with part of the structure broken away.

It will be understood that my invention which relates primarily to the structure of the switch element proper, or what is commonly termed the handle, is adapted for use in connection with switch boxes of various kinds and constructions. While in the accompanying drawing I have shown one type of box and have further illustrated one method of completing the circuit from the element to the binding posts or terminals of the box, other forms of connections may be used. Therefore, in these respects, the illustration described must be considered solely as demonstrative of one method only of carrying my invention into effect.

In Figs. 1 and 2 of the drawing, 10 represents a porcelain switch box to the upper end of which is attached the mounting bar or strip 11 by means of screws or other devices 12. The strip 11, in addition to having the conventional means for attaching the same to a support at the ends 13 thereof, also has apertures for receiving screws 14 for mounting the outer switch plate 15 in position. At opposite sides of the box 10 are binding posts or terminals 16, 17, note Fig. 2, to which are coupled spring contacts, 18, 19, which extend downwardly into the central compartment of the box and are provided with flared inner ends as indicated at 18a, note Fig. 1, so as to receive the swinging yoke 20 pivoted in recesses in the sides of the box as seen at 21, note Fig. 2, so that when the yoke or switch bar 20 is moved to the right, both contacts 18 and 19 will be engaged and the circuit through wires connected with the terminals 16 and 17 completed. Seated in the crosshead of the yoke 20 is a coil spring 22 having a cup-shaped socket 23 seating upon the upper end thereof in which the lower protruding knob 24 of a handle or switch element 25 is adapted to operate. By means of this connection the circuit closing yoke 20 is moved into operative and inoperative positions in moving the handle to the "on" and "off" positions by swinging on the pivot pin or axis 26 of said handle which is supported in connection with the sides of the mounting strip 11 in the usual manner. In fact, all of the above described construction, aside from the specific structure of the switch element or handle, which is later described, is of well known form and construction.

In illustrating one method of completing the circuit to the neon bulb 27 of the handle 25, I have shown two inwardly projecting contacts 28 and 29 which are coupled with the terminals 16 and 17 and arranged adjacent the contacts 18

and 19 but positioned in the manner illustrated in Fig. 1 of the drawing so as to engage the contacts of the switch element as later described. The handle 25 shown in Figs. 1 to 4 inclusive consists of a die cast or molded body of plastic or thermoplastic material, such for example as cellulose acetate or any other material, having translucent properties or through which light will be visible in utilizing a thickness of wall sufficient or required to perform the necessary functions of the switch element. It is not absolutely essential, however, that the body of the handle be translucent or transparent; and when an opaque body is employed, openings may be formed in opposed walls of the body in positions registering with the neon tube 27, in accordance with the teachings in my prior application, Serial No. 76,343, filed, April 25, 1936, now Patent No. 2,134,696, issued November 1, 1938. By using a molded or die cast body of this type, it will be apparent that the electric connections and other fixtures of the switch element, independent of the neon bulb, may be formed as one unitary part of the handle, the switch elements and the like constituting inserts or inlays around which the plastic body is molded or cast.

In the construction shown in Figs. 3 and 4 of the drawing, the upper portion of the body of the handle 25 is formed with a bore or socket 30 which opens through the outer finger piece end 31 of the handle, the latter being closed by a cap 32 which may also be composed of the same plastic material as employed in the handle body, but may be of a color contrasting to the color of said body. In this connection it will be understood that another distinctive feature of my invention resides in utilizing handles of various colors which will be in harmony with the color scheme of a room or compartment. These colors may be of the light or deeper shades in the primary colors or in fact may be produced in marble or mottled two-tone effects.

Integrally formed with the body of the switch element 25 are two contacts 33 and 34, the contact 33 being disposed at one side wall of the bulb socket 30, whereas the terminal 34 is arranged at the bottom wall so as to engage an outer contact surface 35 and a bottom button contact 36 on the tube 27 in the manner of an ordinary light bulb when the neon tube 27 is inserted into the socket. It will be understood that suitable resiliency may be provided between the contacts 33, 35 and 34, 36, to insure the completion of the circuits therethrough. Arranged upon the lower end of the tube 27 is a suitable resistance which may be in the form of a coil so that when the circuit is completed to the contacts 33 and 34, the neon bulb will be illuminated. The contacts 33 extend through the body of the switch element and may be suitably anchored therein, the lower ends forming protruding terminals 37 and 38, which are adapted to engage the contacts 28 and 29 in the manner illustrated in Figs. 1 and 2 of the drawing.

In molding the switch element unit, the terminals 37 and 38 may normally extend in the position shown in dotted lines in Fig. 3, and may afterward be moved into the position shown in full lines by use of suitable tools for this purpose. It will of course be understood that the plates or strips forming the contacts or terminals 33, 37, and 34, 38, are insulated from each other within the body of the switch element. These plates are secured to and coupled by a tube 39 of insulating material which is utilized primarily for holding these parts together as an assembled unit when placing the same as an insert within the cavities or impressions of dies. The usual stop member 40 having the head 24 is also mounted upon the tube 39 centrally thereof. This member has laterally protruding ends 41, note Fig. 4, which are adapted to engage the strip 11 to limit the swinging movement of the handle in both directions. This member is reinforced and anchored in the body of the handle by providing apertures 42 therein through which the molded material is adapted to pass, as indicated in Fig. 4. It is also preferred that similar apertures 43 be provided in the plates of the contacts 33, 34, for a similar purpose.

After the handle has been cast with the parts 33, 34, 39 and 40 integrally therewith in the manner illustrated, the tube 27 is placed in position through the open end of the finger piece portion 31 after which the cap 32 is arranged in position which may be simply snapped in position, or if desired, cemented in place. The use of the switch when the handle is in the "off" or open circuit position as shown in full lines in Fig. 1 of the drawing, will enable the circuit to be completed to the neon tube or bulb 27 and the entire finger piece 31 of the handle will be illuminated. When the switch is thrown into the closed circuit position to complete the circuit through the contacts 18 and 19, the circuit to the tube 27 will be broken. This, however, is not absolutely essential as this circuit may be kept closed so no light will appear in the bulb 27 when the same is short-circuited through the contacts 18 and 19.

In Figs. 5 and 6 of the drawing, I have shown another method of constructing the device which would necessitate casting or molding the device in a position at right angles to that in which the device shown in Figs. 3 and 4 is molded. In this construction I have dispensed with the use of the coupling of the switch element contacts with each other and with the stop member; and have simply relied upon the grooving of the dies or molds to support the separate contacts and said stop member independently of each other. In this construction, the handle is represented at 25*a*, the pivot pin of the toggle at 26*a*, the neon tube or bulb at 27*a*, the bore or socket of the handle at 30*a* for receiving the tube 27*a*, the finger piece end of the handle at 31*a*, the closure cap at 32*a*, the contacts at 33*a*, 34*a*, equivalent to the contacts 33 and 34, the tube protruding terminal or contacts at 37*a* and 38*a*, and the stop member at 44. The stop member 44 has a hole 45 in the upper end thereof and within the body of the handle for receiving the pivot pin 26*a*. The member 44 is of the general construction shown in Fig. 6 and has an apertured central lower projection 46 with which the usual spring controlling the switch element is coupled, the member 44 being of a conventional construction; aside from the provision of apertures 47 therein for anchoring the member within the body of the handle 25*a* and for otherwise moving the structure of this member to adapt it to the present use. At this time it is well to point out that the members 40 and 44 as employed by me do not include the conventional parts which extend upwardly into the finger piece portion of the handle as is common with the conventional form of handles.

With the structure shown in Figs. 5 and 6, instead of mounting the contacts 33*a*, 37*a*, and 34*a*, 38*a*, upon an insulating bushing, these contacts are simply arranged in spaced relation to each

other in the molds and are provided with large central openings 48 which clear or are in spaced relation to the pin 26a so as to thoroughly insulate the contacts from each other within the body of the handle when mounted on the pin 26a. In forming the casting a dummy core pin may be used in place of the pin 26a which is removed from the resulting casting as will be apparent; or if desired, a retractable core pin may be used for this purpose as a part of the die structure. The neon tube will be provided with contacts 35a and 36a, similar to the contacts 35, 36 of the tube 27, for engaging the respective contacts 33a and 34a. It will be understood that the tube 27, 27a is frictionally held in position and suitable means may be provided to maintain this position of the tube in manners well known in the art.

As stated in connection with the structure as shown in Figs. 3 and 4, the device as seen in Figs. 5 and 6 may also be provided with apertured walls when the body of the handle or switch element is of a dense or substantially opaque material. In fact, apertures may be formed in the walls of the finger piece portion thereof when composed of what may be termed translucent or transparent materials. The cap 32, 32a, may be composed of a thin walled transparent thermoplastic material which would produce a bright domed light at the tip of the finger piece while still producing an illuminated or iridescent effect in the remainder of the finger piece.

It will appear that a switch element or handle made in accordance with the structure and teachings above described may be produced at a nominal cost and at the same time a very attractive, practical, as well as highly efficient device of the character described will be provided without modifying in any appreciable degree the general structure of devices of this kind. It will also appear that a device of the character described in addition to being practical in use from a standpoint of locating the position of the switch also eliminates unnecessary fingering and soiling of the wall around the switch which would otherwise result in the use of conventional types of switches even though the general position or location of the switch were known.

By producing the body of a material having a color in harmony with a room color, a pleasing and subdued glow will prevail in the room of this color at the switch element or handle. It is preferred in the construction of my switch element or handle to employ a plastic material having flame-proof characteristics; that is to say, to be of a non-explosive character so that in the event of a spark or arcing of the switch device no destruction or damage would take place. Such material as cellulose acetate will have these properties. Furthermore, this material is desirable from the standpoint that it can be produced as a substantially translucent body and in many colors of the lighter or brighter shades. It will also be understood that while certain types and kinds of switch elements are shown, my invention is not necessarily limited in these respects. The structure of the body of the switch element may be modified to suit the particular type and kind of switch which is desired; the only essential feature being to bear in mind that the contour of the body must be capable of being molded or die cast. It will also be apparent that my improved device may be used in conjunction with any electric circuit controlling appliances or other electrical devices or apparatus.

Having fully described my invention, what I claim as new and desire to secure by Letters Patent, is:

1. An illuminated switch element for switches of the character described, said element comprising a unitary body of molded plastic material, said body having a large inner end portion and an elongated tubular outer end portion forming the finger engaging part of the element, the bore of said tubular portion being adapted to receive a neon tube through the outer open end thereof, means forming a closure for said open end, means forming a pivotal support for the inner end portion of said element, two electric contacts imbedded in the inner end portion of said body and exposed in the bore of said tubular end to provide constant engagement with the terminals of the neon tube arranged therein, said contacts being exposed in spaced parallel relation to each other through the inner end of said body, said exposed contacts being arranged in alinement with said finger engaging part, the means forming the pivotal support for said element comprising a member at least partially imbedded in the inner end portion of said element, said member and body having a socket for a pivot pin, and said member and pin being insulated from the contacts imbedded in said element.

2. A switch element for switches of the character described comprising a unitary molded body of plastic material having translucent characteristics, said body having a wide pivot end portion and a reduced tubular outer finger grip portion, the bore of said finger grip portion opening outwardly through the end thereof, two contacts imbedded in the pivot end portion of said body within side walls thereof, said contacts having terminals opening into the bore of the tubular end portion to contact the terminals of a neon tube arranged in said bore, said contacts having other terminal ends protruding through the wide end of said body for movement into and out of engagement with other contacts completing an electric circuit to a neon tube supported in said body when the switch is in an "off" position, and said last named terminal ends extending in parallel relation and in longitudinal alinement with the finger grip portion of said element.

3. A switch element for switches of the character described comprising a unitary molded body of plastic material having translucent characteristics, said body having a wide pivot end portion and a reduced tubular outer finger grip portion, the bore of said finger grip portion opening outwardly through the end thereof, two contacts imbedded in the pivot end portion of said body within side walls thereof, said contacts having terminals opening into the bore of the tubular end portion to contact the terminals of a neon tube arranged in said bore, said contacts having other terminal ends protruding through the wide end of said body for movement into and out of engagement with other contacts completing an electric circuit to a neon tube supported in said body when the switch is in an "off" position, said contacts having within the wide end portion of said body large apertures in opposed relation to each other, and said wide end portion of the body having a transverse pivot pin receiving passage extending through the apertures of said contacts in such manner as to insulate a pivot pin from said contacts.

4. An illuminated switch element adapted to be pivotally arranged in a switch of the character described having spaced contacts disposed in

a plane common with the pivotal axis of said element, and means actuated by said element for making and breaking a circuit through said contacts, said element comprising a unitary body of molded material having a large inner end portion and an elongated tubular end portion forming the finger engaging part of the element, the bore of said tubular portion being adapted to receive a neon tube through the outer open end thereof, means forming a closure for said open end, means forming a pivotal support for the inner end portion of said element, two electric contacts imbedded in the inner end portion of said body and exposed in the bore of said tubular end to provide constant engagement with the terminals of the neon tube arranged therein, said contacts projecting in substantially parallel relation to each other through the inner end of said body, and said projecting contacts being adapted to register with the spaced contacts of said switch when said first named means is out of engagement with said spaced contacts whereby the circuit is closed to the neon tube when the switch element is in the "off" or open circuit position.

5. The combination with a switch box having terminals with which circuit wires are adapted to be connected and spring contacts coupled with said terminals and extending into said box at one end thereof, of a switch device pivotally supported in the box and adapted in the "on" and "off" positions respectively thereof to move circuit forming means into and out of engagement with said contacts, said device comprising a molded body of plastic material having a wide pivot end portion and a reduced tubular finger grip portion, a neon tube arranged within said tubular portion of said body, two electric contacts imbedded in the large end portion of said body and having terminal ends extending into the bore of the tubular portion to contact the neon tube in completing a circuit thereto, said contacts having other terminal ends protruding in substantially parallel relation through the enlarged end of said body, and extending into the box to engage the first named spring contacts in the "off" position of said switch device when the circuit forming means is out of engagement with said contacts.

MORRIS L. BIGMAN.