(No Model.)

W. E. GASTON.

NON-REFILLABLE BOTTLE.

No. 590,218. Patented Sept. 21, 1897.

Fig. 1.

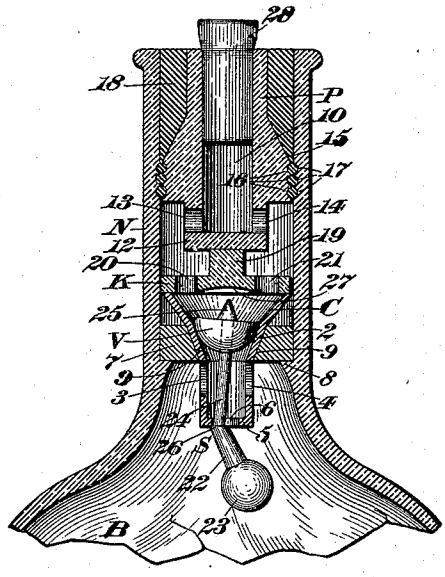

Fig. 2.

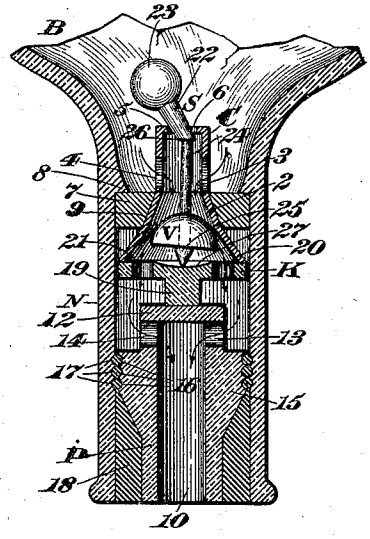

Fig. 4.

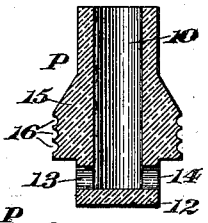

Fig. 6.

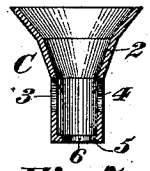

Fig. 3.

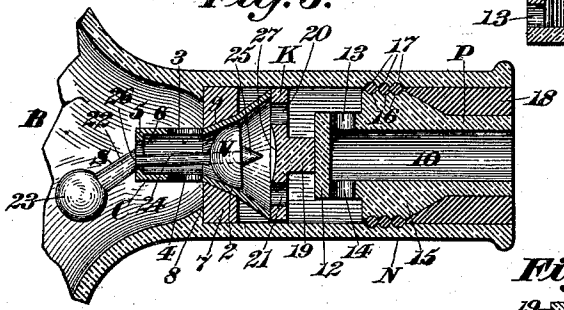

Fig. 7.



Fig. 8.

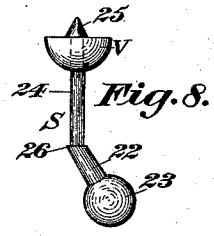

Fig. 5.



Witnesses;
C. W. Smith
Fred. J. Dole.

Inventor;
William E. Gaston
By his Attorney
F. W. Richards.

THE N. ARIS PETERS CO., PHOTO-LITHO., WASHINGTON, D. C.

UNITED STATES PATENT OFFICE.

WILLIAM E. GASTON, OF WEST WINSTED, CONNECTICUT, ASSIGNOR OF ONE-HALF TO FRED K. PHILLIPS, OF SAME PLACE.

NON-REFILLABLE BOTTLE.

SPECIFICATION forming part of Letters Patent No. 590,218, dated September 21, 1897.

Application filed June 5, 1897. Serial No. 639,500. (No model.)

To all whom it may concern:

Be it known that I, WILLIAM E. GASTON, a citizen of the United States, residing in West Winsted, in the county of Litchfield and State of Connecticut, have invented certain new and useful Improvements in Non-Refillable Bottles, of which the following is a specification.

This invention relates to non-refillable bottles; and the object of the invention is to furnish a simple and efficient device of this character the several parts of which can be manufactured at a low cost and quickly assembled, and when in working position any efforts to fill the bottle fraudulently will be effectually prevented thereby.

My improved bottle in its preferred form comprehends a valve-seat, a valve, and its stem provided with a weight whose center of gravity is situated at one side of the longitudinal axis of the valve-stem, the latter preferably having means for engaging a fixed part in the bottle, so as to lock the valve firmly against its seat, thereby to thwart any attempts to refill an empty bottle.

In the drawings accompanying and forming part of this specification, Figure 1 is a longitudinal central section of the upper part of a bottle, showing my improvements therein, the bottle being represented in an upright position. Figs. 2 and 3 are similar views, the bottle being illustrated, respectively, in its inverted and horizontal positions. Fig. 4 is a longitudinal central section of the stopper-holding plug. Fig. 5 is a transverse central section of the valve-keeper. Fig. 6 is a longitudinal central section of the valve casing or shell. Fig. 7 is a transverse central section of the carrier for the valve shell or casing, and Fig. 8 is a view in elevation of the valve and its stem.

Similar characters designate like parts in all the figures of the drawings.

In the accompanying drawings in Figs. 1, 2, and 3 I have deemed it necessary to illustrate but the upper portion of a bottle, as B, the several controlling devices being preferably disposed within the neck N thereof.

The invention embodies as a part thereof a valve of suitable construction, such as V. Said valve is represented as being of semi-spherical shape, its flat face being outermost, whereby a wide area is presented to any inflowing liquid to force the valve toward its seat, so that the valve-locking means can be rendered effective to hold the same against retractive movement, the valve being also preferably made of rubber or analogous elastic material, whereby it is adapted to be wedged tightly against its seat. The valve V is preferably inclosed or situated in a suitable casing or shell, such as C, near the inner end of the neck, said shell being of frusto-conical shape and having on the inside thereof the tapered or inclined valve-seat 2, the smaller end of which is nearest the body of the bottle.

The shell or casing C has at a suitable point therein, and preferably at diametrically opposite sides thereof, the ports or openings 3 and 4, communicating with the interior of the bottle, and through which when the latter is inverted or tilted, as shown in Fig. 2, the liquid is adapted to flow. The lower end of the valve shell or casing is provided with the annular flange 5, which is adapted to coöperate with a suitable locking device operative with the valve, as will hereinafter appear, whereby said valve can be wedged firmly against its seat or maintained in a closed position except when it is desired to pour liquid from the bottle, said flange being of such a width as to leave a guide-opening 6 in the lower or inner end of the shell or casing, through which the valve-stem preferably passes.

Any convenient means may be employed for securing the valve shell or casing in the neck of the bottle, a carrier or disk 7 being shown for this purpose, said carrier or disk being adapted to rest on the annular shoulder 8, near the inner end of the neck N, and being suitably held in place. The carrier or disk has preferably centrally thereof the tapered opening 9, into which the valve shell or casing can be fitted tightly to hold the same in position.

For the purpose of preventing access to the valve with sticks, wire, or other similar means to force it away from its seat I preferably secure in the outer end of the neck a plug P, preferably permanently sealed in place and provided with a suitable guard. The plug

P may be made of any suitable material, such as glass, and it has the longitudinal bore or passage 10, which is closed at the inner end by the guard or bar 12, whereby it is impossible to thrust a device from the outside into contact with the valve to open or move it away from its seat 2.

The plug P has adjacent to the guard 12 the ports 13 and 14, in communication with the interior of the bottle, so that when the valve is not in contact with its seat the liquid can be freely poured from the bottle, if desired. (See Fig. 2.)

As hereinbefore stated, the plug is preferably permanently sealed in place, this result being accomplished in any suitable manner. In the form of the invention represented when the several other parts of the device are assembled in place in the bottle the plug P will be placed within the outer end of the neck until its outer end is flush with the outer end of the neck, at which time some suitable sealing composition or substance, as plaster-of-paris, can be poured into the neck of the bottle to fill in the space between the plug and the neck, the plug having on its widened portion 15 a series of circumferential grooves or channels 16, preferably in alinement with a corresponding series of grooves 17 on the inside of the neck. The sealing composition 18 is designed to enter the spaces formed by the several grooves, whereby the plug can be firmly anchored in place. The diameter of the widened sealed portion 15 of the plug is substantially the same as the inside of the bottle, thereby to prevent any sealing composition 18 entering the inside thereof.

In connection with the valve V means will preferably be provided for limiting the reciprocatory movement thereof, a keeper, such as K, being illustrated for this purpose, the latter being in the form of a disk fitting into the neck adjacent to the valve and having on its outside face the projection 19, adapted to bear against the adjacent face of the wall 12 of the plug, thereby to hold the disk in place. The keeper or disk K is punctured at suitable points with suitable ports, as 20 and 21, to permit, when desired, the passage of the liquid from the bottle. The stem of the valve is designated by S, and it may be of any suitable form. In the form shown the valve-stem is disposed in two planes, the deflected portion 22 thereof having fixed at its inner end the weight 23, which is preferably spherical, the center of gravity of said weight being situated at one side of the longitudinal axis of the valve-stem. The valve-stem is provided, preferably, with a locking device (designed to engage a fixed part, such as the flange 5 on the inner end shell) to hold the valve V firmly against its seat. The main portion 24 of the valve-stem S is passed centrally through the valve and is provided with a pointed nose or head 25, the function of which will be hereinafter set forth. The deflected portion 22 of the valve-stem S is of somewhat larger diameter than the portion 24 thereof, whereby there is formed between the two a locking-shoulder 26, adapted to cooperate with the flange 5 or similar fixed part in the bottle to hold the valve against its seat.

The disk K has on the side thereof adjacent to the valve the concavity or depression 27, and when the valve falls away from its seat and the pointed end 25 of the valve-stem comes in contact with any portion of said concavity the weight 23, fixed to the valve-stem, is designed to carry the said pointed end to the deepest portion or center of the concavity, whereby the valve can be moved away from its seat to permit the contents of the bottle or any part thereof to pass therefrom.

To assemble the several parts in a filled bottle, the valve shell or casing C will be forced into the carrier or disk 7 and the latter inserted in the neck N of the bottle until it reaches the stop-shoulder 8. The keeper or disk K will then be placed in the bottle-neck until it abuts against the flared or widened end of the valve-shell. Lastly, the plug P will be inserted in the outer end of the neck until the wall or guard 12 thereon abuts against the projection 19 on the valve-keeper, the space between the plug P and the neck being then filled in with a suitable sealing composition, as hereinbefore set forth. A stopper or cork, as 28, can then be inserted in the bore 10 of the plug.

In Figs. 1 and 3 the valve V is shown wedged tightly against its seat, the locking or stop shoulder 26 being in engagement with the cooperating flange of the valve-shell. To pour from the bottle, it is simply necessary to invert the same to the proper angle and slightly jar it, so that the locking-shoulder 26 can be disengaged from the inner face of the flange 5, and when this action takes place the weight 23 by falling will force the valve V away from its seat, as shown in Fig. 2.

Let it be assumed that the bottle thus constructed is empty and that an effort is made to refill the same. If a vacuum be in the bottle and such an attempt is made, it will be apparent that when the inflowing fluid strikes the flat face of the valve V a very slight pressure will be necessary to raise the valve until the shoulder 26 is in line with the inner face of the flange, at which time the weight 23 can drop to carry the locking-shoulder 26 over the flange 5 to bind or wedge the valve against its seat 2.

Should there be any air in the bottle, the pressure of the incoming liquid, in connection with the air in the empty bottle, will fracture or break said bottle. If the bottle should be inverted, as shown in Fig. 2, and is empty and the valve V is away from its seat and said bottle should be tilted to a horizontal or approximately horizontal position, as represented in Fig. 3, the weight 23, as the bottle is turned, will naturally drop, the shouldered or enlarged portion 22 of the stem riding along the flange 5 until the shoulder

26 is over the said flange, as indicated in said figure, thereby to lock the valve closed.

Having described my invention, I claim—

1. A bottle comprehending a valve-seat; a valve; and a weighted valve-stem disposed in different planes and provided with valve-locking means for engaging a fixed part in the bottle.

2. A bottle comprehending a valve-seat; a valve; and a weighted valve-stem disposed in different planes and having a valve-locking shoulder for engaging a fixed part in the bottle.

3. A bottle comprehending a valve-seat; a valve; a weighted valve-stem disposed in different planes and constructed in two sizes, respectively, to form a valve-locking shoulder for engaging a fixed part in the bottle.

4. A bottle comprehending a valve-seat; an elastic valve; and a weighted valve-stem disposed in two different planes and provided with valve-locking means for engaging a fixed part in the bottle.

5. The combination of a bottle having a neck; a shell located in the neck and provided with a valve-seat; a valve situated in the shell; and a weighted valve-stem disposed in different planes and provided with valve-locking means for engaging the shell.

6. A bottle having a neck; a frusto-conical valve-shell furnished with a valve-seat and having at its inner end an opening whereby there is formed a flange; an elastic valve situated in the shell; and a weighted valve-stem disposed in two different planes and furnished with valve-locking means for engaging the flange.

7. A bottle of the class specified comprehending a neck; a frusto-conical casing or shell situated in the neck and having an annular flange at the inner end thereof; a semi-spherical valve in said shell or casing; a stem secured to said valve and disposed in two planes, one portion of the stem being of larger diameter than the other and having a weight; a keeper for the valve; and a bored plug situated in the neck and closed at its inner end.

8. A bottle of the class specified comprehending a neck having an annular shoulder therein; a recessed disk seated in the neck against said shoulder; a shell or casing having a valve seated therein and fitted in the recess of said disk, said shell having a valve-seat; a valve disposed in said shell, the stem of the valve being disposed in two planes and having a weight secured thereto; a keeper for the valve, having ports and also provided with a projection extending outward therefrom; and a plug permanently sealed in the end of the neck and closed at its inner end, said closed end of the plug abutting against said projection.

WILLIAM E. GASTON.

Witnesses:
RICHARD T. HIGGINS,
JOHN D. SHEA.