March 28, 1961 J. ROSENTHAL 2,976,582

DOOR LATCH ARRANGEMENT

Filed July 22, 1957 5 Sheets-Sheet 1

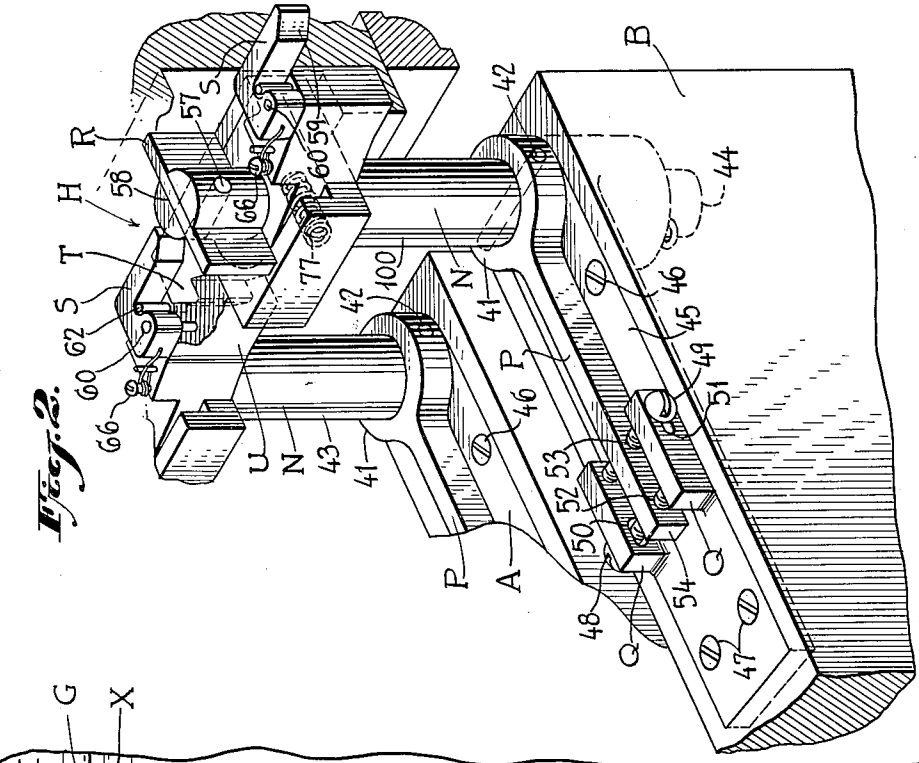

Fig. 2.

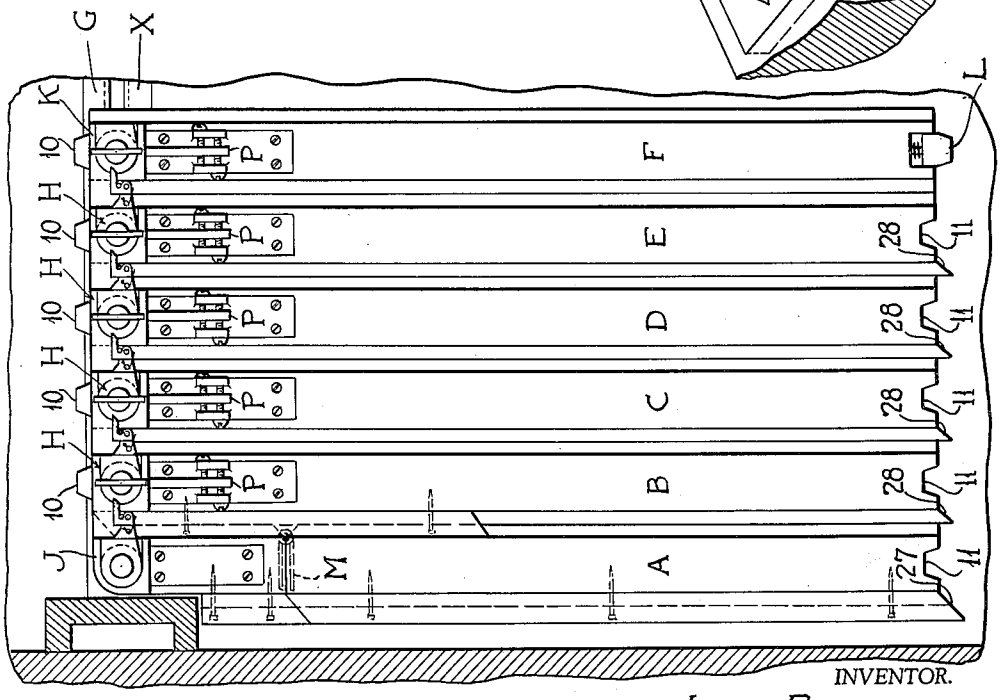

Fig. 1.

INVENTOR.
JOSEPH ROSENTHAL.
BY
ATTORNEY.

March 28, 1961 J. ROSENTHAL 2,976,582

DOOR LATCH ARRANGEMENT

Filed July 22, 1957 5 Sheets-Sheet 2

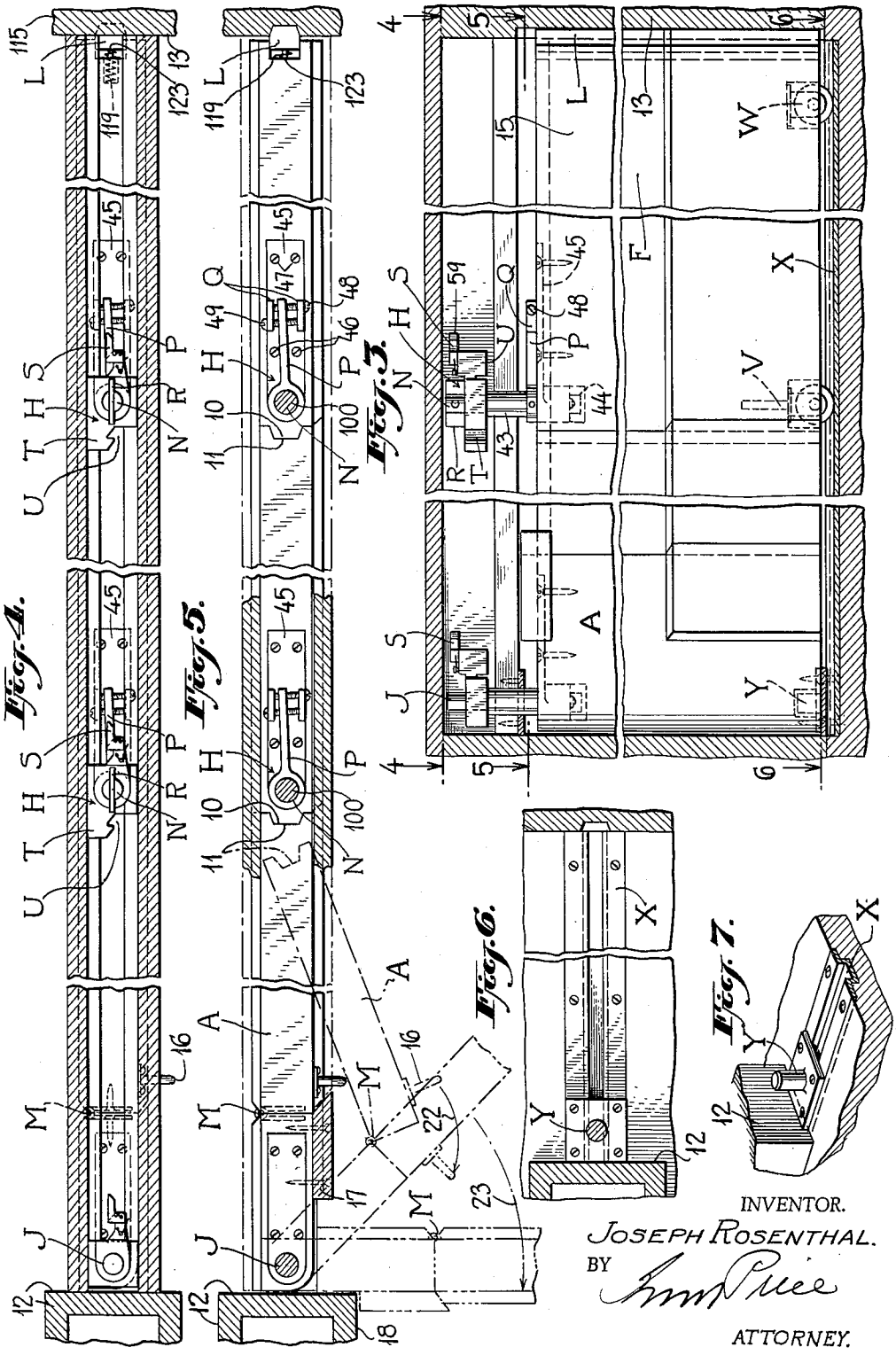

INVENTOR.
JOSEPH ROSENTHAL.
BY
ATTORNEY.

March 28, 1961 J. ROSENTHAL 2,976,582

DOOR LATCH ARRANGEMENT

Filed July 22, 1957 5 Sheets-Sheet 3

Fig. 8.

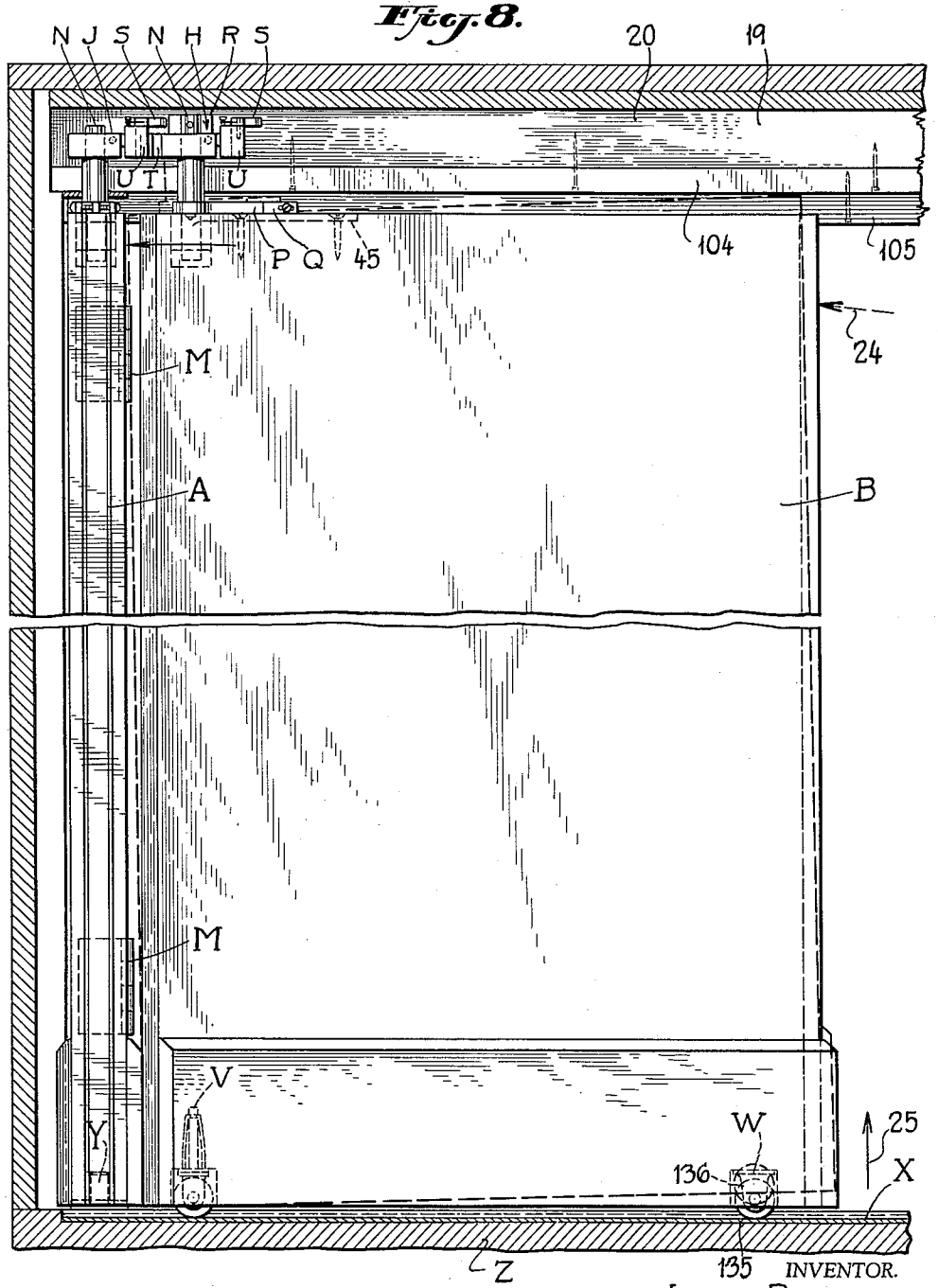

INVENTOR.
JOSEPH ROSENTHAL.
BY
ATTORNEY.

March 28, 1961 J. ROSENTHAL 2,976,582

DOOR LATCH ARRANGEMENT

Filed July 22, 1957 5 Sheets-Sheet 4

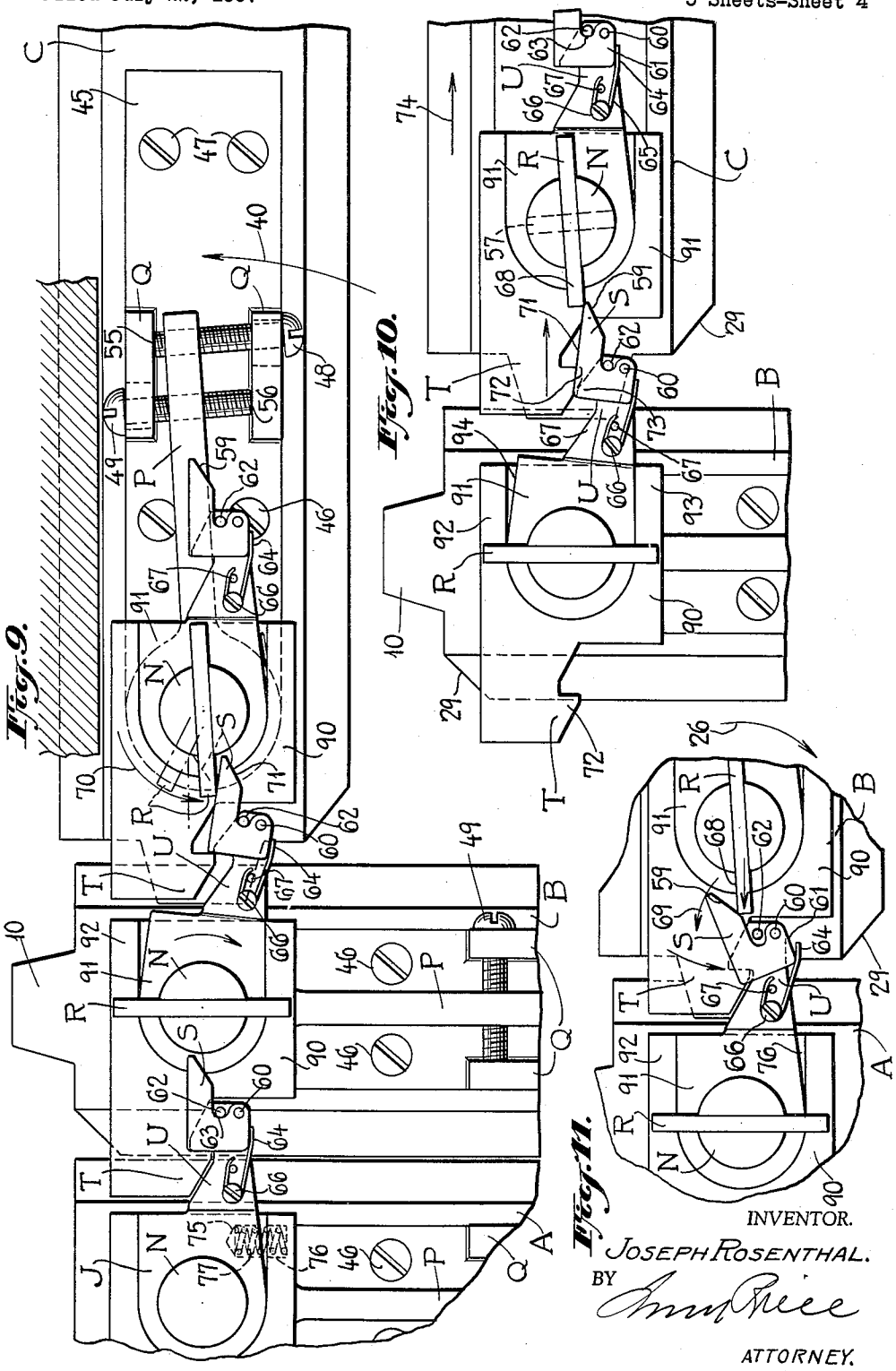

Fig. 9.

Fig. 10.

Fig. 11.

INVENTOR.
JOSEPH ROSENTHAL.
BY
ATTORNEY.

March 28, 1961 J. ROSENTHAL 2,976,582

DOOR LATCH ARRANGEMENT

Filed July 22, 1957 5 Sheets-Sheet 5

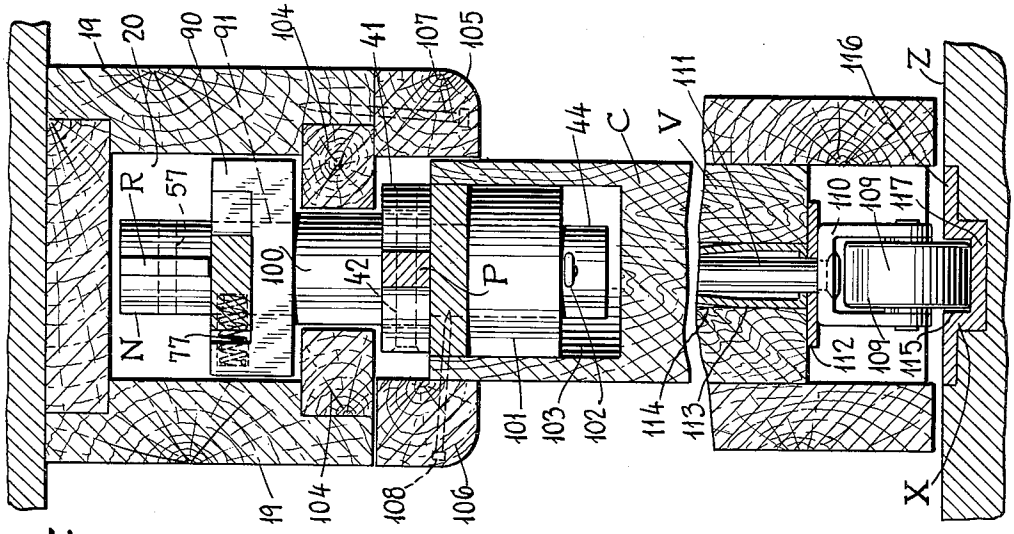

Fig. 1A.

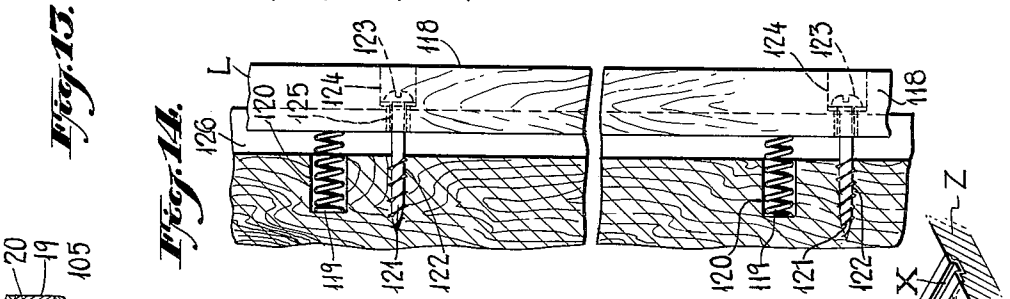

Fig. 1B.

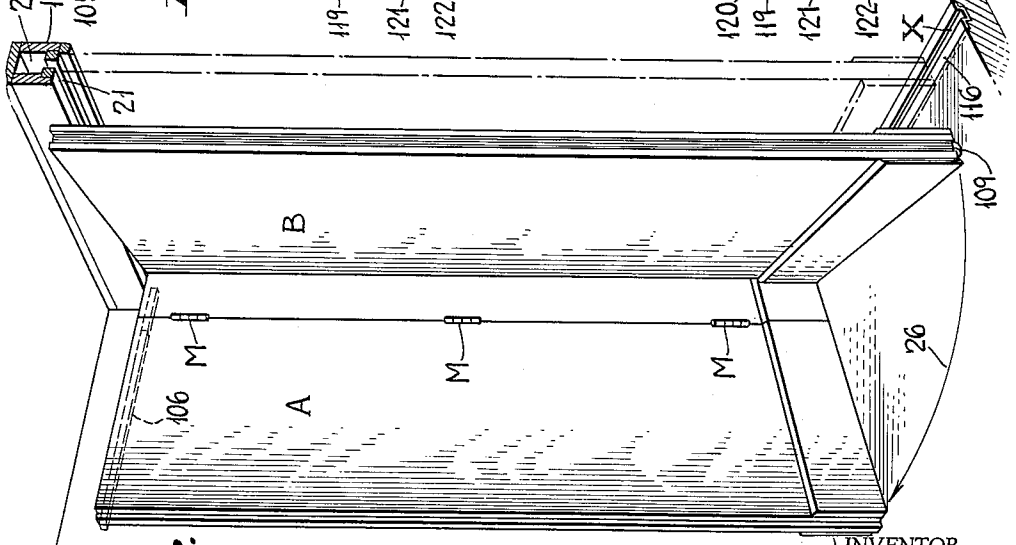

INVENTOR.
JOSEPH ROSENTHAL.
BY
ATTORNEY.

United States Patent Office

2,976,582

Patented Mar. 28, 1961

2,976,582

DOOR LATCH ARRANGEMENT

Joseph Rosenthal, 1811 Phelan Ave., Bronx 57, N.Y.

Filed July 22, 1957, Ser. No. 673,383

4 Claims. (Cl. 20—16)

The present invention relates to door latch arrangement and it particularly relates to a latching arrangement for a plurality of doors which may be extended to form a wall or partition or collapsed or assembled against a wall, to open or remove said wall or partition.

Although not limited thereto, the present invention will be particularly described in connection with its application to sliding and swinging door arrangements which are provided with tracks at their lower ends, with swivel rollers at one side and fixed rollers at the other, permitting them to be moved into position to form a wall or partition, while their upper portions are latched together by the latch construction which forms the important feature of the present invention.

It is among the objects of the present invention to form a simple, low cost latching invention of the character described which will permit the sliding and swinging doors to be latched together either in collapsed position against a side wall or in extended position along a trackway or runway to form a partition or wall, or to sub-divide a room or space, as the case may be.

A particular object of the present invention is to provide a latching arrangement which will lend itself most satisfactorily to utilization with such a composite door or partition arrangement and which will substantially automatically, with only slight manual manipulation, latch the doors either in nested position against the wall or in extended position to form a partition through or across a room or interior enclosure.

Still further objects and advantages will appear in the more detailed description set forth below, it being understood, however, that this more detailed description is given by way of illustration and explanation only and not by way of limitation, since various changes therein may be made by those skilled in the art without departing from the scope and spirit of the present invention.

In accomplishing the above objects, according to one preferred embodiment of the present invention, there is provided a pivotally mounted swinging latch arrangement on the top of each door, and desirably at one end of each door, which will enable the doors to be latched together, particularly when nested against the wall.

These latched arrangements will be substantially automatically in affinity and will consist of a main transverse diametral bar member which may be actuated when rotated to act upon a finger or actuating lever, which in turn will latch and unlatch the connecting latch elements.

Without any direct contact with the latching element, it is possible from the lower ends of the door to actuate the latching constructions either to latch the assembled doors together or to unlatch them for extension purposes, such latching taking place upon the normal turning movements of the doors as they are either nested together or removed from nested position for extension across a room to form a partition or wall.

With the foregoing and other objects in view, the invention consists of the novel construction, combination and arrangement of parts as hereinafter more specifically

described, and illustrated in the accompanying drawings, wherein is shown an embodiment of the invention, but it is to be understood that changes, variations and modifications can be resorted to which fall within the scope of the claims hereunto appended.

In the drawings wherein like reference characters denote corresponding parts throughout the several views:

Fig. 1 is a top plan view of the assembled doors or door elements in position nested against the wall with the latch arrangements all engaged with one another.

Fig. 2 is a fragmentary top perspective view of the latching arrangement upon an enlarged scale as compared to Fig. 1, more clearly showing the doors in latched nested position with some of the elements partly broken away, more clearly to show the construction.

Fig. 3 is a fragmentary side elevational view showing the doors in extended position with latches being disengaged.

Fig. 4 is a transverse horizontal sectional view looking downwardly upon the line 4—4 of Fig. 3.

Fig. 5 is a transverse horizontal sectional view looking downwardly, taken upon the line 5—5 of Fig. 3, showing the doors in extended position.

Fig. 6 is a transverse horizontal sectional view taken upon the line 6—6 of Fig. 3.

Fig. 7 is a fragmentary top perspective view showing the end of the runway in the floor for carrying the bottom of the sliding and swinging doors.

Fig. 8 is a side elevational view of one of the doors as it is about to be turned 90° to be swung into nested position against the end or fixed door most closely adjacent the wall.

Fig. 9 is a top sectional view similar to Fig. 4, but upon an enlarged scale as compared to Fig. 4, showing two of the doors nested against the wall with another door about to be unlatched.

Fig. 10 is a top horizontal sectional view similar to Fig. 9 showing the next sequence in the operation as the door is unlatched and is about to be moved to form the partition.

Fig. 11 is a top horizontal sectional view similar to Figs. 9 and 10 but showing the reverse operation of the doors being latched together as one door is swung 90° to be nested against the next door.

Fig. 12 is a front perspective view showing two of the doors most closely adjacent the wall, as they are when they are in position about to be nested together.

Fig. 13 is a transverse vertical sectional view taken through one of the doors showing one of the latching arrangements as well as the lower pivotal swinging lower arrangements.

Fig. 14 is a transverse vertical sectional view showing the spring contact edge member associated with the last door in the nest and the first door to be moved out to form the partition.

Referring to Fig. 1, there is shown a nested door arrangement with six doors designated A, B, C, D, E and F. The doors have a lower trackway G and each of the doors B, C, D and E have a latching arrangement H which is the distinctive feature of the present invention. The innermost door A has a partial latching arrangement J, while the outermost door F has a partial latching arrangement K which cooperate with the main full latching constructions H on the intermediate doors B, C, D and E.

The outermost door has a spring wall contact structure L, while the innermost door has an intermediate hinge arrangement M.

Referring to the latching arrangement of Fig. 2, there is a main stud or shaft member N which is affixed to and has limited movement as a result of the lever member P being adjustably positioned between the blocks Q. At the upper end of the pin member is a plate bar R.

This plate bar R is designed to act upon the latch lever S, which in turn is designed to actuate the male latch member T into or out of engagement with the female latch member U.

At the bottom of each door there is positioned the swivel roller member V at the nesting side and the fixed member W which may be lifted out of the track structure X.

Referring particularly to Figs. 1, 3, 8 and 12, when extended, the doors will be in aligned position forming a partition, as indicated in Fig. 3, with the door A close to the wall having the fixed pivot Y, and with the latch arrangement H being separated. In this position the doors will fit together by reason of the interengagement of the projecting portions 10 fitting in the recesses 11, as is best shown in Fig. 5.

In this condition the doors will extend from the wall portion 12 across the room, as indicated in Figs. 4 and 5, to the wall portion 14, with the resilient member L fitting into the recess 15 in the wall portion 13 and constituting a partition or wall separating the room. (See particularly Figs. 3, 4 and 5.)

It will be noted that Figs. 3, 4 and 5 show the extended position of the doors forming the partition or wall, as the case may be. When the doors are to be nested in the position shown in Fig. 1, each door is slid to the left from the position as shown in Figs. 3, 4 and 5 upon the rollers V and W.

Referring to Fig. 4, the door A close to the wall will then be broken from solid line position to dotted line position, as shown in Fig. 5, by grasping the handle 16, and then will be moved against the wall with its shoulder portion 17 (see Fig. 5) being closely adjacent the surface 18 at one side of the wall structure 12. This will withdraw the recess portion 11 from the ridge portion of the next door B.

Referring to Fig. 12, it will be noted that above the top of the door structure is an enclosure 19 with a recess 20 and a slot 21 within which the latch arrangement H may move so that the latch arrangements will always be held within the recess or slideway 20 and the slot 21.

Referring to Fig. 5, the swinging movement to nest the first door A is indicated by the arcuate arrows 22 and 23.

When, as in Fig. 12, the door A has been nested against the wall and the next door B has been moved to the left, as shown in Fig. 8 in the direction of the arrow 24, the right lower end of the door may be lifted upwardly, as indicated by the arrow 25, to lift the fixed roller W out of the track X.

When this occurs, the next door B may then be swung away from the track X in the direction of the arrow 6 of Fig. 12 to be nested against the wall in the position shown in Fig. 1.

This operation of sliding the door to the left in the trackway X, followed by a swinging movement 26, may then be repeated for each door C, D, E and F until they are all nested together, as shown in Fig. 1. In this position it will be noted that the ridge edges 10 of each door are directly above the track X, while the groove ends 11 have been swung a distance of 90° away from the track.

At the same time the overlapping oblique portions 27 and 28 will be at the same side as the groove portions or recess portions 11. The oblique portions 27 and 28 fit against the corresponding beveled faces 29 which are shown in Figs. 9 and 10.

In the extended position of Figs. 3, 4 and 5, latches are disengaged, but in the nested position of Figs. 1 and 2 the latches are engaged, and this is done substantially automatically when the doors are moved to nested position, as indicated in Figs. 1 and 2.

On the other hand, when the doors are again withdrawn to be extended across the room, the unlatching will take place automatically in the manner which will be more fully described in connection with Figs. 2, 9, 10 and 11.

First referring to Fig. 9, it will be noted that in latched position the diametral bar members extend transverse to the track in the longitudinal plane of the door. At the same time the male latch members T have engaged with the female latch members U at the left, while they are being unlatched at the right, with the door C being swung as indicated in the direction 40 from the nested arrangement, as shown in Figs. 1 and 9.

The position of the key or diametral bar R is fixed in respect to the stud N and may be adjusted by means of the lever bar P, which has an eye 41 (see Fig. 2) fixed in position by means of the pin 42 on the lower end 43 of the vertical shaft member N.

As shown in Fig. 2, the shaft member N extends into the door structure at 44, through the top plate 45.

The top plate 45 is recessed into and held in position at the top of the bar by the screws 46 and 47.

In Fig. 2 there is shown the opposite screws 48 and 49 which extend through the blocks Q, formed integrally and extending upwardly from the plate 45. These screws have slotted connections at 50 and 51 in the opposite plates and they are threaded at 52 and 53 directly through the end 54 of the lever P. (See Fig. 2.)

The ends of the screws 48 and 49 at 55 and 56 (see Fig. 9) will contact the inside faces of the heads or blocks Q and thus fix the position of the arm P and the key or bar R.

The key or bar R is fixed by the pin 57 in the slot 58 in the top of the shaft N. (See Fig. 2.)

This key, when moving 90° to nested position as shown in Fig. 1, or reversal to unnested position as shown at the right of Fig. 9, will act upon the lever member S.

The lever member S has an oblique nose 59 at the end thereof and it is pivotally mounted on the stud 60 at its heel 61. (See Fig. 10.)

The pin 62 which fits in the recess 63 in the lever S acts as a stop to limit its movement under the action of the end 64 of the spring 65. The spring 65 is mounted by the screw 66 and by its end being received in the heel 67 in the female latch member U.

In latching, as shown in Fig. 11, the end 68 of the key R will strike the oblique nose 59, moving the lever S in the direction of the arrow 69 and causing the male member T to latch into the female member U in the manner shown in Fig. 11.

Then the bar B will be turned from the position of Fig. 11, as indicated by the arrow 26 in Fig. 12 to the nested position of Fig. 1, with the lever S returning to its original position, as shown at the left of Fig. 9.

Upon unlatching, as shown in Fig. 9 at the right, the key R will be moved in the direction indicated by the arrow 70 and will strike the back face 71 of the lever S, forcing the female latch member U from its engagement with the male latch member T, as shown in the middle portion of Fig. 9.

The unlatched position is indicated in Fig. 10, with the lever S now being forced by the end 68 of the key R downwardly so that the nose portions 72 of the male member and 73 of the female member have by-passed one another and the door C then may be moved to the right in the direction indicated by the arrow 74. (See Fig. 10.)

It will be noted that this latching and unlatching takes place automatically when each door is swung from nested or to nested position without any manual manipulation, and this latching arrangement may be out of sight and held in the channel 20 at the top of Fig. 12 without being subject to either manual manipulation or visual observation.

The last latched member J associated with the door A is provided with the recesses 75 and 76 which receive the spring 77.

This spring 77 tends to press the female element U of the latch J upwardly to retain it in engagement with the male member T.

Referring to Fig. 10, it will be noted that the male latch member extends to the left from the plate **90** which is positioned below the key member R, while the latch member U is mounted on the plate **91** which is positioned between the extensions **92** and **93** of said plate **90**. (See Fig. 10.)

The plate **91** may move between the extensions **92** and **93**, this freedom of motion being possible due to the space **94**, as shown in Fig. 10.

In Fig. 10 the plate **91** is shown in its lowermost position against the extension **93** of the plate **90**. In Fig. 11, the plate **91** is shown in its uppermost position against the extension **92** of the plate **90**. This movement permits the latching and unlatching movement, as is illustrated and described in connection with Figs. 9, 10 and 11.

It will be noted that the spring **97** tends to bias the plate **91** and the female member U against the arm **92** and into latched position.

Referring to Fig. 13, the channel **20** receives the key member R as well as the upper shaft portion N and the entire latching structure above the end **100**. The lower end **44** of the shaft N will be held by the collar **101** and the pin **102** in the recess **103** in the top of the door C.

The guide members **104** are positioned directly above the eye or collar **41** and directly below the plate **90** which, as shown in Figs. 2 and 13, is recessed to receive the plate **91**.

The deepnding portions **105** will be positioned on the back of the guideway **19**, while the corresponding portion **106** will be positioned on the top of the door, and these portions will be respectively held in position by means of the nails **107** and **108**. (See Fig. 13.)

The lower end of the door is recessed to receive the swivel roller **109** carried in the U-shaped yoke **110**. The top of the yoke has an upwardly extending pin **111** extending through the plate **112** and into the tapered sleeve **113** in the recess **114**. The roller **109** will ride in the recess **115** of the track X, which has the wings **116** and the depressed portion **117** recessed into the floor Z.

The end of the last door F has the spring contact structure L which is also shown in smaller scale at the right of Figs. 3, 4 and 5. This consists of a vertical bar **118** which is pressed upwardly by means of the springs **119** in the recesses **120**.

The screws **121** fitting into the door structure at **122** will have their heads **123** positioned in the recesses **124**.

At the bottom of each recess is placed a male sleeve **125** acting as a stop to limit the movement of the bar **118** under action of the springs **119**. This bar **118** fits into the recess **126** in the right edge of the door.

The other roller W, as shown in the lower right hand corner of Fig. 8, is not of the swivel construction but is lifted out of the track when the doors are swung together and it consists of a roller **135** held in the clevis **136** which is mounted in the bottom of the forward end of the door.

The two positions of the door to engage or disengage the roller **135** in respect to the track X are indicated in Fig. 8, with the solid line position indicating the roller engaged in the track X, while the dotted line position indicates the roller **135** out of the track X.

It will be noted that the lower end of the door A has a fixed pivot Y at the end of the track X, as is illustrated in Figs. 3, 6 and 7.

It is thus apparent that the present applicant has provided an automatic swinging latch arrangement which does not have to be manually manipulated or visually observed and which will automatically latch and unlatch sliding doors of the character described when they are moved inwardly for nesting or outwardly to be moved across the room to serve as a wall or partition.

The latching is automatically achieved when the doors are moved into nested position and the unlatching is automatically achieved when the doors are moved away from nested position and across the room, the details of the latching and unlatching operation being best shown in Figs. 9, 10 and 11.

As many changes could be made in the above door latch arrangement, and many widely different embodiments of this invention could be made without departure from the scope of the claims, it is intended that all matter contained in the above describption shall be interpreted as illustrative and not in a limiting sense.

Having now particularly described and ascertained the nature of the invention, and in what manner the same is to be performed, what is claimed is:

1. In combination with a plurality of slidably mounted and pivotally mounted independently swinging doors of the type having tracks at the floor and ceiling extendable to form a partition and collapsible to be nested against one another, a latch arrangement for said plurality of independently swinging doors, each door carrying said arrangement at one corner thereof, said latch arrangement including a vertical pivot rod, a lever fixed to said pivot rod extending along the top of each door to adjust the position of the rod, a horizontal plate mounted on the upper end of the pivot rod carrying a fixed outwardly projecting latch hook at one side and a swinging latch hook at the other side mounted in the horizontal plate and a fixed vertical plate on the pivot rod, said fixed latch hook engaging the swinging latch hook of the next adjacent door when the doors are nested against one another and said vertical plate causing disengagement of the latch hooks when the doors are rotated and moved to form a partition.

2. The arrangement of claim 1, said horizontal plates each having an outwardly projecting portion extending transversely to the door and beyond the sides thereof serving as said fixed hook and having a recess at the other side, receiving and permitting swinging motion of said swinging hook, the swinging hook of one latch arrangement engaging the fixed hook of the next engagement latch arrangement when the doors are latched together in collapsed position and both hooks extending transversely to and beyond the sides of the doors in latched position and parallel to the doors in unlatched position.

3. The arrangement of claim 1, said fixed vertical plates extending parallelly to the sides of the doors and along the long dimension of the doors and acting on said swinging hook when the doors are extended to release the engagement between the fixed hook of one door and the swinging hook of the next adjacent door.

4. The arrangement of claim 1, said horizontal plate being rotatable 90° upon swinging movement of the doors so that the latch hooks will extend on opposite sides of the plate in the direction of the door when extended and on opposite sides of the door transversely to the door when the doors are closed together and latched.

References Cited in the file of this patent

UNITED STATES PATENTS

806,772	Brill et al.	Dec. 12, 1905
1,230,345	Urmsom	June 19, 1917
1,612,497	Dodge	Dec. 28, 1926
1,612,498	Smith	Dec. 28, 1926
1,612,499	Etheredge	Dec. 28, 1926
1,901,304	King	Mar. 14, 1933
1,934,299	Fairhurst	Nov. 7, 1933