Dec. 10, 1946. T. J. BOERNER ET AL 2,412,314

HIGH FREQUENCY APPARATUS

Filed June 17, 1943 8 Sheets-Sheet 1

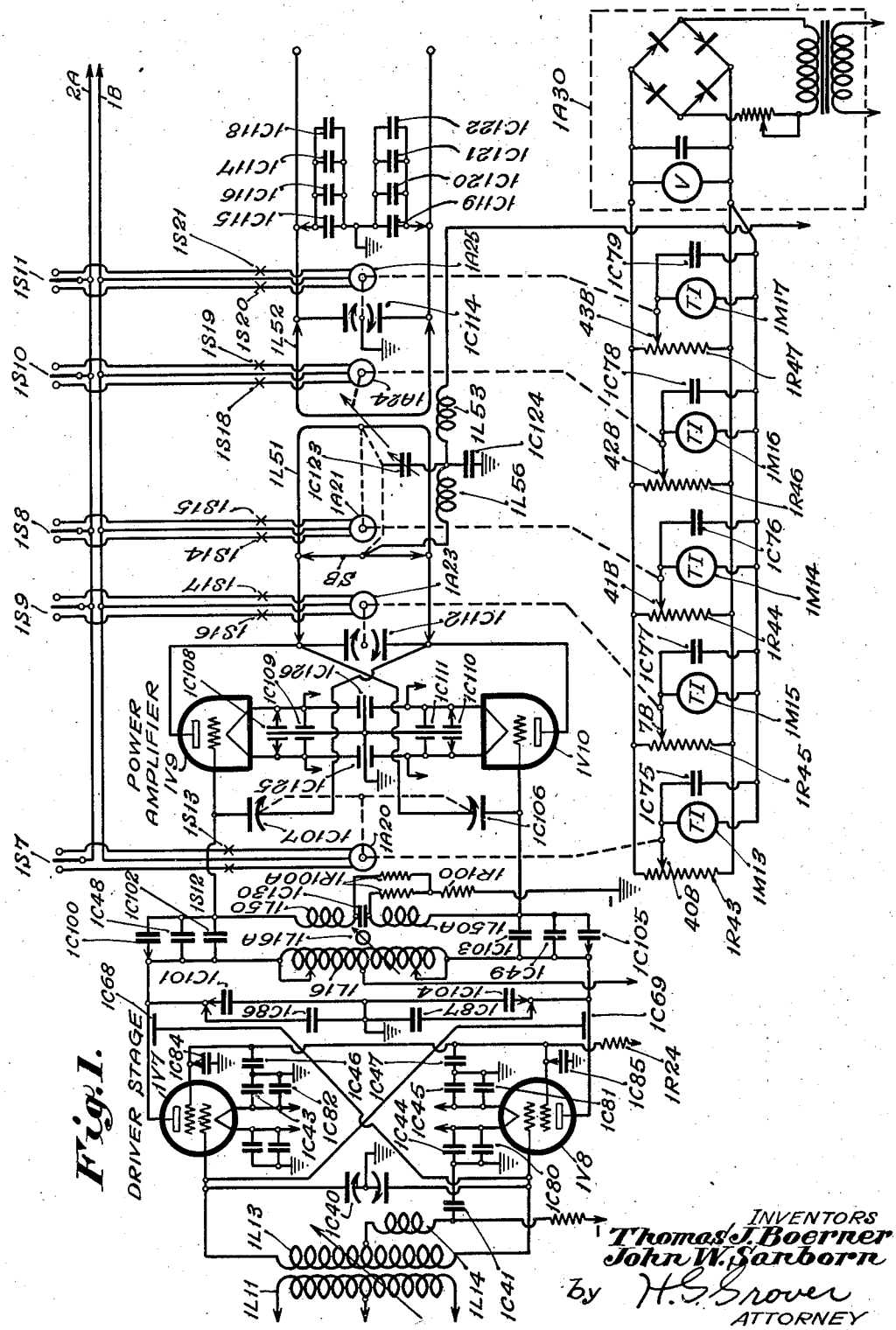

Fig. 1.

INVENTORS
Thomas J. Boerner
John W. Sanborn
by H. S. Grover
ATTORNEY

Dec. 10, 1946. T. J. BOERNER ET AL 2,412,314

HIGH FREQUENCY APPARATUS

Filed June 17, 1943 8 Sheets-Sheet 2

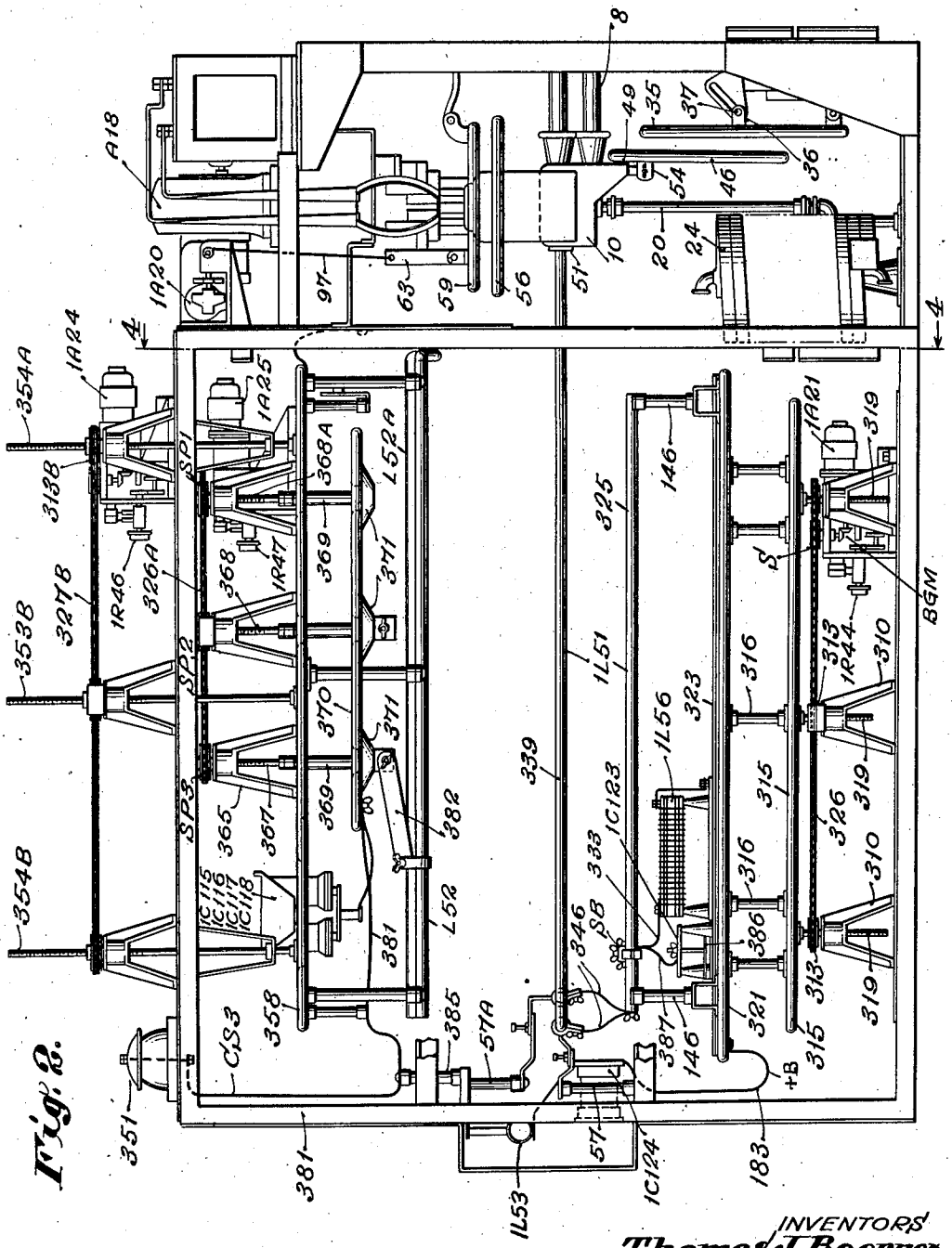

Fig. 2.

INVENTORS
Thomas J. Boerner
John W. Sanborn
by H. S. Grover
ATTORNEY.

Dec. 10, 1946. T. J. BOERNER ET AL 2,412,314

HIGH FREQUENCY APPARATUS

Filed June 17, 1943 8 Sheets-Sheet 3

Fig. 3.

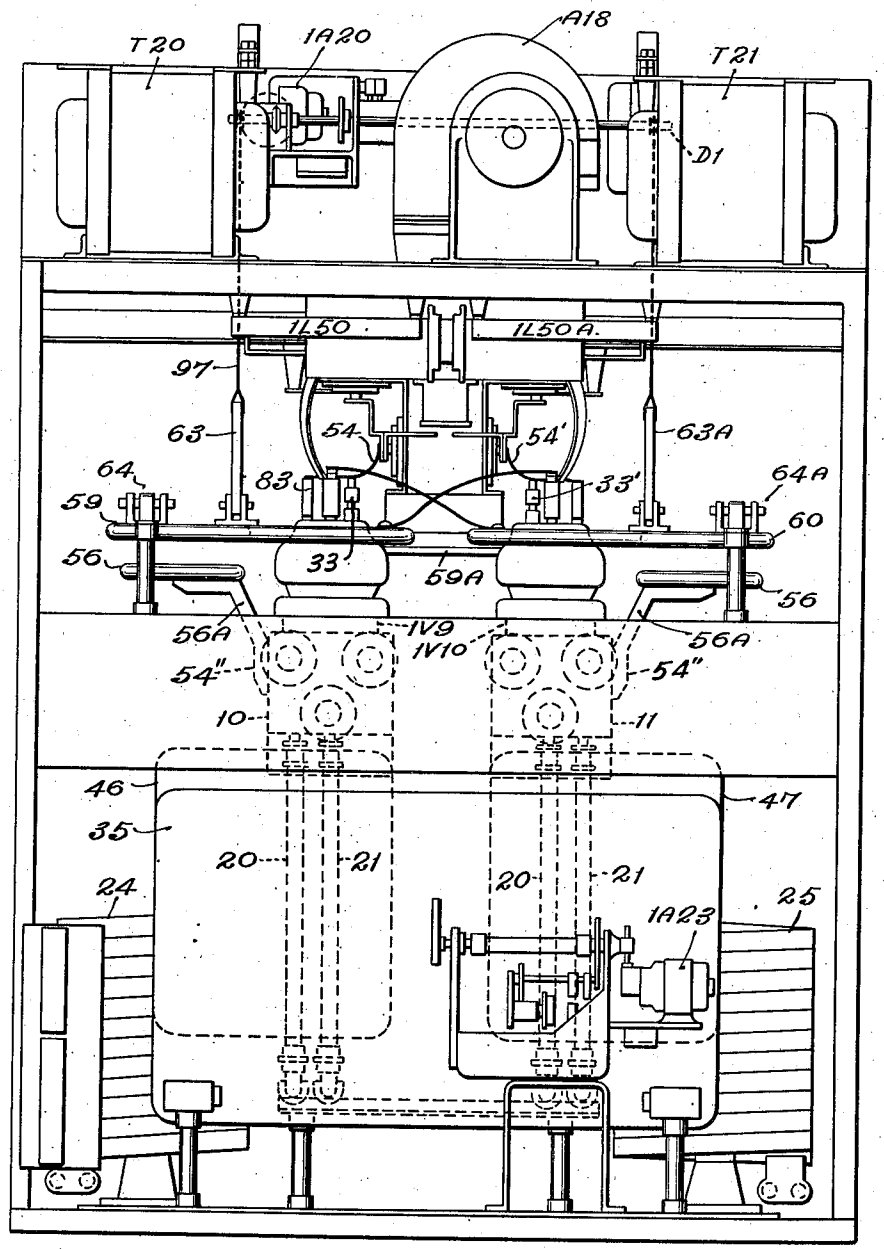

INVENTORS
Thomas J. Boerner
John W. Sanborn
By H. G. Grover
ATTORNEY

Dec. 10, 1946. T. J. BOERNER ET AL 2,412,314

HIGH FREQUENCY APPARATUS

Filed June 17, 1943 8 Sheets-Sheet 4

Fig. 4.

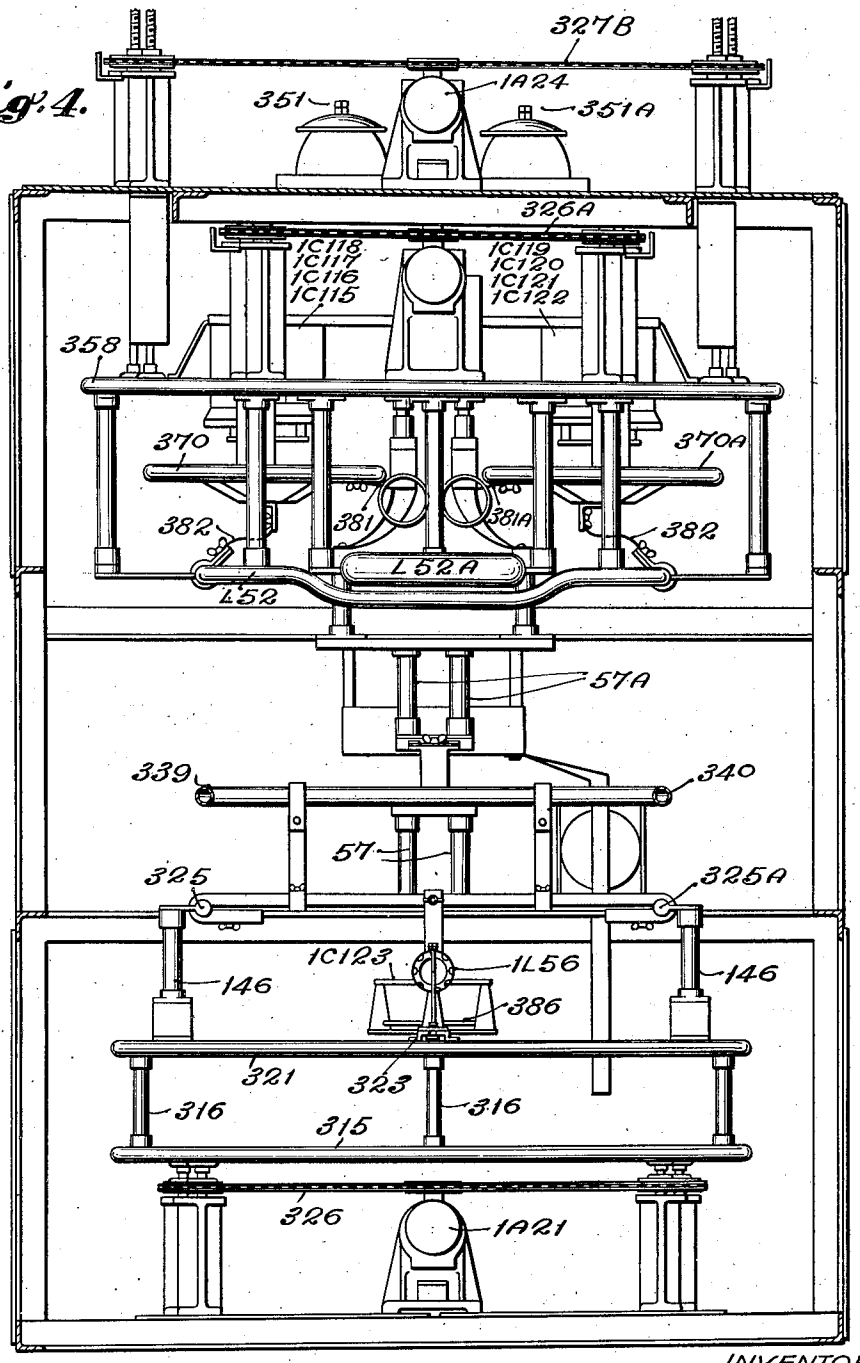

INVENTORS
Thomas J. Boerner
John W. Sanborn
By H. S. Grover
ATTORNEY.

Dec. 10, 1946. T. J. BOERNER ET AL 2,412,314

HIGH FREQUENCY APPARATUS

Filed June 17, 1943 8 Sheets-Sheet 5

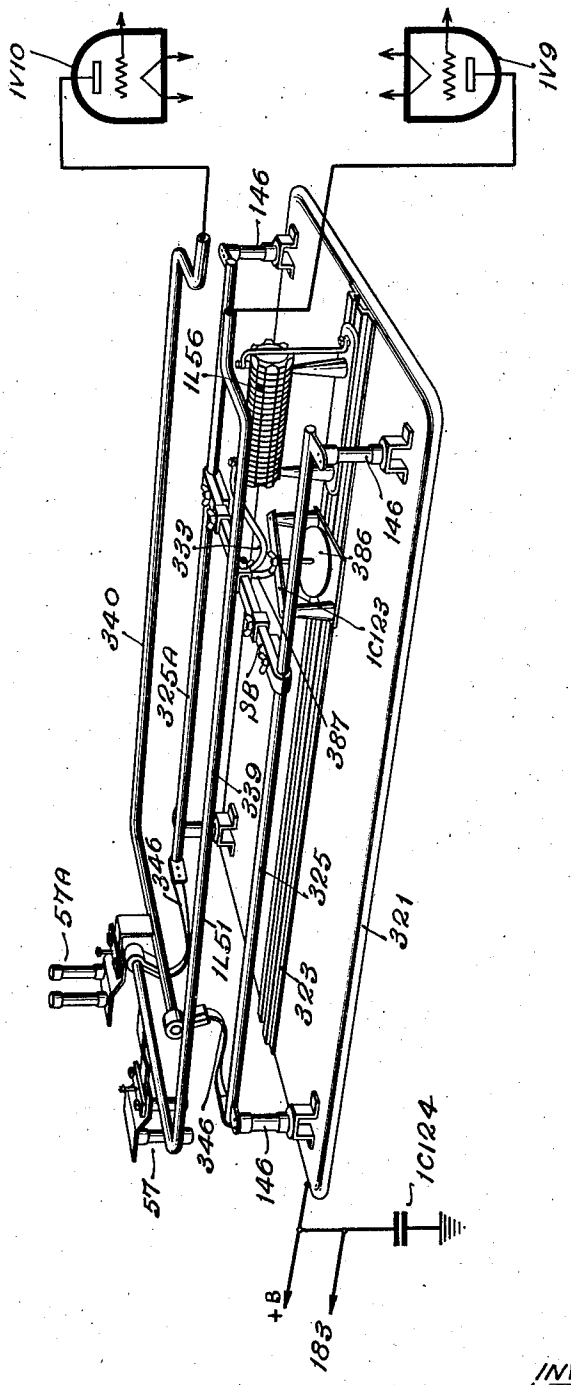

Fig. 5.

INVENTORS
Thomas J. Boerner
John W. Sanborn
by H. S. Grover
ATTORNEY.

Dec. 10, 1946. T. J. BOERNER ET AL 2,412,314

HIGH FREQUENCY APPARATUS

Filed June 17, 1943 8 Sheets-Sheet 6

Fig. 6.

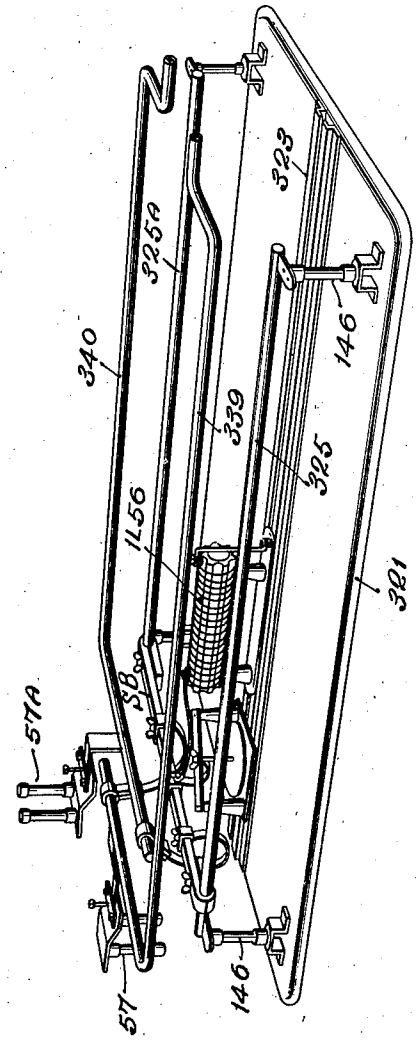

INVENTORS
Thomas J. Boerner
John W. Sanborn
by H. G. Grover
ATTORNEY.

Dec. 10, 1946. T. J. BOERNER ET AL 2,412,314

HIGH FREQUENCY APPARATUS

Filed June 17, 1943 8 Sheets-Sheet 7

Fig. 7.

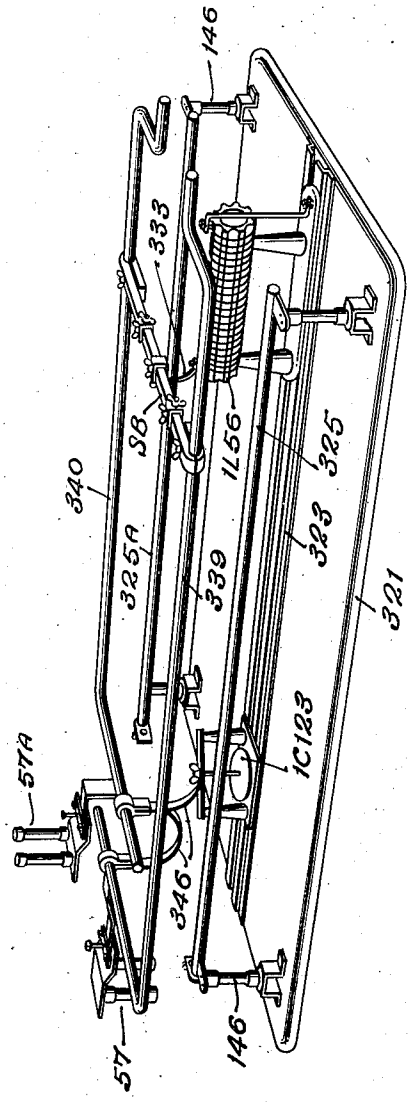

INVENTORS
Thomas J. Boerner
John W. Sanborn
by H. G. Grover
ATTORNEY

Dec. 10, 1946. T. J. BOERNER ET AL 2,412,314

HIGH FREQUENCY APPARATUS

Filed June 17, 1943 8 Sheets-Sheet 8

Fig. 8.

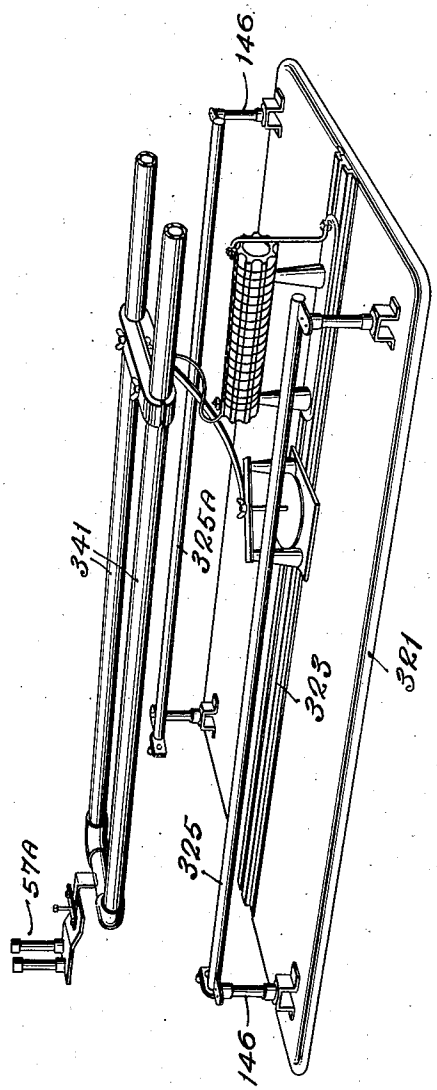

INVENTORS
Thomas J. Boerner
John W. Sanborn
By H. S. Grover
ATTORNEY

Patented Dec. 10, 1946

2,412,314

UNITED STATES PATENT OFFICE

2,412,314

HIGH-FREQUENCY APPARATUS

Thomas James Boerner, Collingswood, and John W. Sanborn, Merchantville, N. J., assignors to Radio Corporation of America, a corporation of Delaware

Application June 17, 1943, Serial No. 491,164

11 Claims. (Cl. 250—16)

1

This invention relates to high frequency apparatus and especially to the power amplifier stages of high frequency transmitters.

One object of the invention is to provide improved high frequency vacuum tube power amplifying apparatus and circuits which shall operate at high efficiency and in which spurious effects such as parasitic oscillations are minimized. A further object of our invention is to provide high frequency amplifying apparatus wherein the frequency of operation may readily and conveniently be changed.

A further object of the present invention is to provide an improved high frequency tank circuit for vacuum tubes. A feature of the tank circuit resides in an arrangement of fixed and relatively movable conductors which are so connected and arranged as to form a variable inductor for the tank circuit. In this regard provision is made for varying the spacing between the conductors of the inductor system, thereby varying the effective inductance connected into circuit.

A further object of the present invention is to provide an improved high frequency output circuit which may be employed with high frequency power amplifiers, generators and similar apparatus. An important feature of this output circuit resides in an arrangement whereby the tuning of the output circuit may be changed without altering the coupling to the circuit feeding it and whereby the aforementioned coupling may be varied without producing any substantial change in the tuning of the output circuit.

A further general object of the invention is to provide an improved electrical and mechanical arrangement of parts constituting the power amplifier of a high frequency transmitter, which arrangement may readily be adjusted for operation over a wide range of frequencies.

In brief, certain features of the present invention may be outlined as follows:

A push-pull connected vacuum tube driver stage is coupled through a condenser-divider arrangement to a push-pull connected vacuum tube power amplifier. The condenser-divider operates in such a way that over a wide range of operating frequencies substantially constant radio frequency excitation is applied to the grids of the power amplifier with constant direct current voltage impressed upon the plates of the driver tubes. In this connection it may also be mentioned that biasing circuits are provided for the grids of the power amplifier tubes which operate so as to

2

secure flow of equal grid currents over a wide operating range.

The tank circuit of the power amplifier generally consists of a pair of conductors fixed in position, having substantially uniformly distributed inductance and capacity and another pair of similar conductors insulatingly supported upon a movable metallic plate. These fixed and movable conductors having uniformly distributed electrical capacity and inductance are connected together by flexible straps. Mechanical instrumentalities are provided for moving the metallic plate upon which the movable conductors are mounted so that the effective separation of the conductors may be varied, thereby varying the effective inductance of the tank circuit. As the conductors of the tank are moved closer together, the inductance is increased and, similarly, as the separation between the conductors is increased the inductance of the tank circuit is decreased.

A final output circuit is provided coupled to the tank circuit. This final output circuit also makes use of conductors having substantially uniformly distributed inductance and capacity forming the effective inductance of the output circuit. Variable and fixed condensers are also provided which form part of the output circuit. The units of the output circuit are mounted as a single unitary assembly which may be variably coupled to the tank circuit without substantially changing the tuning of the output circuit and, furthermore, instrumentalities are provided for changing the tuning of the output circuit without substantially altering the coupling thereof with the tank circuit of the power amplifier.

Reversible electric motors are provided for adjusting neutralizing and tuning condensers of the power amplifier stage and output circuit. Further instrumentalities under control of other reversible electric motors are provided for adjusting the separation of the conductors of the tank circuit and, hence, the effective electrical inductance thereof and also for adjusting the coupling between the output circuit assembly and the tunable tank circuit. Limit switches are provided for the motors so as to prevent them from over-running in either direction. Instrumentalities are also provided whereby each reversible electric motor drives the variable arm of a potentiometer. Each potentiometer supplies voltage to a separate tuning indicator which may be in the form of a volt meter. In this way the tuning indicators give a measure, by the respective volt meter readings, of the capacity in circuit and in other cases the amount of cou-

pling or the amount of inductance in the power amplifier tank circuit.

In the drawings:

Figure 1 is a wiring diagram of a push-pull connected driver-amplifier stage feeding through a condenser-divider arrangement the grids of a pair of push-pull connected vacuum tube amplifiers of a high frequency power amplifier. As illustrated in Figure 1, reversible electric motors are provided for varying neutralizing and tuning condensers, the inductance of the tank circuit, and the coupling between the tank circuit of the power amplifier and the final output circuit to which the tank circuit is coupled;

Figure 2 is a side elevational view of apparatus constituting the power amplifier stage and output circuit of Figure 1;

Figure 3 is a front elevational view of the apparatus of Figure 2;

Figure 4 is a sectional view of the apparatus of Figure 2 looking against plane 4—4 of Figure 2; and

Figures 5, 6, 7 and 8 are detailed views of the tank circuit of the push-pull power amplifier as arranged for different frequency ranges of operation.

Referring to Figure 1, any carrier frequency within a range of, say, for example, 6 to 22 megacycles is fed into the primary coil 1L11 and thence into the secondary 1L13, exciting the control grids of tubes 1V7 and 1V8 in phase opposition. The carrier may be generated by any suitable vacuum tube generator followed by amplifiers and frequency multipliers. The secondary 1L13 is tuned by the split stator condenser 1C40. The amplified output of the driver stage consisting of tubes 1V7 and 1V8 appears in the tuned output circuit comprising coil 1L16 and condensers 1C101, 1C86, 1C87 and 1C104. The condensers are switched into the circuit as needed, depending upon the frequency employed.

In order to prevent spurious oscillations, the screen grids of the driver tubes 1V7 and 1V8 are by-passed to ground by condensers 1C46 and 1C47. For a range of lower frequencies, additional by-passing condensers 1C84 and 1C85 are also switched into the circuit, but are switched out of circuit in the range of higher frequencies. That is to say, condensers 1C47 and 1C46 will serve to give sufficient by-passing to ground at the higher frequencies since these condensers may be constructed integrally with the screen grid connections to the tubes.

Over the entire range of frequencies, however, neutralizing condensers 1C68 and 1C69, which may consist of sections of copper strap adjacent the anodes, are also employed. That is, these neutralizing condensers are employed in addition to the screen grids and their by-passing circuits to ground, over the entire operating range of frequencies. The use of such neutralizing circuits in addition to the screening circuits insures freedom from spurious oscillations and similar effects.

Coupling from the driver stage, including tubes 1V7 and 1V8, to the final power amplifier stage comprising water cooled tubes 1V9 and 1V10, is accomplished through capacitors 1C100, 1C48, 1C102, 1C103, 1C49 and 1C105.

The condensers 1C100, 1C48 and 1C102 are equal in value, respectively, to condensers 1C103, 1C49 and 1C105. The values of the upper three capacitors in parallel and the lower three are therefore equal; or, they may be used singly or in pairs so that the coupling capacities on both sides of the plate coil 1L16 are equal. In this way, proper voltage will be applied to the grids of the final power amplifier tubes for different operating conditions.

From the foregoing, it will be observed that the input capacity of the power amplifier tubes 1V9 and 1V10 form the low voltage legs of a condenser divider. Hence, as long as the radio frequency plate voltage of the driver stage is held constant, the condenser divider serves to maintain a correspondingly constant excitation voltage to the power amplifier across the power tubes of 1V9 and 1V10 over a very wide frequency range.

By virtue of the condenser divider tuning, the driver output stage can be adjusted over the entire frequency range without affecting the ratio of driver plate to power amplifier grid radio frequency voltage. Actually some fixed adjustment of the coupling capacitors of the voltage divider arrangement may be required. We have found that the entire range from six to twenty-two megacycles can be covered with three combinations of the condensers in the voltage divider with wide non-critical points of overlap. Further adjustment in the circuits may be made by means of the taps on coil 1L16 and by changing the position and coupling of a short-circuited turn 1L16A with respect to the turns of coil 1L16.

The grids of the power amplifier tubes are subjected to biasing action through the action of a common resistor 1R100 and the further resistors 1R100A. As indicated, one of the latter is connected in series with the grid of tube 1V9 and the other in series with the grid of the other tube 1V10 of the power amplifier. Also, it will be noted that chokes 1L50 and 1L50A and radio frequency by-pass condenser 1C130 have been provided in the grid circuit of the power amplifier stage. The grid circuit as described provides balanced grid currents over the entire range of frequencies employed.

Neutralizing condensers 1C107 and 1C106, which will be described in greater detail hereinafter, are provided for the power amplifier tubes 1V9 and 1V10. Also, as will be described more fully hereinafter, the tank circuit of the power amplifier comprises the inductance 1L51, tuning condenser 1C112, short-circuiting strap SB, condenser 1C123, by-passing condenser 1C124 and choke 1L56.

The loading or output circuit, which also will be described more fully hereinafter, comprises the inductor 1L52, tuning condenser 1C114 and fixed condensers 1C115 to 1C122 inclusive.

Motor-driven adjustment or tuning of various elements in the power amplifier stage and output circuit are provided. Thus, reversible electric motor 1A20 drives neutralizing condensers 1C106 and 1C107. Direction of rotation is controlled by switch 1S7. Limiting switches, diagrammatically indicated at 1S12 and 1S13, limit the amount of rotation of the motor in either direction. The angular position of motor 1A20 is indicated on a tuning indicator 1M13 which is in effect a voltmeter, the voltage of which depends upon the position of tap 40B upon potentiometer 1R43. The tap 40B is moved along the potentiometer 1R43 by the action of motor 1A20. In other words, motor 1A20 simultaneously varies condensers 1C106 and 1C107 and the position of tap 40B along potentiometer 1R43.

Similarly, reversible driving motors 1A23, 1A21, 1A24 and 1A25, switches 1S9, 1S8, 1S10 and 1S11, limiting switches 1S16, 1S17, 1S14, 1S15, 1S18,

IS19, IS20 and IS21, and indicators IM15, IM14, IM16 and IM17 are provided for adjusting and indicating the adjustment of condensers IC112, coupling between inductors IL51 and IL52 and condenser IC114. Supply voltage for the tuning indicating system is derived from the rectifier arrangement IA30. Motor driving power is furnished through leads 1B and 2A. The power supply to these leads may be, for example, 220 volts 60 cycles A. C. current.

The limit switches, such as IS12 and IS13, may be operated by cams, in turn operated or driven by reduction gearing coupled to the motor IA20, so that after a given number of revolutions in one direction, limit switch IS12 will be opened and after a given number of revolutions in the other direction limit switch IS13 will be opened. Similarly, the potentiometer and tap arrangement IR43 and 40B may be controlled by reduction gearing also coupled to the motor IA20, the tap being in contact with and moved over a circularly shaped potentiometer. Similar comments are applicable to the other limit switches and potentiometers controlling the tuning indicators T1. The latter are provided with by-passing condensers IC75 to IC79 inclusive.

A preferred electrical and mechanical arrangement of the various parts of the power amplifier system and output circuit are shown in Figures 2 to 8 inclusive. One feature of the arrangement consists in an assembly wherein the coupling of the output circuits comprising IL52 with the preceding circuit comprising IL51 may be varied without varying the tuning of the output circuit and wherein the tuning of the output circuit may be varied without changes in coupling.

As briefly stated before, Figure 2 is a side elevational view of the power amplifier assembly comprising tubes IV9 and IV10; Figure 3 is a front elevational view of Figure 2; Figure 4 is a sectional view of Figure 2; and Figures 5, 6, 7 and 8 illustrate arrangements and adjustments for the power amplifier tank circuit comprising IL51 for different frequency ranges.

Turning to Figure 3, radio frequency excitation from the driver stage is fed to the grids of the power amplifier tubes IV9 and IV10 at the grid input terminals 33, 83 and 33', 83'. Two leads to each grid are provided which are connected together and to external circuits at 54 and 54'.

The neutralizing condensers IC107 and IC106 of Figure 1 are illustrated in Figures 2 and 3 and are seen to comprise rounded or rectangular plates 56 directly attached to the tube anodes by means of brackets 56A and 56B. The variable plates of the neutralizing condensers are plates 59, 60 each of which is of U-shape, so as to partially surround each of tubes V9 and V10. These U-shaped plates 59, 60, fixed together by insulating strip 59A, are simultaneously rotated on hinges 64, 64A by the operation of the motor IA20. This follows since rotation of motor IA20 is translated into movement of condenser plates 59 and 60 by means of drum D1, cable 97 and insulating supporting anchors 63, 63A appropriately attached to the plate 59, 60.

Individual adjustment of the neutralizing condensers may be made by adjustment of the wing nuts (not shown) at points 54'', whereby the condenser plates 56 may each be independently adjusted with respect to the simultaneously moved condenser plates 59, 60. This can be done since the brackets 56A and 56B are slotted so that the condenser plates 56 may be moved

axially along and fastened in any desired position with respect to the vacuum tubes V9 and V10 and, of course, with respect to the movable condenser plate combination 59, 60.

The tank circuit condenser IC112 of Figure 1 is also illustrated in Figures 2 and 3. This condenser, as illustrated in the latter figures, includes the edge rounded, substantially rectangular plates 46 and 47. Plate 46 is independently adjustable with reference to the movable plate 35 and also with respect to tube V9 by means of hinge 49, and the slotted bracket and wing nut construction 54. By a similar arrangement of parts condenser plate 47 is made independently adjustable with reference to movable plate 35 and vacuum tube V10.

Plate 35 is adjusted by rotation of motor IA23 through gear reduction mechanism within the motor casing and bracket cam and slotted apparatus. The cam and slot apparatus is shown more clearly in Figure 2 at 36 and 37.

Cooling water is fed to the anodes of the vacuum tubes through the insulating coils 24, 25 which provide for direct current insulation from ground. The cooling water is also fed and removed through the straight sections of insulating pipe 20 and 21. The latter offer high impedance to and effectively insulate the tube plates from ground for radio frequency currents.

As shown in Figures 2, 4, and 8 the inductive portion IL51 of the tunable tank circuit of Figure 1 consists of metallic tubing 339, 340 and 341. This tubing 339, 340 and 341 is removably fixed to the anodes by means of the wing nut operated flanges 51.

Also, the inductor IL51 of Figure 1 may include for certain frequency ranges portions of the vertically movable inductors 325, 325A of Figures 2 and 4. This movable inductor portion 325, 325A is supported by stand-off insulators 146 upon an edge-rounded rectangular metallic plate 321 which is fed with plate voltage through conductive strap 183 (Fig. 2). Metal plate 321 in turn is insulatingly supported from a grounded metallic plate 315 by means of additional stand-off insulators 316.

Grounded plate 315 has attached thereto threaded spindles 319 cooperating with internally threaded sprockets 313, in turn supported by grounded metallic pedestals 310. Motor IA21 drives suitable gear reducing mechanism within the motor casing and the latter through bevel gear mechanism BGM and sprocket S drives chain 326. Chain 326 causes simultaneous operation of all of the sprockets 313, resulting in movement of the entire assembly upwardly or downwardly. This assembly includes ground plate 315, anode or "B" voltage plate 321, and the apparatus supported by rectangular plate 321 which apparatus includes inductor 325, condenser IC123 and choke coil IL56. The direction of rotation of motor IA21 and, hence, the direction of movement of the assembly depends upon the position to which switch IS8 of Figure 1 is thrown. Movement of the assembly changes the inductance between the bottom turn 325, 325A and the upper turn 339, 340 which is fixed in position and clamped as illustrated at 51 to the anodes of vacuum tubes V9 and V10. In this way, the total tank inductance is changed, decreasing as the assembly is lowered and increasing as it is raised and the turns 339, 340 and 325, 325A brought closer together. This change in inductance gives one control on the tuning on the tank circuit comprising IL51 of Figure 1. Another

control on or adjustment of this tuning has already been mentioned, namely, adjustment of IC112 under control of switch IS9 of Figure 1 and reversible motor IA23.

A better understanding of the manner in which the plate tank circuit inductance may be varied may be had by referring to Figures 5, 6, 7 and 8, which diagrammatically illustrate connections and adjustments for various frequency bands.

For example, Figure 5 illustrates the connections and adjustments of the inductive portion IL51 of the power amplifier plate circuit of Figure 1 for operation in a frequency range running approximately from 6.0 to 9.8 megacycles. As shown in Figure 5, the upper tank conductors 339, 340 are fixed in position and connected at their right hand terminals, as indicated diagrammatically, to the anodes of tubes IV9 and IV10. They are insulatingly supported by the insulating supports 57, 57A, as also illustrated in Figure 4. Also, as shown in Figure 5, the plate 321, corresponding to plate 321 of Figure 2, supports the stand-off insulators 146, inductors 325, 325A, condenser IC123, and choke coil IL56. Choke coil IL56 and condenser IC123 are movable within the guide 323 along the plate 321 and in this way can have one of their terminals connected to the adjustable short circuiting bar SB. The inductance IL51 of Figure 1, as illustrated in Figure 5, consequently may be traced from the plate of tube IV9 through conductor 339, the right hand flexible connector 346 to the right along conductor 325A, across metal bar SB electrically connected to and slidable along conductors 325 and 325A, then along inductor 325 to the left, through the left hand flexible strap 346 and then along conductor 340 to the plate of tube IV10.

The upper plate 386 of condenser IC123 of Figures 2 and 5 is connected by strap 387 to the short circuiting bar SB. The choke IL56 is connected to the short circuiting bar SB by strap 333 of Figures 2 and 5. The lower plate of condenser IC123 rests upon and is thereby directly connected to plate 321. The capacity of IC123 may be adjusted by moving the wing nut and pole arrangement supporting the upper condenser plate 386.

As shown in Figure 5, the inductance of the tank circuit of the power amplifier stage consists effectively of two turns, in which the bottom turn 325, 325A is moved relative to the fixed top turn 339, 340. This inductive system has been found useful for the range of frequencies running from 6.0 to approximately 9.8 megacycles. Obviously, for various frequencies within this range the position of the short circuiting bar on the inductors 325, 325A is changed and the separation of the turns 339, 340 and 325, 325A may be adjusted as before described.

For the frequency range running from 9.8 to 10.5 megacycles, the general arrangement of the parts and adjustments are illustrated in Figure 6. For this range the shorting bar SB is moved to the extreme left hand end of the lower inductors 325, 325A.

For a frequency range of from 10.5 to 13.8 megacycles, the lower inductance bars are not used at all, the straps 346 in that event being connected, as illustrated in Figure 7, to only the upper inductors 339, 340 and to the condenser IC123. The choke IL56 in this case has one of its terminals connected through strap 333 to the shorting bar SB, as shown. For still higher frequencies, namely, for example, for a range of frequencies running from 13.8 to 22 megacycles,

the arrangement is shown as illustrated in Figure 8. In that case, the lower inductors 325 and 325A are disconnected from circuit and the upper inductor system previously used is replaced by inductors 341 having a larger conductor diameter than the previously employed pipes or tubes 339, 340.

Referring to Figure 2, it will be found that the condenser plate arrangement 315, 321 improves stability and tends to lessen the setting up of parasitic oscillations. The plate voltage lead 183 is grounded for radio frequency currents by means of the condenser IC124, as illustrated more clearly in Figure 2.

The inductance of the output circuit IL52 of Figure 1 consists of a portion of the hairpin inductor L52 or L52A of Figures 4 and 2. The coil of the larger conductor size L52A is employed for the higher frequency range such as, for example, from 15 to 22 mc. The hairpins L52 and L52A which may, for example, consist respectively of one inch and two inch copper pipe, are selectively connected into circuit by the flexible connecting straps 382. As shown, L52 is connected into circuit. The fixed condenser tanks IC115 to IC122 inclusive of Figure 1 are similarly illustrated in Figures 2 and 4.

The variable plates of condenser IC114 of Figure 1 are illustrated in Figure 4 at 370 and 370A, each consisting of a substantially rectangular metallic plate having rounded corners and rounded edges. These movable condenser plates are provided with metallic dishpan supports 371 in turn supporting stand-off insulators 369 extending through rounded off perforations through the movable plates 370 and 370A. In this way electric stress on the stand-off insulators is reduced while at the same time permitting the movable plates 370 and 370A to be brought closer to the grounded plate 358. Rectangular grounded plate 358 extends across and is thereby capacitively coupled to both of the movable plates 370 and 370A. This is clear from an inspection of Figure 4.

Referring again to Figure 2, by means of motor IA25 and its reducing gearing driving the sprocket SP1, chain 326A and the remaining sprockets SP2, SP3, SP4, SP5 and SP6, the latter three being directly behind SP1, SP2, and SP3, condenser plates 370 and 370A are adjusted in a vertical direction. The sprockets are supported upon the pedestals 365 which in turn are fastened to the condenser plate 358. The sprockets are internally threaded and the threads thereof engage the threads on the spindles 367, 368, and 368A thereby causing movement of the movable plates 370 and 370A with respect to the common condenser plate 358 in a direction perpendicular to the planes of the condenser plates. From what has been said it should be clear that the spindle, sprocket and motor mechanism IA25, SP1, 368, etc., is similar to the spindle, chain and sprocket driving mechanism described for moving the plates 315, 321 and the apparatus supported thereby.

In a similar way motor IA24 operates the sprocket, chain and spindle mechanism 313B, 327B, 353B, 354B and 354A whereby the entire assembly of inductor unit IL52 and condenser IC114 is moved in a vertical direction. Hence, operation of motor IA25 controls the tuning of the output circuit independently of the coupling to the tank circuit, and operation of motor IA24 may be used to control the coupling of the output circuit to the plate circuit of the power ampli-

fier without altering the tuning of the output circuit comprising IC114. It is to be noted that movement of the output assembly also includes condenser IC115 up to and including IC122.

The output from the output circuit is taken through flexible conducting straps 381 and 381A to suitable terminals supported upon insulators 385. From the latter terminal a conductive strap CS3 brings the amplified high frequency waves to suitable insulatingly supported output terminals 351 and 351A as shown in both Figures 2 and 4.

As explained in connection with Figure 1, the various electric motors are mechanically coupled by reduction gearing and other mechanical instrumentalities to change tuning of condensers, coupling, etc. Also, additional gearing is provided whereby each motor mechanically drives the movable arm of a potentiometer which may be arranged in the form of a circle. For example, as shown in Figure 1, motor 1A21 drives rheostat arm 41B of potentiometer 1R44. The potentiometer arrangement is illustrated somewhat schematically to the left of motor 1A21 in Figure 2 at point 1R44. Similarly, for example, the potentiometer associated with motor 1A24 is illustrated at 1R46 in the upper part of Figure 2 and the potentiometer associated with electric motor 1A25 is illustrated at 1R47, also in Figure 2.

Other parts of the apparatus illustrated in Figures 2, 3 and 4 should be self-evident to those skilled in the art, for example, the steel framework of the system and filament transformers T20 and T21, blower motor A18 (Fig. 3—top), filament by-passing condensers IC108, IC109, etc., and IC125 of Figure 1. Also, it is to be noted that the grid chokes 1L50 and 1L50A of Figure 1 are illustrated in Figure 3, as is also condenser IC130. The stand-off insulators with corona shields 9 for the tube sockets 10 and 11 are illustrated at 8 in Figure 2.

Having thus described our invention, what we claim is:

1. A variable inductor arrangement comprising a pair of conductors mounted in relatively fixed position, another pair of conductors insulatingly mounted upon a metal plate, connections connecting said conductors serially together, and apparatus for moving said plate and said insulatingly supported conductors with respect to said fixed conductors whereby the inductance of the serially connected arrangement may be varied.

2. High frequency apparatus comprising a metallic plate, a pair of substantially linear conductors insulatingly supported upon said plate, an adjustable short-circuiting bar connected across said conductors, a condenser having one terminal connected to said short-circuiting bar and another terminal to said plate, a high frequency choke having one terminal connected to said bar and its other terminal to said plate, said choke and condenser being movable along said plate as said short-circuiting bar is moved along said conductors, a circuit for maintaining said plate at positive potential with respect to ground, a by-passing condenser connected between said plate and ground for maintaining said plate at ground radio frequency potential, another pair of substantially linear conductors arranged substantially parallel to said insulatingly supported linear conductors, connections for serially connecting together all of said conductors, and apparatus for moving said plate with respect to said fixed conductors in order to effectively vary the inductance of said serially connected conductors.

3. In a high frequency system, a pair of vacuum tubes each having an anode, a pair of linear conductors connected to said anodes, said anodes and linear conductors being supported in relatively fixed position, a second pair of linear conductors arranged parallel to said first pair, flexible connections between said conductors, said second pair of linear conductors being insulatingly supported upon a substantially rectangular metallic plate, a short-circuiting bar movable along and electrically connected to said pair of insulatingly supported conductors, a condenser connecting said short-circuiting bar to said metallic plate, a radio frequency choke coil connecting said metallic bar to said plate, a source of direct current voltage connected to said plate whereby direct current voltage is fed from said source to said plate and through said choke coil, short-circuiting bar, linear conductors, and the flexible connections therefor to said anodes, and a by-passing condenser connected between said metallic plate and ground for maintaining said plate at substantially ground radio frequency potential.

4. Apparatus as claimed in claim 3, characterized by the provision of mechanical apparatus driven by a reversible electrical motor for moving said plate and the conductors insulatingly supported thereon closer to and further away from said conductors which are relatively fixed in position, whereby the inductance of the circuit connected between said anodes may be varied.

5. In combination, a U shaped inductor, means for feeding high frequency energy thereto, a second U shaped inductor arranged parallel to the first, an output circuit connected to said second U shaped inductor, said second U shaped inductor being arranged so that the plane of its conductors is substantially parallel to the plane of the conductors of the first mentioned inductor, and mechanical apparatus under the control of a reversible electrical motor for producing relative movement of said inductors in a direction perpendicular to the planes of the conductors of said inductors.

6. High frequency apparatus comprising a looped conductor forming an inductance and a high frequency circuit coupled thereto, said circuit comprising another looped conductor forming an inductance, and a plurality of condensers electrically connected thereto, apparatus for adjusting the inductive coupling of said loops without substantially affecting the tuning of said circuit, and apparatus for adjusting the tuning of said circuit without substantially affecting the coupling between said looped conductors.

7. High frequency apparatus comprising a first looped conductor forming a first inductance, a second looped conductor forming a second inductance and arranged substantially parallel to the first, a grounded metallic plate of substantially rectangular shape upon which said second looped conductor is insulatingly mounted, a pair of condenser plates connected to opposite sides of said second mentioned conductor loop and being adjustably supported between said loop and said metallic plate, means for moving said oppositely connected condenser plates physically with reference to said grounded condenser plate, and means for moving said ground plate, movable plates and second conductor loop as a unit with respect to said first mentioned conductor loop.

8. Apparatus as claimed in claim 7, characterized by the fact that said movable condenser plates are moved by means of mechanical appa-

ratus under control of a reversible electrical motor and that similarly the apparatus is moved as a unit under control of other mechanical apparatus in turn under control of another reversible electrical motor.

9. High frequency apparatus comprising a grounded movable substantially rectangular metal plate having openings therein, insulators extending through and movably supported upon said plate, a pair of movable condenser plates supported by said insulators, apparatus for causing said movable plates to move in unison towards or away from said grounded plate, a U shaped conductor arrangement insulatingly supported upon said rectangular grounded metal plate, said movable plates being mounted between said inductor and said grounded plate and being connected to opposite sides of said inductor.

10. High frequency apparatus comprising an extensive metallic plate, a high frequency choke

coil insulatingly supported upon said plate, a direct current circuit connected to said plate for maintaining said plate at a high direct current voltage with respect to ground, means connecting one terminal of said choke to said plate and its other terminal to high frequency apparatus, a condenser having one terminal connected to ground, and means for connecting the other terminal of said condenser to said plate for maintaining the latter at ground radio frequency potential.

11. Apparatus as claimed in claim 10 characterized by the fact that said metallic plate is supported by stand-off insulators upon a second metallic plate arranged substantially parallel to said first mentioned plate, said second mentioned plate being electrically connected to ground.

THOMAS JAMES BOERNER.
JOHN W. SANBORN.