United States Patent [19]

Billow

[11] **3,918,718**

[45] **Nov. 11, 1975**

[54] **GOLF CLUB AND BALL POSITION MARKER**

[76] Inventor: **Kathryn S. Billow,** 102 Quinn, Severna Park, Md. 71146

[22] Filed: **Sept. 23, 1974**

[21] Appl. No.: **508,206**

[52] **U.S. Cl.**..... **273/162 D;** 273/32 A; 224/5 C

[51] **Int. Cl.**[2]..... **A63B 53/00;** A63B 57/00

[58] **Field of Search**..... 273/32, 162, 35 A; 224/5 C

[56] **References Cited**

UNITED STATES PATENTS

3,556,364 1/1971 Maretka..... 273/32 A

FOREIGN PATENTS OR APPLICATIONS

1,043,683 9/1966 United Kingdom..... 273/32 A

Primary Examiner—George J. Marlo

Attorney, Agent, or Firm—Scrivener Parker Scrivener and Clarke

[57] **ABSTRACT**

A golf ball position marker comprising a stretchable sleeve releasably engageable over the end of a golf club handle. The sleeve has sewed to at least one edge an end of a nonresilient flap which overlies the sleeve and carries the female half of a snap fastener, the male half of which is carried by the marker. To prevent stressing the sleeve, the flap has space whereby the user's thumb may squeeze the flap against the handle as the marker is unsnapped.

5 Claims, 5 Drawing Figures

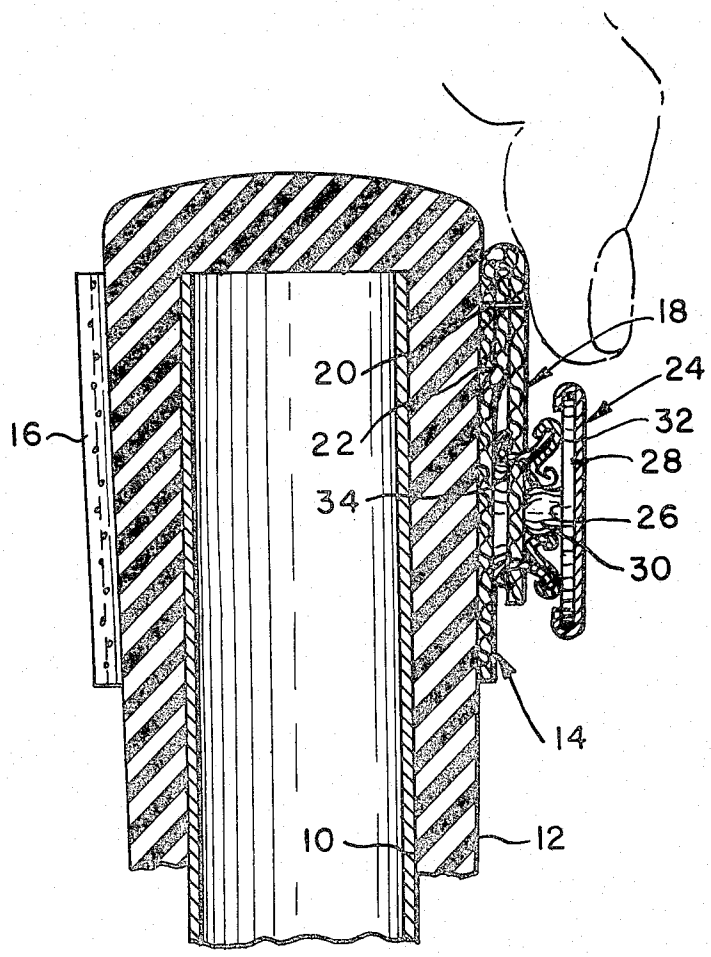

Fig. 1

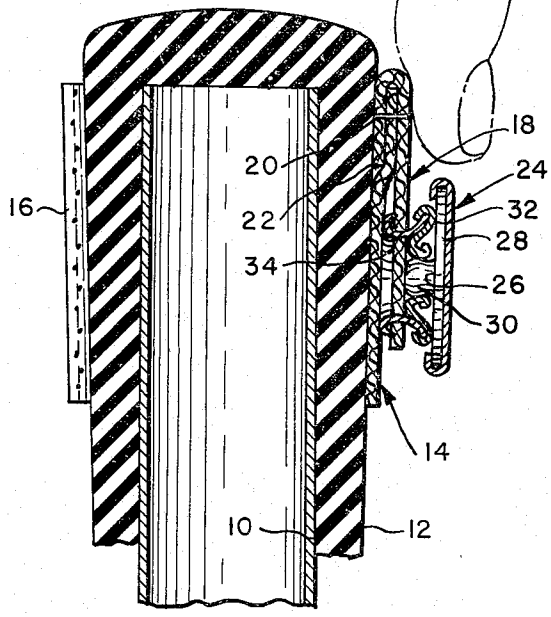

Fig. 2

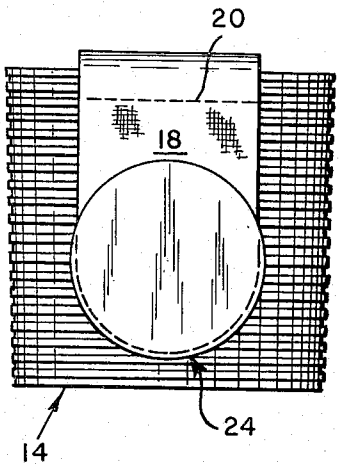

Fig. 3

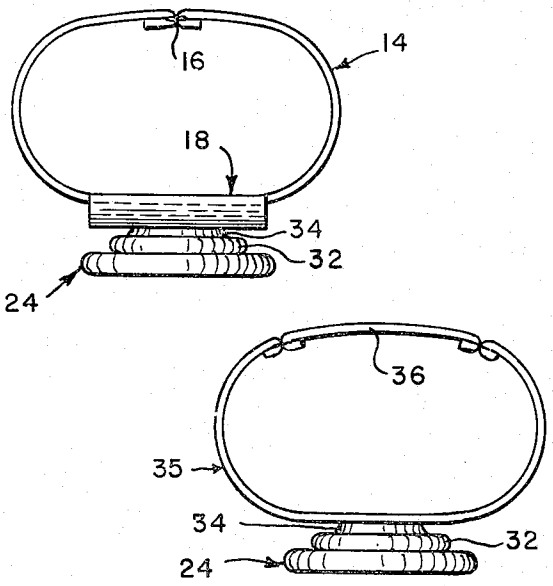

Fig. 4

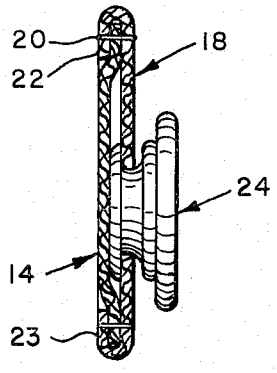

Fig. 5

GOLF CLUB AND BALL POSITION MARKER

This invention relates to markers for golf balls in a stymie position on a putting green and more particularly to improved means for releasably attaching a golf ball position marker to the handle of a golf club.

The need for golf ball position markers is well known and usually a player marks the position of his ball when in a stymie position on a green with a coin, preferably a dime. However, a player sometimes has no suitable coin, and, if a woman, she often has no convenient way to carry a coin. Accordingly, there have been made available on the market,carriers for markers which may be attached to a club handle, usually the putter, but the disadvantages of these markers are that they are unusually expensive for their simple task and most require alterations to or replacement of the golf club grip. Furthermore, the marker can be readily dislodged from the holders and lost.

The object of the present invention is to overcome the disadvantages of prior marker carriers by providing an inexpensive carrier which is readily attached to a club handle without requiring any alterations thereto and with a minimum possibility of losing the marker.

These and other objects will become apparent as the following detailed description is read in conjunction with the accompanying drawings wherein:

FIG. **1** is a vertical cross sectional view of a golf club handle showing the present invention in its position of use;

FIG. **2** is a front elevational view of the carrier of the invention;

FIG. **3** is a top plan of the carrier of the invention;

FIG. **4** is a vertical cross sectional view of a modification; and

FIG. **5** is a top-plan view of a further modification.

Referring now to the drawings, the numeral **10** designates a golf club handle carrying the usual grip **12. 14** designates a sleeve forming part of the invention and comprising commercially available stretchable elastic band material sewed together along abutting vertical seam-lines **16** to form a slightly tapering tube whose unstretched dimensions are slightly less than the tapering dimensions of the handle.

As best shown in FIG. **2** a flap or panel **18** is sewed by a horizontal line of stitching **20** to the upper edge of sleeve **14** on the side thereof opposite the vertical seam lines **16.** The flap **18** is preferably of strong,flexible but non-stretchable material such as leather or plastic sheeting, for example, polyvinyl chloride, and, as can be seen in FIG. **1,** the upper end part **22** of the flap is folded over the upper edge of the sleeve **14,** the line of stitching **20** passing through two thicknesses of the flap material with the sleeve material sandwiched there between.

Instead of a single line of stitching as in FIG. **2;** the flap can be extended so that its lower end can be folded over the lower edge of the sleeve and receive a second line of stitching **23** as shown in FIG. **4.**

A ball marker **24** is snapped to the lower end of the flap and comprises a disc **26** suitably covered on one side with a distinctive cover material **28** and carrying on the other side a male snap fastener part **30** comprising a conventional inwardly tapering boss releasably engageable withing the springy recess of a female part **32** of the snap fastener, the part **32** being attached to the flap in the usual manner by the use of a rivet element **34** comprising an annular flange having a plurality of prongs which pierce the material of the flap and are wedgingly engaged beneath the bent-over outer edges of the female part **32** as shown.

In use, the sleeve is attached to the club by being manually expanded until it can be slipped over the club end where, after it is lowered to a position slightly below the uppermost end of the club grip it is released to elastically clasp the grip as shown in FIG. **1.** Usually, and, in fact, almost invariably the club is the putter since this is substantially the only club with which the marker is likely ever to be used.

When a ball is on a putting green in a stymie position, that is, between the hole and an earlier player's ball, under the rules of golf the nearer ball must be moved and its position marked so that the player of the more distant ball may have a clear putt to the hole. The marker of the present invention is unsnapped from the flap by the user's first exerting with his thumb as shown in FIG. **1** an inward force on the flap above the marker so that the flap is firmly clamped against the club grip. The user then, with his other hand, unsnaps the marker, the force of the thumb preventing the unsnapping action from stretching the resilient sleeve each time the marker is removed which action would materially shorten the sleeve's useful life. Thus a feature of the invention resides in the disposition of the snap parts on the flap where ample space remains on the flap to accomodate the user's thumb for the purpose just described.

Instead of the flap being sewed to the upper and lower edges of the sleeve it could alternatively be sewed into the tube as a continuous part thereof as shown in FIG. **5.** Here the non-stretchable portion **35** of the tube carries the marker **24,** and the stretchable material comprises a panel or gusset **36** sewed along its vertical edges to the corresponding edges of the non-stretchable material **35.** Either the stretchable or non-stretchable portion of the tube could be the larger of the two.

When the marker is on the green the male snap fastener part extends into the grass slightly to resist inadvertent movement of the marker when ball is putted thereover.

Though the marker is particularly useful for use with clubs which are carried on carts with their handles upright, the sleeve works equally well with a putter placed in a bag with the putter handle down in the conventional manner. In this use, the double line of stitching or the gusset construction is preferred.

It will be apparent to those skilled in the art that the present invention is susceptible of a variety of changes and modifications without departing from the scope or spirit of the appended claims.

What is claimed is:

1. In combination, a golf club handle and a ball position marker carrier comprising a flexible sleeve member open at both ends, at least a part of which is stretchable elastic band material, said flexible sleeve member encircling said handle and having an unstressed diameter less than that of the handle by an amount enabling said sleeve member to be manually expanded to a size greater than the handle so as to be slidable thereover and when released to elastically clasp said handle for releasable retention thereon, a panel of flexible non-elastic material attached to said band material along at least one edge thereof and in a position that said panel lies parallel to the side of the club handle, and a ball

marker carrying on one side thereof a male snap fastener part, the female part of said fastener being carried by said panel in a position that when said marker is snapped thereon thumb space is provided on said panel clear of said marker, whereby said panel may be clamped against the side of said handle by a thumb to prevent stressing of said elastic material when said marker male part is unsnapped from said panel.

2. The combination of claim **1** wherein the entire sleeve member comprises stretchable elastic band material and said panel of non-stretchable material com-

prises a flap overlying said band material and attached to said band material along the upper edge thereof.

3. The combination of claim **2** wherein the flap is also attached to said band material along the lower edge thereof.

4. The combination of claim **1** wherein said golf club handle is tapered and said sleeve member is tapered to correspond to the taper of said handle.

5. The combination of claim **1** wherein the sleeve member comprises inter-connected panels of stretchable and nonstretchable material.

* * * * *