R. A. BECKER.

CABLE GRIP.

APPLICATION FILED NOV. 27, 1916.

1,263,020. Patented Apr. 16, 1918.

Fig. 1.

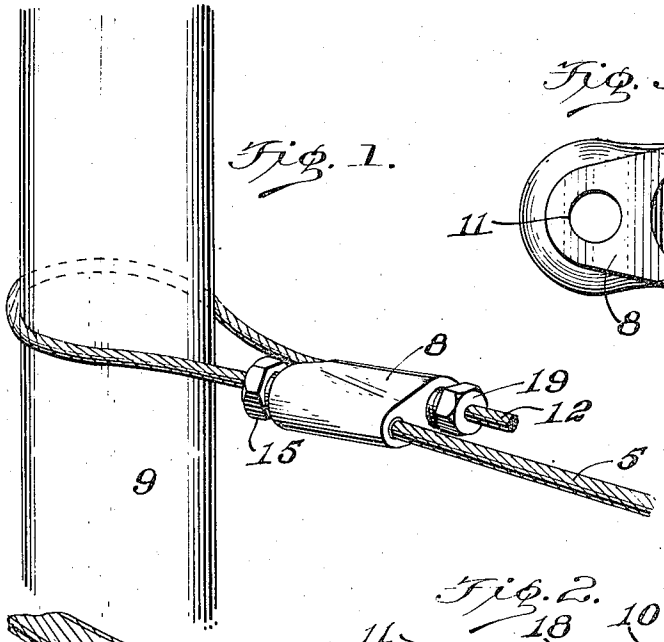

Fig. 3.

Fig. 2.

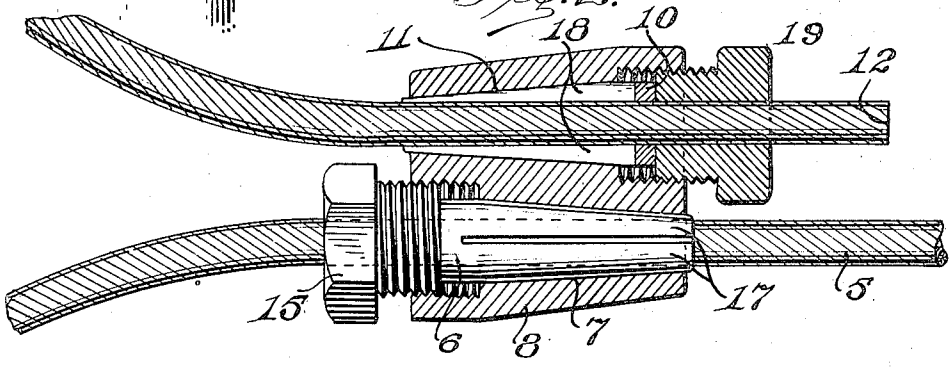

Fig. 4.

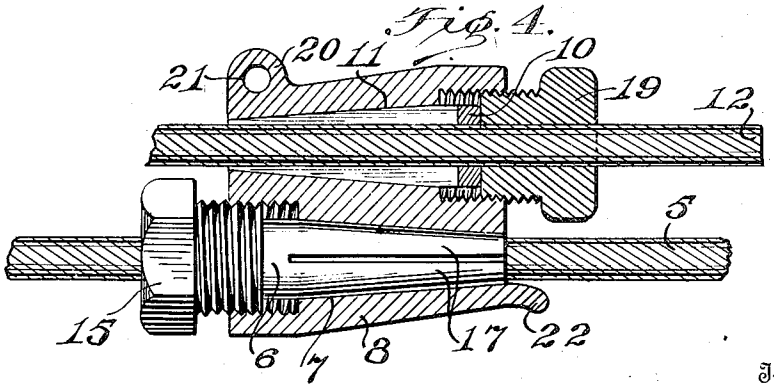

Inventor

Robert A. Becker,

Witnesses

W. S. McDowell

Thos. Freeman.

By J. Stuart Freeman.

Attorney

UNITED STATES PATENT OFFICE.

ROBERT A. BECKER, OF POUGHKEEPSIE, NEW YORK, ASSIGNOR TO CHARLES TREMAIN, OF POUGHKEEPSIE, NEW YORK.

CABLE-GRIP.

1,263,020. Specification of Letters Patent. Patented Apr. 16, 1918.

Application filed November 27, 1916. Serial No. 133,629.

To all whom it may concern:

Be it known that I, ROBERT A. BECKER, a citizen of the United States, residing at Poughkeepsie, in the county of Dutchess and State of New York, have invented certain new and useful Improvements in Cable-Grips, of which the following is a specification.

This invention relates to cable grips, connectors and splices, and is particularly adapted for use in lieu of the usual grips employed to secure the end portion of a guy rope around a pole, anchor, or other object, as for instance those used to support electrical conductors.

The respective parts of the usual grip, in general comprising two plates between which the end and intermediate portions of the guy rope or cable usually pass are secured together and in place by two or more bolts. To alter the tension of the guy rope, this grip must be entirely released and its hold upon the rope loosened, after which the body portion of the rope and its end portion are drawn through said grip in opposite directions, and the bolts thereof again tightened.

To tighten or loosen a guy rope equipped with this invention in its preferred form, either one or the other of the intermediate or the end portions of said rope is always held firmly, while the other of said portions is drawn through the device, thereby at all times preventing a greater slack in the rope than is desired; and, when thus changing the tension upon the rope, the same is at all times prevented from accidentally releasing its entire restraint upon the pole.

Another object of the invention is to provide an improved grip, comprising a casing provided with tapering channels having their axes substantially parallel, expansible gripping members slidably mounted within said channels, and adjustable means to force said members into said channels.

Various additional objects and details of the construction of the invention in its preferred forms are fully and clearly brought out in the following specification, when read in conjunction with the accompanying drawings in which Figure 1 is a perspective view of the clamp applied to a guy rope restraining a pole or other object; Fig. 2 is an enlarged horizontal sectional view of the preferred form of the clamp shown in Fig. 1; Fig. 3 is an end view of the same with the plugs removed; and Fig. 4 is a horizontal sectional view of a slightly modified form of the device.

Referring to the drawings, one of the principal uses for which this invention is peculiarly fitted is shown as being that in which it is employed to clamp a guy rope about a pole, or other object, upon which a strain is considered as existing in the opposite direction. The body, or intermediate, portion 5 of the rope extends through one of the expansible gripping members 6, which is in turn slidably mounted within the tapering channel 7 of the casing 8, and thence passing around the pole 9 and reversely through the other expansible gripping member 10, slidably within the other tapering channel 11 in said casing, said rope then terminating at a point such as indicated at 12.

The intermediate portion 5 of the guy rope is held firmly in place by the centrally apertured nut or plug 15, which, when screwed into the casing, forces the adjacent gripping member into place, its coöperation with the tapering walls 16 of the channel 7, contracting the yielding fingers 17 about said rope and firmly gripping the same. Similarly, the end portion of the rope is firmly gripped and held against longitudinal movement by the fingers 18 of the member 10, when the latter is forced into place between the walls of the channel 11 by a second centrally apertured nut or plug 19.

While the invention is not limited to the exact construction shown and described, it has been found advisable to direct the tapering channels within the clamp casing in opposite directions. Thus, it is readily obvious that the greater the pull or strain upon the guy rope 5, the greater is the tendency of it to positively draw the member 6 farther into its respective channel, contracting the former more and more, and in this way tending to increase its hold upon said rope, with the resulting unyielding retention of the same.

Likewise, the strain upon the end portion of the guy rope being toward the pole, the tendency is for the gripping member 10 to more firmly wedge itself into the channel 11, and thus decrease any chance of the es-

capement of the said end portion therefrom. To release the clamp entirely from the respective portions of the guy rope, the respective nuts or plugs 15 and 19, are loosened, and the gripping members 6 and 10 forced toward the larger ends of their respectively adjacent channels. The end and body portions of the rope can then be readily withdrawn from the device free from injury or mutilation in every way.

To take up or increase the tension of a guy rope equipped with the present device, the end portion of said rope is held as firmly as possible by the clamp and the grip of the latter upon the body portion is then released, after which the latter may be drawn through the clamp as far as desired and then regripped. To slacken the strain upon the rope, the opposite course is pursued until the desired tension is obtained, after which the clamp is tightened as before, and in which position the same will hold indefinitely, or until released.

In the construction shown in Fig. 4 the casing 8, greatly similar to the one hereinbefore described, is provided with an integral lug 20, apertured at 21 among other things to receive a second wire, rope, or cable (not shown) for the purpose of deflecting the resultant strain of a guy rope upon a pole from the actual alinement with the said guy rope's anchorage. The casing 8 is furthermore provided with an integral lip or shoulder 22 adjacent to the smaller ends of one or more of the tapering channels, and over which the guy rope 5 is able to curve without becoming sharply bent and thus tending to break the same, particularly as when a secondary strain is brought to bear through the apertured lug 20.

Having thus described my invention, what I claim and desire to protect by Letters Patent of the United States is:

1. A clamp, comprising a casing provided with a plurality of oppositely tapering bores, centrally apertured members slidable longitudinally within said bores and means engaging said casing and operative to actuate said members independently.

2. A clamp, comprising a casing provided with a plurality of substantially parallel oppositely tapering bores, centrally apertured yielding members slidable longitudinally within said bores, and means to independently actuate said members.

3. A clamp, comprising a casing provided with a plurality of substantially parallel oppositely tapering bores, centrally apertured yielding members slidable within said bores, and separate adjustable means operative to force said members through said bores.

4. A clamp, comprising a casing provided with a plurality of oppositely tapering bores having spaced substantially parallel axes, gripping members within said bores, and adjustable means operative to force said members through said bores to contract said members.

5. A clamp, comprising a casing provided with a plurality of oppositely tapering bores having spaced substantially parallel axes, centrally apertured gripping members within and engaging the walls of said bores, and adjustable means operative to force said members through said bores to contract said members about other members passing therethrough.

6. A clamp, comprising a casing provided with spaced oppositely tapering apertures, centrally apertured radially yielding gripping members slidable therein, and centrally apertured adjustable plugs operative to force said members through said tapered apertures, to contract said members about other members extending therethrough.

7. A clamp, comprising a casing having spaced tapering apertures, adjustable means within said apertures operative to grip members extending therethrough, and said casing being provided with an integral apertured lug upon the exterior surface thereof.

8. A clamp, comprising a casing having spaced tapering apertures, adjustable means within said apertures operative to grip members extending therethrough, and threaded plugs operative to force said means into said first-named apertures, and said casing being provided with an integral apertured lug upon its exterior surface and adjacent to one end thereof.

In testimony whereof I have affixed my signature in presence of two witnesses.

ROBERT A. BECKER.

Witnesses:

LAURENCE E. SHERWOOD,

ANNA G. W. DAYLEY.