(No Model.) 2 Sheets—Sheet 1.

P. J. SHAEFFER.

SASH BALANCE.

No. 456,437. Patented July 21, 1891.

Fig. 1.

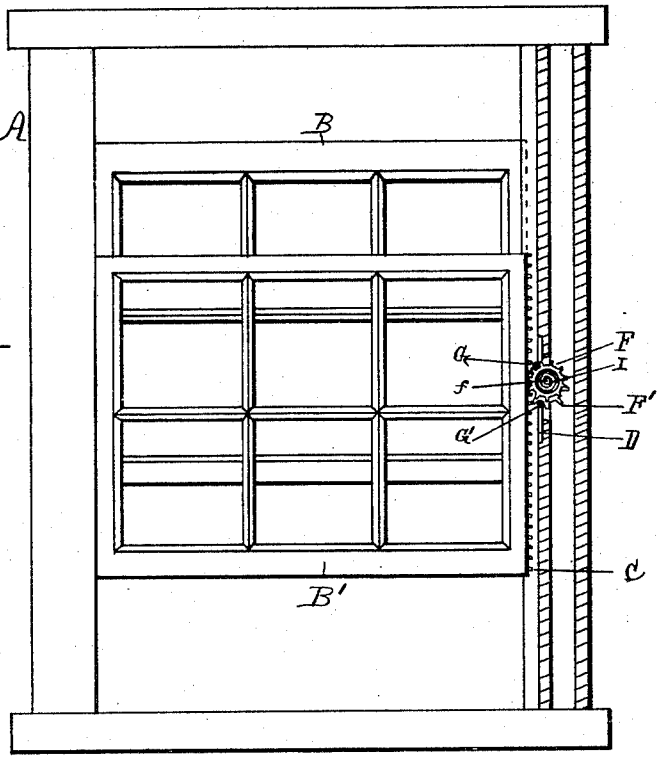

Fig. 2.

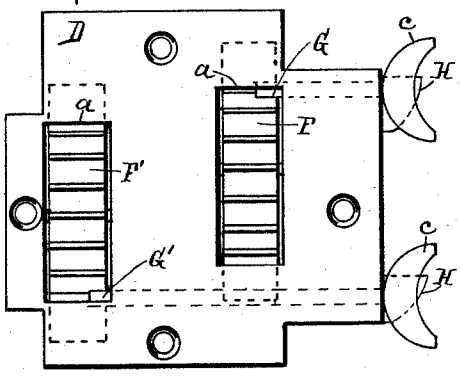

Fig. 3.

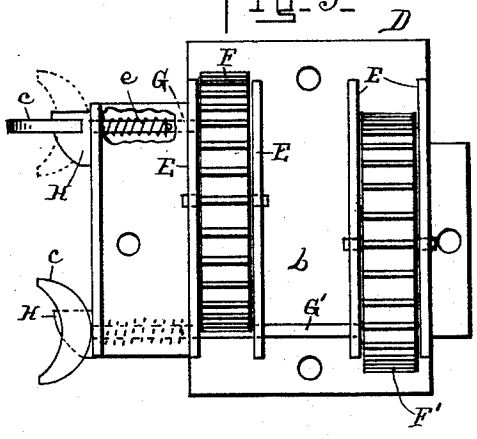

WITNESSES

Thos. Houghton.

Saml. D. Jacobson

INVENTOR

Philip J. Shaeffer

By Lewis Abraham

his Attorney.

THE NORRIS PETERS CO., PHOTO-LITHO., WASHINGTON, D. C.

(No Model.) 2 Sheets—Sheet 2.

P. J. SHAEFFER.

SASH BALANCE.

No. 456,437. Patented July 21, 1891.

Fig. 4.

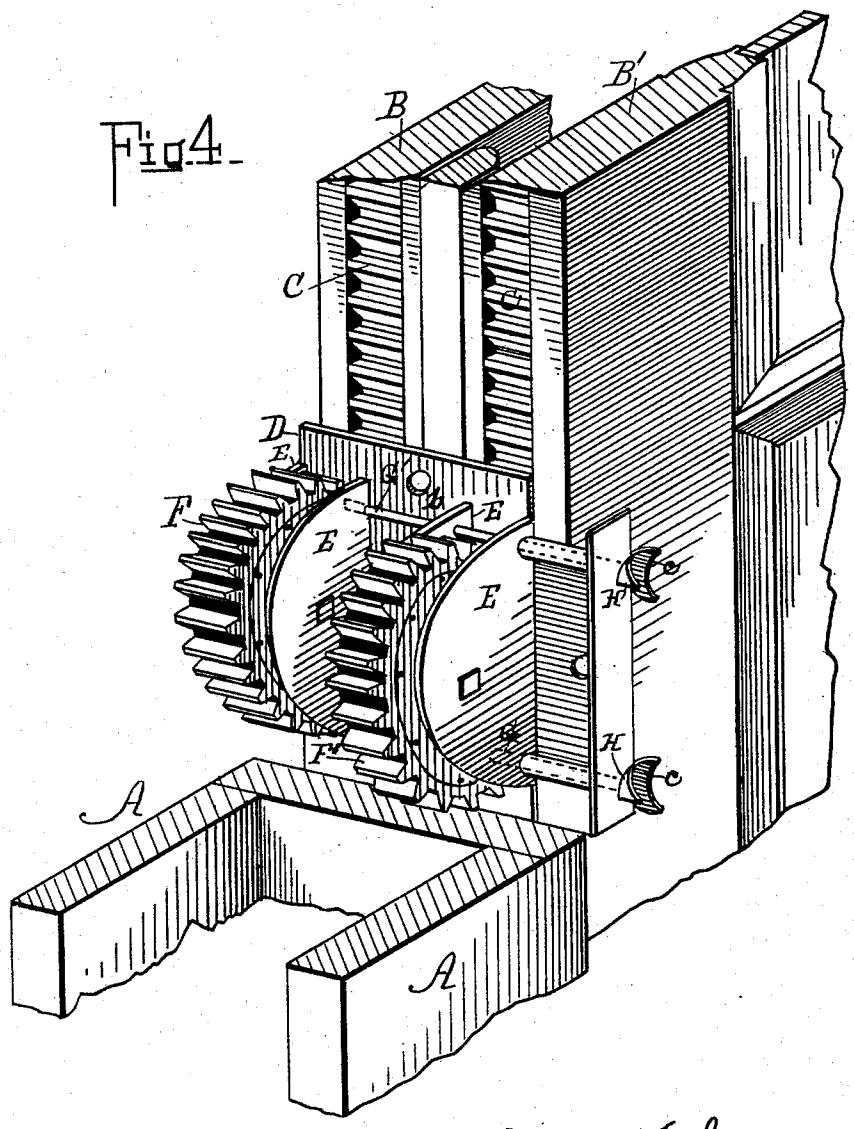

WITNESSES

Thos. Houghton.

Lamb. P. Jacobson

INVENTOR

Philip J. Shaeffer

By Lewis Abraham

his Attorney.

THE NORRIS PETERS CO., PHOTO-LITHO., WASHINGTON, D. C.

UNITED STATES PATENT OFFICE.

PHILIP J. SHAEFFER, OF PHILADELPHIA, PENNSYLVANIA, ASSIGNOR OF ONE-HALF TO LEON LAUDAUER, OF SAME PLACE.

SASH-BALANCE.

SPECIFICATION forming part of Letters Patent No. 456,437, dated July 21, 1891.

Application filed April 17, 1891. Serial No. 389,364. (No model.)

To all whom it may concern:

Be it known that I, PHILIP J. SHAEFFER, a citizen of the United States, residing at Philadelphia, in the county of Philadelphia and State of Pennsylvania, have invented certain new and useful Improvements in Sash-Balances; and I do hereby declare the following to be a full, clear, and exact description of the invention, such as will enable others skilled in the art to which it appertains to make and use the same.

My invention relates to sash-balances, and more especially to that class in which the sash is balanced by a spring-controlled cog-wheel which engages with a rack on the side of the sash.

The object of my invention is to provide a combined balance and lock, whereby one or both sashes may be raised or lowered or locked to any desired elevation, each sash independently of the other.

In the accompanying drawings, wherein like letters of reference point out similar parts on each figure, Figure 1 is an inside elevation of a window-frame, partly in section, with the upper and lower sashes partly open, having attached thereto a balance embodying my invention. Fig. 2 is a front view of my improved device as it appears when screwed fast to the window-frame. Fig. 3 is a rear view of the same. Fig. 4 is an enlarged side perspective view of the device, showing portions of the window-frame and the means of its connection thereto.

A designates a window-frame; B B′, the upper and lower sashes, respectively, and C a rack secured vertically to one side of each sash. Revoluble pulleys or any suitable guides may be attached to the opposite side of the sash to prevent transverse or lateral motion. In place of pulleys there may be beads or flanges to run within a groove in the frame-casing. As I lay no claim herein to such construction, it is not shown in the drawings.

D is the base-plate of the lock; E, brackets or supports for the two cog-wheels F F′; G G′, spring locking-bolts; H, cams attached to a leaf overturned at right angles from the base-plate, and I the springs within cog-wheels F F′. The base-plate is rectangular in form and provided with openings *a a*, through which the cog-wheels F F′ may project sufficiently to engage the teeth of the rack C. Brackets E are integral with the base-plate, and are upturned at right angles therefrom, and are in pairs, one pair being forward of the other, the forward one being slightly elevated above the rear one, so that the cog-wheel to operate one sash is extended sufficiently above the other to allow the locking-bolt G′ to pass clear of the forward cog-wheel and be enabled to lock and unlock the rear cog-wheel. Locking-bolts G G′ are spring-actuated, as shown in Figs. 3 and 4. One bolt is short, to lock and release the forward cog-wheel. The other is longer, so as to pass clear of the peripheral cogs of the front wheel and across the space *b* between the two wheels, as plainly shown in the drawings, whereby said longer bolt is adapted to be engaged with and be disengaged from the cogs of the rear wheel, which, as described and illustrated, is slightly depressed below the front wheel. Each locking-bolt is provided with a thumb-piece *c*, adapted to slide upon cams H, for the purpose of unlocking either one or both sashes independently.

I do not desire to limit myself to the described thumb-piece and cam at the end of the bolt. Any suitable extension on said bolt and a detent with which it will intermesh when brought into engagement will be within the scope and purview of my invention.

To open the window at the top or bottom the appropriate locking-bolt is withdrawn, whereby the released sash is free to move, so as to open or shut the window. When the sash is raised or lowered to the required position, the bolt-head is turned off its cam or detent. The spring *e* will force said bolt into engagement with its cog-wheel and lock the sash securely.

Each sash is provided with a rack, but there is only one base-plate with its two spring-balanced wheels. The axles or pivots of said wheels are not in the same horizontal plane. They are eccentric in reference to each other for the purpose of allowing the locking-bolt of one wheel to pass clear of the other, as hereinbefore set forth.

My improved sash-balance may be cheaply manufactured and sold to the trade as a new and improved article of manufacture.

In the manufactory the balances will be made to suit sashes of different heights and weights, so as to operate sashes of any size, width, or weight.

What I claim, and desire to secure by Letters Patent of the United States of America, is—

The within-described sash balance and lock, consisting of two spring-actuated cog-wheels F F′, each inclosed within pairs of brackets E E and adapted to turn on separate journals having bearings within said brackets, said journals being axially eccentric, respectively, to each other, each cog-wheel provided with a spring-controlled bolt to be independently withdrawn outwardly to permit each cog-wheel to revolve without interference with the other, the outer end of each bolt provided with projection to mesh with a cam or detent, whereby to stop and lock the respective cog-wheel at any stage of its revolution, all in combination with rack attached to the outer side of the sash, substantially as described.

In testimony that I claim the invention above set forth I affix my signature in presence of two witnesses.

PHILIP J. SHAEFFER.

Witnesses:
HENRY M. LAUDAUER,
ISAAC REINSTINE.