May 4, 1965 J. C. KOCI ETAL 3,182,141

ACTUATING MECHANISM FOR A THUMBWHEEL TYPE SWITCH

Filed July 25, 1963

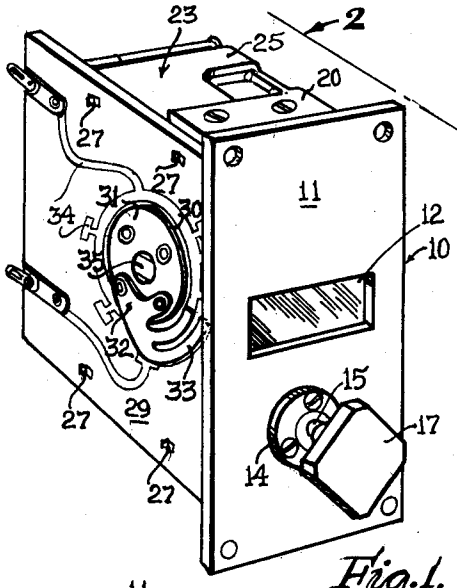

Fig. 1.

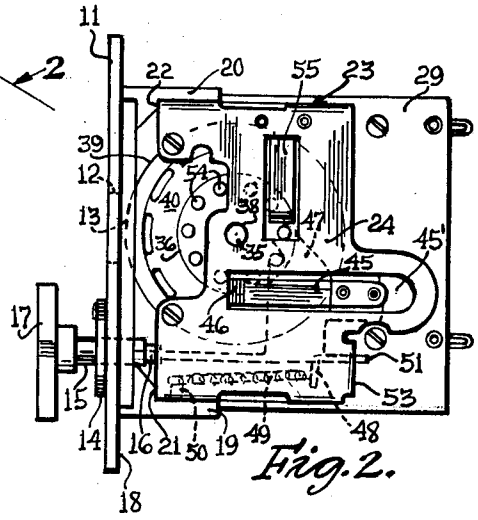

Fig. 2.

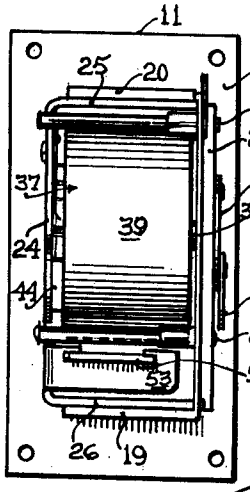

Fig. 3.

Fig. 4.

INVENTOR.
JERRY C. KOCI
STANFORD M. HEIDE &
BY ALFRED HOLZ
Edward C. Threedy
ATTORNEY.

United States Patent Office

3,182,141

Patented May 4, 1965

3,182,141

ACTUATING MECHANISM FOR A THUMBWHEEL TYPE SWITCH

Jerry C. Koci, Barrington, Ill., Stanford M. Heide, Kenosha, Wis., and Alfred Holz, Chicago, Ill., assignors to Chicago Dynamic Industries, Inc., Chicago, Ill., a corporation of Illinois

Filed July 25, 1963, Ser. No. 297,568
5 Claims. (Cl. 200—17)

This invention relates to a new and useful improvement in a thumbwheel type switch and more particularly to an electric switch which includes a switch position indicating drum and a mechanism for successively actuating both the switch and indicating drum.

A particular object of this invention is to provide in an apparatus of this character a means whereby the thumbwheel type switch may be caused to be rotatably actuated by an external push button or actuator for selectively energizing an electric circuit.

A still further object of this invention is to provide in an apparatus of this character a means for effecting positive switching operation of a rotatable switch blade over a fixed printed circuit plate.

A still further object of this invention is to provide in an apparatus of this character an indexing means for positioning both the rotatable switch blade and the switch position indicating drum.

Yet another object of this invention is to provide in an apparatus of this character an actuating mechanism that is simple and economical in manufacture, yet effective and highly positive in operation.

Other objects will appear hereinafter.

The invention consists in the novel combination and arrangement of parts to be hereinafter described and claimed.

The invention will be best understood by reference to the accompanying drawings showing the preferred form of construction, and in which:

FIG. 1 is a perspective view of the improved thumbwheel type switch;

FIG. 2 is a side elevational view of the same;

FIG. 3 is a rear elevational view of the thumbwheel type switch;

FIG. 4 is a perspective view of the components of the switch in exploded relation with respect to each other.

The thumbwheel type switch of this invention includes a housing 10 comprising a front wall panel 11 which provides a transparent window 12 through which a portion of the switch position indicating wheel 13 is viewed. The front wall panel 11 provides a suitable bushing 14 through which slidably projects the free end 15 of a switch actuator lever 16. The free end 15 of the actuator 16 is provided with a suitable push button 17, which, as is shown, may be mounted in spaced relation to the face of the front wall panel 11.

As seen in FIGS. 2 and 4, the rear face 18 of the front wall panel 11 provides spaced apart shelves 19 and 20. These shelves 19 and 20 have recessed shoulders 21 and 22 which cooperate with the shelves 19 and 20 to properly position and support the associated components of the switch with respect to the front wall 11 in a manner hereinafter described.

A U-shaped mounting bracket 23 is provided which comprises a vertically disposed medial body portion 24 terminating into horizontally disposed parallelly extending spaced apart arms 25 and 26. The free edges of each of the arms 25 and 26 are provided with connecting points 27 which are adapted to be projected through suitable apertures 28 formed in a side wall 29. Each of these points 27 are forced apart after they are projected through the apertures 28 formed in the side wall 29 as

seen in FIG. 1 so as to fixedly connect the side wall 29 to the free edges of the arms 25 and 26, and in a spaced parallel relation to the medial body portion 24 of the bracket 23.

The side wall 29 has formed therein a circular opening 30 into which is freely placed a rotatable disc 31. This disc 31 carries a switch bracket 32 which provides a pair of arcuated switch fingers 33, the free ends of which are adapted to be rotated over and in contact with printed circuit components 34 carried by the one surface of the side wall 29, as seen in FIG. 1. The switch disc 31 is mounted on the rectangularly shaped end of a supporting shaft 35 which shaft 35 extends through a hub 36 of a switch positioning and indicating drum 37.

The opposite free end of the shaft 35 is freely journaled in an opening 38 formed in the medial body portion 24 of the U-shaped bracket 23 as seen in FIGS. 2 and 4.

The switch positioning and indicating drum 37 consists of a plastic peripheral flange 39 radially supported by one side wall 40 from the small inner hub 36. The flange 39 bears digital indicia on the exposed surface thereof which indicia are adapted to be viewed through the window 12 formed in the front wall panel 11 of the housing 10. The small center hub 36 provides a bushing 41 by which the drum 37 is fixedly attached to the shaft 35 so as to rotate the shaft when the drum 37 is rotated by a rotating means hereinafter described.

The drum rotating means includes the switch actuator 16 which is provided with a laterally extending horizontally disposed shoulder 42 which in turn supports an upstanding flange 43. This flange 43 has a rearwardly projecting member 44 which has connected at one side thereof one end of a stepping pawl 45. This stepping pawl 45 is made from a flat piece of spring material and has its free end 46 angled in the direction of the hub 36 when these components are assembled together as shown in FIGS. 2 and 3. The flange 43 has one edge thereof formed to provide an indexing finger 47. This index finger 47 is adapted to extend tangently with respect to the hub 36 of the drum 37 for a purpose hereinafter made apparent.

On the underside of the actuator 16 there is provided a depending lug 48 to which one end of a coil spring 49 is attached. The inner face of the arm 26 of the U-shaped mounting bracket 23 is likewise provided with an upstanding lug 50 normally spaced horizontally from the lug 48 provided by the actuator 16. The other end of the coil spring 49 is attached to this latter lug 50 and thus functions to yieldably maintain the switch actuator 16 in its normal position as shown in the drawings.

The actuator 16 provides a guide in the form of a tail 51 which is adapted to be slidably contained in a guide slot 52 formed in a rear wall portion 53 provided by one side edge of the arm 26 of the bracket 23.

The center hub 36 of the drum 37 has one face thereof provided with a plurality of circular pins 54 radially disposed about and extending axially with respect to the shaft 35. These pins 54 are adapted to be engaged by the free angled end 46 of the stepping pawl 45 as it is reciprocally moved by the switch actuator 16 so as to rotate the drum 37 in a clockwise direction as seen in FIGS. 2 and 4.

In assembling the thumbwheel type switch, the parts of which have been hereinafter described, the drum 37 is mounted between the bracket 23 and the side wall 29. The switch actuator 16 is mounted adjacent to the inner face of the bottom arm 26 of the bracket 23 for guided horizontal movement tangentially with respect to the drum 37. This subassembly unit is then mounted on the front wall panel 11 by having the spaced apart arms 25 and 26 of the bracket 23 placed on to the shelves 19 and 20 with

their horizontal edges abutting the shoulders 21 and 22 provided by such shelves with the free end 15 of the actuator projecting through the bushing 14 carried by the front wall panel 11, as shown by FIG. 2. By any suitable means, the arms 25 and 26 are fixedly connected to shelves 19 and 20.

In operation, the switch actuator 16 is caused to move from left to right, as shown in FIG. 2, inwardly of the switch housing 10 and against the yieldable action of the coil spring 49. This movement of the actuator 16 is guided and maintained in a horizontal plane by having the tail 51 of the actuator 16 move through the guide slot 52 formed in the rear wall portion 53 as provided by the bottom arm 26.

As viewed in FIG. 3, it is apparent that in the assembling of the components of the thumbwheel type switch consideration has been given to size and space. Thus it should be noted that most of the movable parts of the switch are in close proximity to each other. The laterally extending pins 54 are minutely spaced from the inner surface of the medial body portion 24 of the bracket 23 and are of a length equal to the width of the upstanding flange 43 provided by the actuator. Thus to accommodate the spring pawl 45 in its reciprocal movement, the medial body portion 24 is provided with an elongated slot 45' through which the spring pawl 45 is adapted to move.

As the actuator 16 is so moved the spring pawl 45 will move away from and out of engagement with one of the pins 54 carried by the hub 36. At the same time, the indexing finger 47 will move from between two juxtaposed pins 54 (from the position as seen in FIG. 2), tangently with respect to the hub 36. At the same time the drum 37 is prevented from accidental rotation in either direction by a yieldable locking finger 55 which is connected to the inner surface of the medial body portion 24 of the mounting bracket 23 in such a manner that the free end thereof is yieldably positioned between certain of the pins 54 carried by the hub 36, as seen in FIG. 2. At the same time the top edge portion of the angled end 46 of the pawl 45 has moved beneath one of the circular pins 54 and cooperates with the locking finger 55 to prevent rotation of the drum 37 about the shaft 35. When the actuating force is removed from the actuator 16, the coil spring 49 will function to return the actuator 16 to its original position. This reciprocal movement of the actuator 16 will cause the drum 37 to be rotated in one direction. This rotation is the result of the horizontal movement of the pawl 45 which has its angled end 46 in engagement with a successive pin 54 provided by the hub 36. As the actuator 16 returns to its normal position, the pawl 45 will cause the rotation of the drum 37. The rotation of the drum 37 by the actuator 16 is arrested by the indexing finger 47 which moves back into its position shown in FIG. 2 where it will engage one of the pins 54 of the hub 36 and prevent further rotation of the drum 37.

The step by step rotation of the drum 37 moves the switch fingers 33 over the printed circuit components 34 formed on the side wall 29. It will also result in the indicia as carried on the flange of the drum 37 to be moved into alignment with the window 13 so as to indicate what electric circuit has been completed by the movement of the switch fingers 33.

While we have illustrated and described the preferred form of construction for carrying our invention into effect, this is capable of variation and modification without department from the spirit of the invention. We, therefore, do not wish to be limited to the precise details of construction set forth, but desire to avail ourselves of such variations and modifications as come within the scope of the appended claims.

Having thus described our invention, what we claim as new and desire to protect by Letters Patent is:

1. In combination a rotatable thumbwheel type electrical switch including a switch disc having contact fingers rotatable step by step over a printed circuit,

(*a*) a housing for said switch providing a front wall having a transparent window formed therein and one side wall supporting the switch disc and having on its exterior surface the printed circuit,

(*b*) a U-shaped mounting bracket connected to the one side wall of said housing,

(*c*) a switch disc position-indicating wheel within said housing between said U-shaped mounting bracket and the one side wall thereof,

(*d*) said wheel consisting of a hollow open sided drum provided with an enlarged hub,

(*e*) a rotatable shaft fixedly connected to said hub rotatably supporting said wheel within said housing between said mounting bracket and said one side wall,

(*f*) said hub providing radially disposed pins extending axially with respect to said shaft and in spaced relation to said drum,

(*g*) actuating means within said housing between said mounting bracket and said one side wall for rotating said wheel and said shaft in one direction,

(*h*) said means providing an elongated driving pawl having a wheel rotating portion and a wheel indexing portion, each of which is in contact with certain of said pins provided by said hub of said drum,

(*i*) said wheel rotating portion including a yieldable stepping pawl having its free end bent out of the longitudinal plane of said pawl in the direction of and in contact with one of said pins on said hub,

(*j*) said wheel indexing portion comprising a finger vertically disposed with respect to said stepping pawl engageable with another of said pins provided by said drum so as to control the distance of rotation of said wheel in one direction by said actuating means,

(*k*) and an actuator extending through the front wall of said housing and connected to said actuating means for reciprocally and simultaneously moving said wheel rotating portion and said wheel indexing portion of said actuating means in a lineal direction tangentially with respect to said hub into and out of engagement with successive pins thereof to step by step rotate said wheel in one direction through said housing.

2. In combination a rotatable thumbwheel type electrical switch as defined by claim 1 wherein there is included spaced apart mounting means carried by said front wall to either side of said window formed therein for receiving therebetween the spaced apart parallel legs of said U-shaped mounting bracket for connecting the same thereto and for positioning said wheel relative to said window.

3. In combination a rotatable thumbwheel type electrical switch as defined by claim 1 and including guiding means provided by said U-shaped mounting bracket beneath the periphery of said drum and extending parallel to the said shaft for receiving and guiding a portion of said actuating means as it moves reciprocally through said housing.

4. In combination a rotatable thumbwheel type electrical switch including a switch disc having contact fingers rotatable step by step over a printed circuit,

(*a*) a housing for said switch providing a front wall having a transparent window formed therein and one side wall supporting the switch disc and having on its exterior surface the printed circuit,

(*b*) a U-shaped mounting bracket connected to the one side wall of said housing,

(*c*) a switch disc position-indicating wheel within said housing between said U-shaped mounting bracket and the one side wall thereof,

(*d*) said wheel consisting of a hollow open sided

drum provided with an enlarged hub spaced from and within the periphery thereof,

(*e*) a rotatable shaft fixedly connected to said hub rotatably supporting said wheel within said housing between said mounting bracket and said one side wall,

(*f*) said hub providing radially disposed equally spaced pins extending axially with respect to said shaft and in spaced relation to the periphery of said drum,

(*g*) actuating means within said housing between said mounting bracket and said one side wall for rotating said wheel and said shaft in one direction,

(*h*) said means providing an elongated driving pawl having a wheel rotating portion and a wheel indexing portion, each of which is in contact with certain of said pins provided by said hub of said drum,

(*i*) said wheel rotating portion including a yieldable stepping pawl having its free end bent out of the longitudinal plane of said pawl in the direction of and in contact with one of said pins on said hub,

(*j*) said wheel indexing portion comprising a finger vertically disposed with respect to said stepping pawl engageable with another of said pins provided by said drum so as to control the distance of rotation of said wheel in one direction by said actuating means,

(*k*) and an actuator extending through the front wall of said housing and connected to said actuating means for reciprocally and simultaneously moving said wheel rotating portion and said wheel indexing

portion of said actuating means in a lineal direction tangentially with respect to said hub into and out of engagement with successive pins thereof to step by step rotate said wheel in one direction through said housing, and

(*l*) spaced apart mounting means carried by said front wall to either side of said window formed therein for receiving therebetween the spaced apart parallel legs of said U-shaped mounting bracket for connecting the same thereto and for positioning said wheel relative to said window.

5. In combination a rotatable thumbwheel type electrical switch as defined by claim 4 incldiung guiding means provided by said U-shaped mounting bracket beneath the periphery of said drum and extending parallel to the said shaft for receiving and guiding a portion of said actuating means as it moves reciprocally through said housing.

References Cited by the Examiner

UNITED STATES PATENTS

691,557	1/02	Leve	200—64
775,055	11/04	Waterman	200—64
1,258,254	3/18	Robertson	200—105
2,260,592	10/41	Winning	200—11
3,104,299	9/63	Koci et al.	200—156

BERNARD A. GILHEANY, *Primary Examiner.*

ROBERT K. SCHAEFER, *Examiner.*