Oct. 12, 1948. W. B. CRANE 2,450,941

SHIPPING, STORAGE AND DISPLAY CARTONS

Filed Aug. 25, 1943 3 Sheets-Sheet 1

Fig. 1

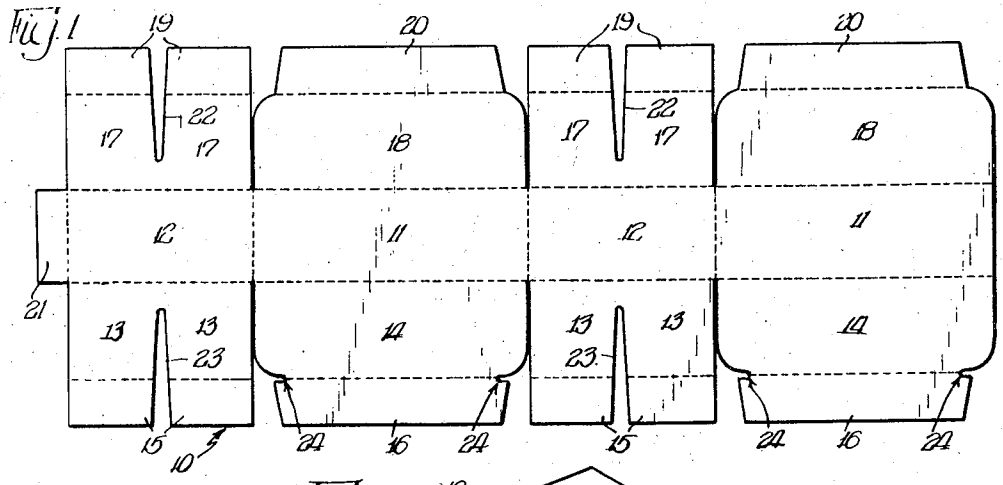

Fig. 2.

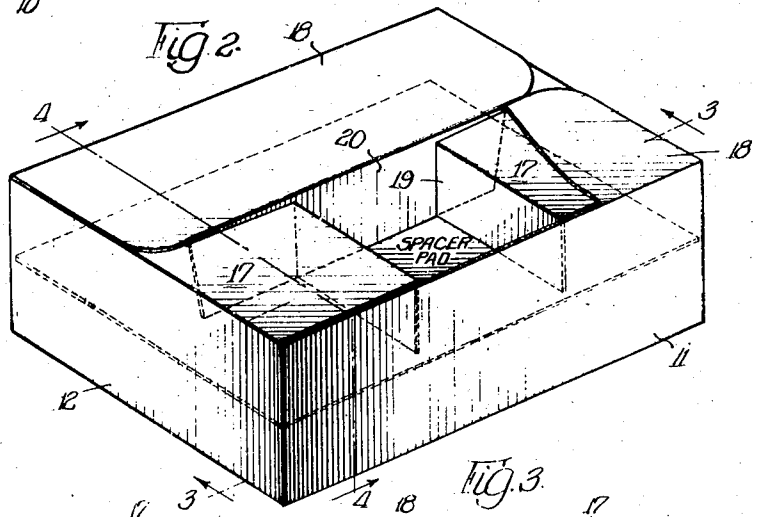

Fig. 3.

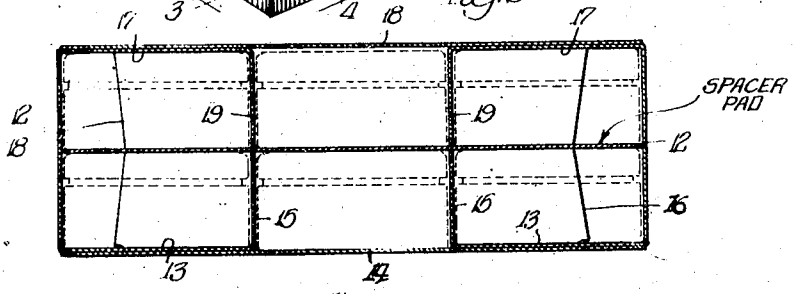

Fig. 4

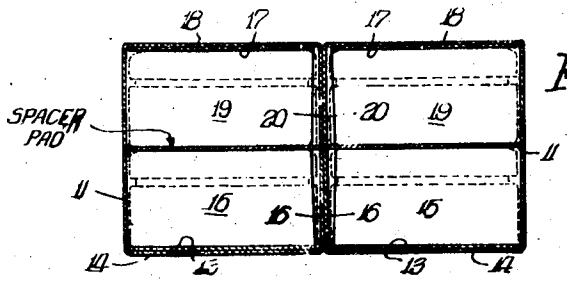

INVENTOR.
Walton B. Crane,
BY
Cromwell, Greist & Warden

Oct. 12, 1948. W. B. CRANE 2,450,941

SHIPPING, STORAGE AND DISPLAY CARTONS

Filed Aug. 25, 1943 3 Sheets-Sheet 2

Fig. 5.

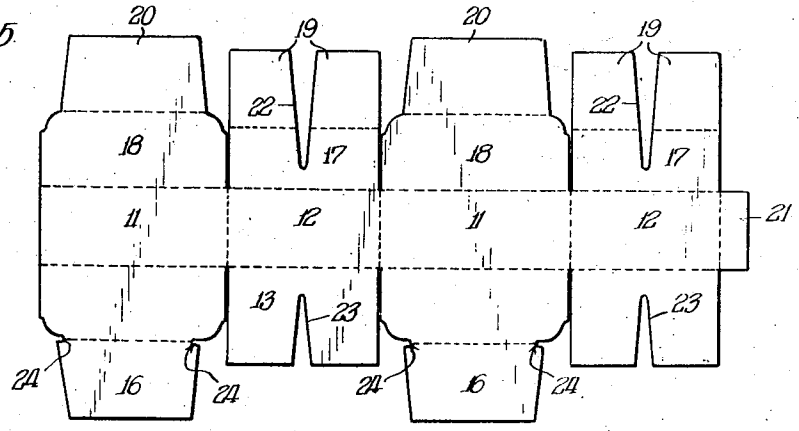

Fig. 7.

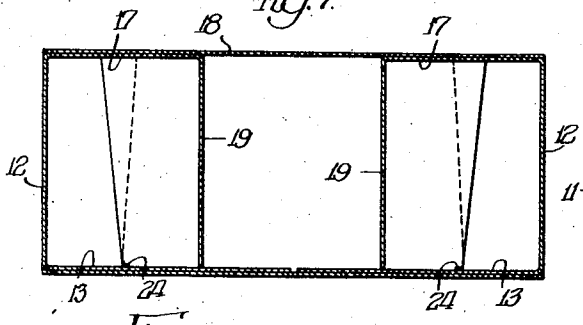

Fig. 8.

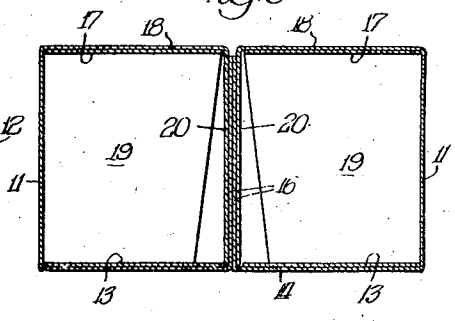

Fig. 6.

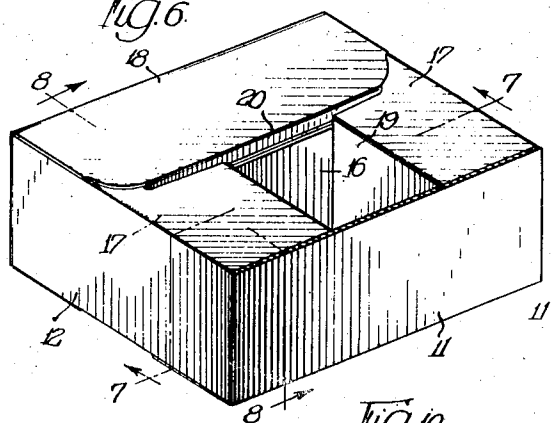

Fig. 9.

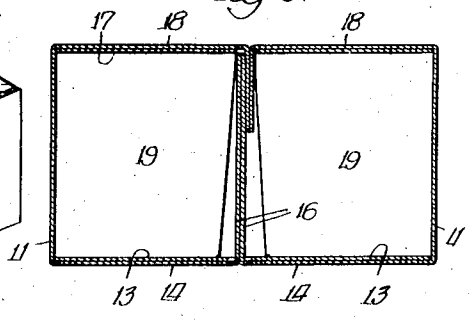

Fig. 10.

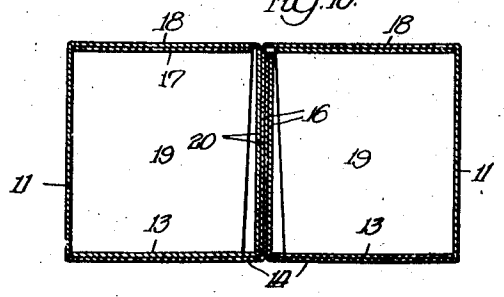

INVENTOR.
Walton B. Crane,
BY
Cromwell, Greist & Warden
attys

Oct. 12, 1948. W. B. CRANE 2,450,941

SHIPPING, STORAGE AND DISPLAY CARTONS

Filed Aug. 25, 1943 3 Sheets-Sheet 3

Fig. 11

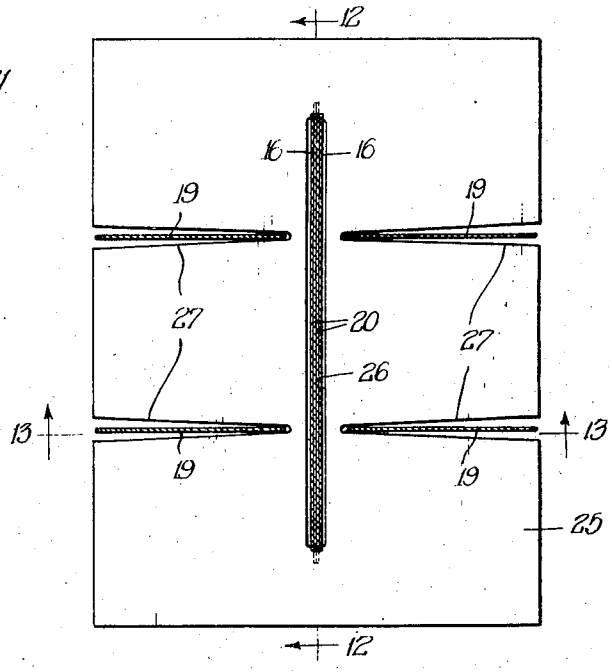

Fig. 12.

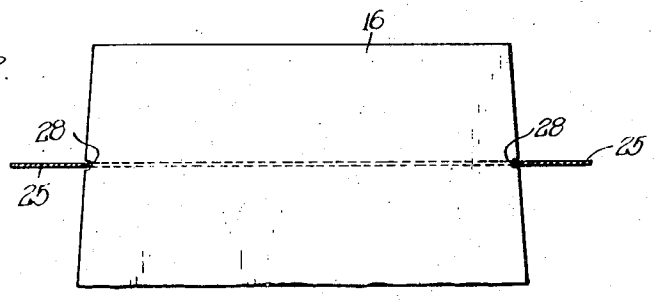

Fig. 13.

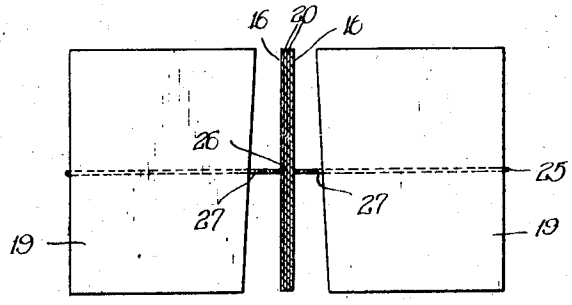

INVENTOR.
Walton B. Crane.
BY
Cromwell, Frust & Warden
Attys.

Patented Oct. 12, 1948 2,450,941

UNITED STATES PATENT OFFICE

2,450,941

SHIPPING, STORAGE, AND DISPLAY CARTONS

Walton B. Crane, Los Angeles, Calif., assignor to Alpak, Los Angeles, Calif., a copartnership

Application August 25, 1943, Serial No. 499,909

8 Claims. (Cl. 229—27)

1

This invention relates to the manufacture of containers or cartons. More particularly, it pertains to improvements in the manufacture of containers comprising combination shipping, storage and display devices cut, scored, and glued from single blanks, and thereafter folded from collapsible position and held in erect interlocked engagement by means of longitudinal bottom interlocking partitions.

Heretofore various types of cartons and containers have been utilized for packaging materials containing heavy breakable jars filled, for example, with cosmetics, pharmaceutical preparations, shaving creams, and the like. Such articles packed in a container are of considerable weight. They need ample protection against breakage as well as surface protection against scruffing, scratching, or other mutilating effects usually produced by having one in contact with another. It has been customary to pack such articles in ordinary cardboard boxes, lining the inner walls, top and bottom with corrugated paper in an effort to offset these disadvantages but this has been unsatisfactory. In addition to the inner disturbances created between the packaged articles themselves, there is an added disadvantage in the fact that such conventional cartons and containers of themselves are insufficiently reinforced internally against stresses and strains set up by the weight of the jars. A conventional carton packed as above described, if grasped at one corner during handling or shipping, seems to have a tendency to collapse or to become distorted because it is insufficiently braced and not interlockingly held together. If this is not observed and prevented in time by the handler of such containers or cartons, there is always great danger of breakage by the contents falling out of the container.

Generally, therefore, it is an object of the present invention to provide a type of carton or container which will overcome the foregoing difficulties and disadvantages, which is economical of manufacture, simple yet sturdy and durable of construction, and which is well suited to the purposes for which it is intended.

More specifically, it is an object of the present invention to provide a combined shipping, storage and display device from a blank of cut and scored board material which can be folded into container formation to provide end and side walls, inner and outer bottom and top walls, and upper and lower longitudinal partitions connected to the outer walls with cross partitions connected to the inner walls, and in which the

2

inner walls have slots interlockingly to engage longitudinal partitions along locking edges provided therefor.

A principal object of the invention is the provision of an interlocked carton or container which will remain a completed unit after the same has been shipped, stored and opened and which thereafter can be utilized as a display device.

Another object of the invention is the provision of a carton such as that herein described which can be divided into upper and lower tiers by utilizing a die-cut divider without interfering with the functions of the longitudinal and transverse partitions and which additionally functions as a supplemental reinforcing member.

Yet another object of the invention is the provision of a carton or container in which there is provided longitudinal and transverse partitions integral with the bottom and top walls thereof, interlocking with each other and extending from top to bottom of the upper and lower walls to hold those walls in reinforced and spaced apart relationship.

Other objects of the invention will in part be obvious and will in part appear hereinafter.

The invention accordingly comprises an article of manufacture possessing the features, properties, and the relation of elements which will be exemplified in the article hereinafter described and the scope of the application of which will be indicated in the claims.

For a fuller understanding of the nature and objects of the invention reference should be had to the following detailed description taken in connection with the accompanying drawings, in which:

Fig. 1 is a plan view of one form of a die cut and scored blank contemplated by the present invention;

Fig. 2 is an isometric view of the blank shown in Fig. 1 folded in interlocked and closed position with a portion of one outer cover broken away for clearness in illustration;

Fig. 3 is a transverse side elevational view taken along the lines 3—3 of Fig. 2, looking in the direction of the arrows;

Fig. 4 is a transverse end elevational view taken along the lines 4—4 of Fig. 2, looking in the direction of the arrows;

Fig. 5 is another form of a die cut and scored blank made in accordance with the principles of the present invention;

Fig. 6 is an isometric view of a folded and interlocked blank like that illustrated in Fig. 5 with a portion of the outer cover removed;

Fig. 7 is a transverse side elevational view taken along the lines 7—7 of Fig. 6, looking in the direction of the arrows;

Fig. 8 is a transverse end elevational view taken along the lines 8—8 of Fig. 6, also looking in the direction of the arrows;

Fig. 9 is a cross sectional elevational view of a modified form of inner construction illustrating different lengths of partitions;

Fig. 10 is another modified form of inner construction illustrating a different arrangement of adjacently aligned partitions;

Fig. 11 is a plan view of a die-cut dividing pad illustrating the relative position thereof with respect to transverse and longitudinal partitions shown in cross section;

Fig. 12 is an end elevational view taken along the line 12—12 of Fig. 11 and looking in the direction of the arrows; and

Fig. 13 is an end elevational view partly in section taken along the lines 13—13 of Fig. 11 and also looking in the direction of the arrows.

This is a continuation-in-part of my copending application Serial No. 431,024, now Patent No. 2,347,183.

Referring more specifically to Fig. 1 of the drawings, there is indicated generally at 10 a die cut and scored blank preferably cut from a single web of material. Suitable score lines divide the blank into complementary side walls 11, 11 and end walls 12, 12. To one side of these walls are inner bottom walls 13, 13 and outer bottom walls 14, 14. The inner bottom walls 13, 13 each have extensions forming bottom cross or transverse partitions 15, 15 and the outer bottom walls 14, 14 have longitudinal bottom extensions forming locking partitions 16, 16.

On the other side of the end and side walls 11, 11 and 12, 12 are inner top walls 17, 17 and outer top walls 18, 18. Extending from the inner top walls 17, 17 are top cross or transverse partitions 19, 19. Extending from the outer top walls 18, 18 are longitudinal top partitions 20, 20.

One end wall 12 has an extension providing a glue flat 21. The inner bottom walls 13, 13 are provided with slots 23, 23. The inner top walls 17, 17 are provided with slots 22, 22. These slots also divide the bottom and top cross partitions 15, 15 and 19, 19 into two parts. The bottom of these slots end short of the adjacent end walls 12, 12.

At the intersection or fold line of the outer bottom walls 14, 14 and the longitudinal bottom locking partitions 16, 16 there are provided, inwardly directed from their respective edges, cut-out portions or notches 24, 24.

Such a blank with glue applied to one face of the glue flat 21 is folded centrally over upon itself and the glue flap made to adhere preferably to an inner surface of a side wall 11. In this collapsed or knocked down condition the articles may readily and conveniently be shipped in bulk ready for erecting in interlocked position for use.

In folding such an article into interlocked position the same is first squared and opposite inner bottom walls 13, 13 are folded inwardly toward each other so that the bottom cross partitions 15, 15 fall within the confines of the carton. Thereafter the outer bottom walls 14, 14 are folded over the inner bottom walls 13, 13 so that the longitudinal bottom locking partitions 16, 16 fall adjacent each other within the slots 23, 23 provided in the inner bottom partitions 13, 13. When the bottom sections are all in aligned and flush position the notches 24, 24 will fall into the

bottoms of the slots 23, 23, thereby holding in erect and interlocked position the carton and partitions ready for filling.

It will be observed by reference to the drawings that the longitudinal partitions are somewhat tapered. They are narrower across their free ends than at their base ends. The distance across the free ends is substantially the same as the distance between the bottoms of the slots 23 in the panels forming the inner bottom walls 13, 13. When these free ends are inserted and the outer bottom walls pushed downwardly to bring all bottom walls into aligned position the inner walls are flexed inwardly because the tapering edges frictionally engage the bottoms of the slots and this inward flexing continues until the bottoms of the slots fall into registry with the notches 24 and the inwardly flexed walls spring back into normal position as indicated in the assembled views so that they are aligned adjacent to the outer walls.

The longitudinal bottom partitions 16, 16 and bottom cross partitions 15, 15 form cells in the bottom of the carton well adapted to receive articles in the form of jars such as, for example, containing shaving cream, cold cream, or the like, and it will be seen that all sides of each individual jar are isolated and protected from each adjacent jar. After the bottom cells have been filled, a spacer pad may be placed upon the bottom layer, thereby dividing the carton into upper and lower tiers and at the same time lending protection to the upper sections or covers of the jars. A similar tier of jars can then be placed upon the spacer pad whereup the inner top walls 17, 17 are folded thereover in such a manner that the top cross partitions 19, 19 point downwardly and between adjacent jars separating the same transversely. Thereafter the outer top walls 18, 18 are folded over the inner top walls 17, 17 in such a manner that the longitudinal top partitions 20, 20 come together and adjacent each other to penetrate the slots 22, 22 in the inner top partitions, the bottoms of all partitions coming to rest against the spacer pad.

It will be noted that the top longitudinal and cross partitions similarly form individual cells for the top tier of jars, protecting them in the same manner as the lower tiers are protected, that is, on top and bottom as well as peripherally. The top longitudinal partitions 20, 20 extending from the top covers 18, 18 sufficiently frictionally engage each other to be held in this position although a strip of tape can be used as an auxiliary closure element to insure that they are held thus during shipping.

Referring now to Fig. 5 it will be seen that there has been provided a cut and scored blank in accordance with the principles of the present invention as disclosed in the modification illustrated in the preceding figures. There is illustrated in this modification a blank which is of somewhat different dimensions with respect to certain of the partitions and walls but in all other respects it is identical to the other modification with the exception that there are no bottom cross partitions connected to the inner bottom walls.

This blank may similarly be folded upon itself around a central score line and the glue flap 21 similarly affixed to an opposite side wall.

As will be seen from Figs. 6 to 8, inclusive, the collapsed folded and glued together blank is erected by squaring the end and side walls and similarly infolding the inner bottom walls, infolding the outer bottom walls with the longitudinal bottom locking partitions coming adjacently to-

gether so that the notches 24, 24 interlockingly engage the bottoms of the slots 23, 23. The carton is thus in condition for filling and after this has been done the inner top and outer top walls are folded respectively in that order similarly as set forth in the preceding modification. Thus, there is formed a container, the top longitudinal and cross partitions of which, because of their predominant length, extend to the inner bottom container wall and the bottom longitudinal partition lies adjacent the top longitudinal partitions extending to the inner top wall as more particularly illustrated in Figs. 7 and 8. This arrangement provides a plurality of adjacently aligned longitudinal partitions and spaced apart transverse partitions which hold the bottom and top walls in reinforced and spaced apart relationship.

It is not essential in all cases, depending of course upon the weight of the particular articles being dealt with, that the complete set of longitudinal partitions extend from top to bottom walls. However, it is desirable and essential to the practical success in many respects of such cartons as those herein described for holding heavy articles, that at least one set of the partitions extend from top to bottom so that proper reinforced internal structure is provided to compensate for various stresses and strains set up as well as to provide the tailored fit which is imparted to such folded blanks of material. One form of such partition arrangement is illustrated in Fig. 9.

It is also within the contemplation of the invention that, regardless of length, the various adjacent upper and lower longitudinal partitions, when such are used, may alternately be staggered adjacently in aligned position more clearly as illustrated in Fig. 10.

While the carton illustrated in Figs. 5 to 10, inclusive, depicts a type of container which is more suitable for longer rather than the more flat type of articles to be packed, it does not show a spacing pad so that the container can be divided into upper and lower tiers. However, reference to Figs. 11 and 12 will illustrate an arrangement whereby cartons having partitions extending from top to bottom can be sub-divided into upper and lower tiers.

The dividing pad in this case is indicated generally at 25. Preferably this pad is die-cut to provide an opening 26 centrally of the pad and adjacently disposed openings 27 perpendicularly thereto. The opening 26 is adapted to receive both upper and lower longitudinal partitions and the openings 27 to receive transverse partitions as illustrated. As an aid in strengthening and lending rigidity to the carton, the longitudinal partitions may be provided with cut-out notches 28, 28 adapted interlockingly to engage the extreme ends of the slot 26.

It will thus be seen that the objects hereinbefore set forth may readily and efficiently be attained, and since certain changes may be made in the above article and different embodiments of the invention could be made without departing from the scope thereof, it is intended that all matter contained in the above description or shown in the accompanying drawings shall be interpreted as illustrative and not in a limiting sense.

It is also to be understood that the following claims are intended to cover all of the generic and specific features of the invention herein described, and all statements of the scope of the invention which, as a matter of language, might be said to fall therebetween.

Having described my invention, what I claim as new and desire to secure by Letters Patent, is:

1. An article of the character described, which comprises a shipping, storage and display device comprising a single blank of cut and scored board material and which, when folded and secured into container formation, constitutes continuous end and side walls having inner and outer bottom and top walls integral therewith, longitudinal partitions connected to outer walls and cross partitions connected to inner walls, said cross partitions and said inner walls having slots to receive said longitudinal partitions, the distance between the bottoms of the slots being less than the length of the walls which are parallel to said longitudinal partitions, and the bottom ends of said longitudinal partitions having adjacent locking notches interlockingly engaging the bottoms of said inner wall slots, and the length of the lower longitudinal partitions adjacent said locking notches within said container being greater than the distance between the bottoms of said slots.

2. An article of the character described, which comprises a shipping, storage and display device consisting of a single blank of cut and scored board material and which, when folded and secured into container formation, constitutes end and side walls having inner and outer bottom and top walls, longitudinal partitions connected to outer walls and cross partitions connected to inner walls, said cross partitions and said inner walls having slots to receive said longitudinal partitions, the distance between the bottoms of the slots being less than the lengths of the walls which are parallel to said longitudinal partitions, said longitudinal partitions having adjacent locking notches at their bottoms interlockingly engaging the bottoms of said inner wall slots, said longitudinal partitions being tapered so that the lengths of the free edges are less than the distance between the bottoms of said slots and the lengths of secured edges lying within said container and adjacent said locking notches being greater than the distance between the bottoms of said slots.

3. An article of the character described, which comprises a shipping, storage and display device consisting of a single blank of cut and scored board material and which, when folded and secured into container formation, constitutes end and side walls having inner and outer bottom and top walls, upper and lower longitudinal partitions connected to outer walls and upper and lower cross partitions connected to inner walls, said cross partitions and said inner walls having slots to receive said longitudinal partitions, the distance between the bottoms of the slots being less than the length of the walls which are parallel to said longitudinal partitions, and said lower longitudinal partitions having edge-locking notches at the connecting intersections of said lower outer bottom wall, and said lower longitudinal partitions interlockingly engaging the bottoms of said inner wall slots at said notches, the distance across said lower longitudinal partitions within said container being greater than the distance between the bottoms of the slots.

4. An article of the character described, which comprises a shipping, storage and display device consisting of a blank of cut and scored board material and which, when folded and secured into container formation, constitutes end and side

walls having inner and outer bottom and top walls, upper and lower longitudinal partitions connected to outer walls and upper and lower cross partitions connected to inner walls, in combinations with a dividing pad separating said container into upper and lower tiers, which pad receives and equalizes on opposite sides thereof opposed thrusts of said upper and lower longitudinal and cross partitions, said cross partitions and said inner walls having slots to receive said longitudinal partitions, the distance between the bottoms of said slots being less than the lengths of the side walls, and the ends of said lower longitudinal partitions having adjacent cut-out portions at their bottoms interlockingly engaging the bottoms of said inner wall slots and the distance along said lower longitudinal partitions within said container adjacent said cut-out portions being greater than the distance between the bottoms of the slots.

5. An article of the character described, which comprises a shipping, storage and display device consisting of a blank of cut and scored board material and which, when folded and secured into container formation, constitutes end and side walls having inner and outer bottom and top walls, a plurality of upper and lower longitudinal partitions lying adjacent each other and at least two of which support the upper and lower inner and outer walls in spaced apart relationship, said inner walls and cross partitions having slots to receive said longitudinal partitions, the distance between the bottoms of the slots being less than the length of the walls which are parallel to said longitudinal partitions, and said lower longitudinal partitions having locking notches interlockingly engaging the bottoms of said inner wall slots, the lengths of the lower longitudinal partitions adjacent said notches being greater than the distance between the bottoms of said slots.

6. An article of the character described, which comprises a shipping, storage and display device consisting of a blank of cut and scored board material and which, when folded and secured into container formation, constitutes end and side walls having inner and outer bottom and top walls, a double upwardly extending longitudinal partition connected to the outer bottom wall and supporting the upper and lower inner and outer walls in spaced apart relationship, a plurality of downwardly extending cross partitions lying separated from each other and similarly supporting the upper and lower inner and outer walls in spaced apart relationship and in conjunction with said longitudinal partitions, said cross partitions and said inner walls having slots to receive said longitudinal partitions, the distance between the bottoms of the slots being less than the length of the walls which are parallel to said longitudinal partitions, and the edges of said longitudinal partitions at their bases having cut-out portions interlockingly engaging the bottoms of said inner wall slots, the lengths of the longitudinal partitions adjacent said cut-out portions being greater than the distance between the bottoms of said slots.

7. An article of the character described, which comprises a shipping, storage and display device

consisting of a blank of cut and scored board material and which, when folded into container formation, constitutes end and side walls, inner and outer bottom and top walls, upper and lower longitudinal partitions connected to outer walls and cross partitions connected to inner walls, said inner walls having slots to receive said longitudinal partitions, and said lower longitudinal partitions having locking edges interlockingly engaging the bottoms of said inner wall slots, in combination with a dividing pad separating said container into upper and lower tiers, said pad having openings therein interlockingly receiving longitudinal partitions and also receiving said cross partitions which pass through said opening to form cells and to permit said partitions to hold said upper and lower innner and outer walls in spaced apart relationship, said longitudinal partitions having opposite notches along their edges about midway between their base and free ends, the opening in the pad receiving the longitudinal partitions constituting a slot, the length of said slot being less than the length of the walls which lie parallel to said longitudinal partitions, the ends of the slot being engaged by said notches, said partitions below said slot being of greater length than the length of said slot, and said partitions above said slot being of lesser transverse length than the length of said slot.

8. In a shipping, storage and display container comprising a single blank of cut, scored and folded board material secured to provide container walls, the improvement comprising an inner and outer bottom wall, outer said bottom wall having extensions providing an upwardly extending longitudinal partition, and said inner bottom wall providing extensions forming upwardly extending transverse partitions, said transverse partitions and said inner wall having slots receiving said longitudinal partition, the distance between bottoms of the slots being less than the length of the walls which are parallel to said longitudinal partition, and said longitudinal partition having adjacent locking notches along opposite edges each interlockingly engaging a bottom of an inner wall slot, said longitudinal partition being wider at its base above said locking notches than the distance between the bottoms of said slots and narrower at its free top edge than the distance between said slots.

WALTON B. CRANE.

REFERENCES CITED

The following references are of record in the file of this patent:

UNITED STATES PATENTS

Number	Name	Date
577,371	Ferguson	Mar. 31, 1896
1,965,215	Boeye	July 3, 1934
2,023,578	Daley	Dec. 10, 1935
2,077,173	Holy	Apr. 13, 1937
2,098,639	Walther	Nov. 9, 1937
2,110,480	Barlow	Mar. 8, 1938
2,142,793	Lipkin	Jan. 3, 1939
2,284,815	Grimm	June 2, 1942
2,347,183	Crane	Apr. 25, 1944
2,360,931	Brockman	Oct. 24, 1944

Certificate of Correction

Patent No. 2,450,941. October 12, 1948.

WALTON B. CRANE

It is hereby certified that errors appear in the printed specification of the above numbered patent requiring correction as follows:

Column 3, lines 45 and 58, for the word "flat" read *flap*; column 4, line 34, for "whereup" read *whereupon*; column 7, lines 4 and 5, for "combinations" read *combination*; column 8, line 17, for "innner" read *inner*; line 59, under references cited, for "577,371" read *557,371*;

and that the said Letters Patent should be read with these corrections therein that the same may conform to the record of the case in the Patent Office.

Signed and sealed this 1st day of March, A. D. 1949.

[SEAL]

THOMAS F. MURPHY,
Assistant Commissioner of Patents.