July 6, 1965 J. R. GUSEMAN ETAL 3,193,377

METHOD AND APPARATUS FOR CONTROLLING THE TEMPERATURE OF BRIQUETTING ROLLS

Filed April 12, 1962

FIG. 1

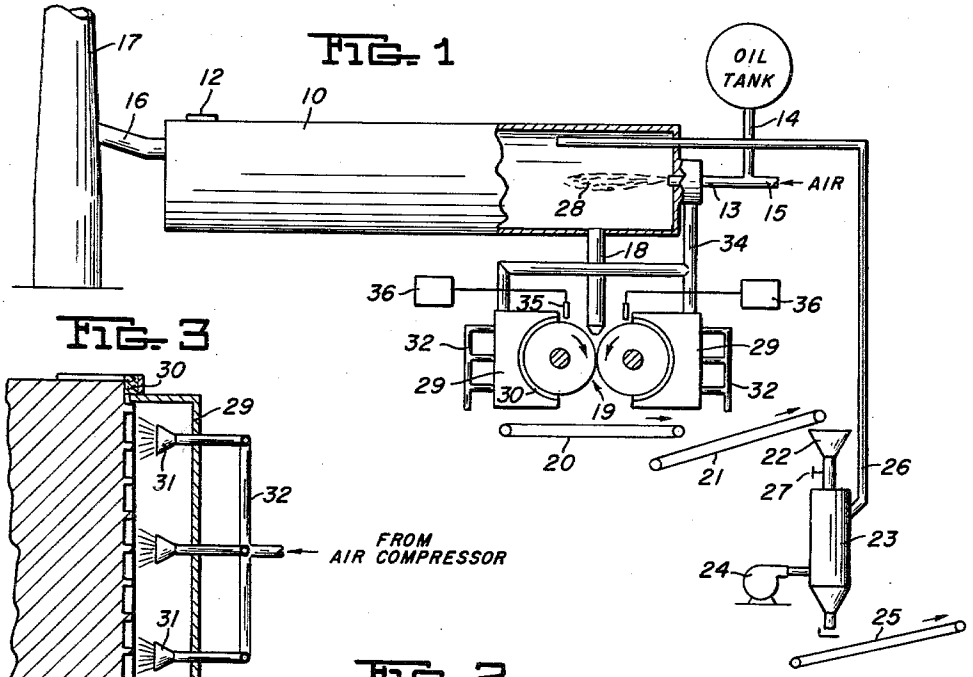

FIG. 3

FIG. 2

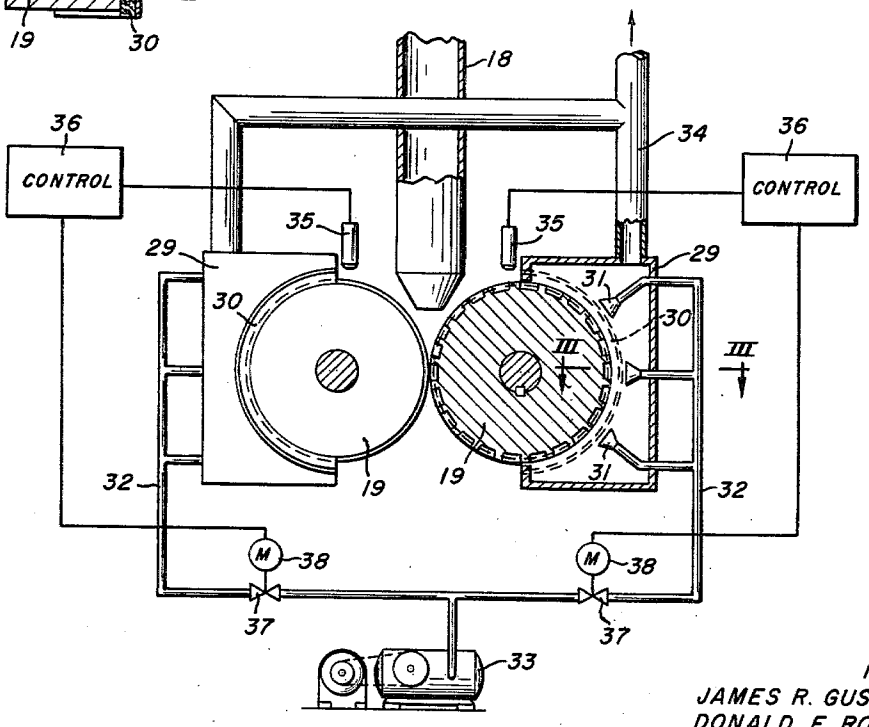

INVENTOR
JAMES R. GUSEMAN and
DONALD E. ROHAUS
By Donald G. Dalton
Attorney

United States Patent Office

3,193,377

Patented July 6, 1965

3,193,377

METHOD AND APPARATUS FOR CONTROLLING THE TEMPERATURE OF BRIQUETTING ROLLS

James R. Guseman, Irwin, and Donald E. Rohaus, Monroeville, Pa., assignors to United States Steel Corporation, a corporation of New Jersey

Filed Apr. 12, 1962, Ser. No. 186,902
8 Claims. (Cl. 75—3)

This invention relates to a method and apparatus for controlling the temperature of rolls used in briquetting hot materials.

Although our invention has broader application, its principles apply particularly to cooling the rolls of a press used for briquetting hot iron ore fines. A typical process for briquetting these fines involves heating them to a temperature of about 1300 to 2100° F. in a rotary kiln or traveling grate, and pressing them into briquettes while they still approach this temperature. The resulting briquettes are hard and dense and furnish excellent material for charging to a blast furnace or for open hearth charge ore. The roll-type press commonly used in the process includes a pair of cylindrical roll bodies which have mating pillow-shaped pockets in their circumferential surfaces. The pressures required are in the range of about 20,000 to 120,000 pounds per inch of effective roll width. The heat, pressure, and abrasive action of the material cause the roll surfaces to wear rapidly. Hence the rolls are short-lived, even though their wearing surfaces usually are of hard alloy steels.

An object of our invention is to provide a method and apparatus for controlling the temperature of rolls used in briquetting hot materials by applying a gaseous cooling medium to the rolls, and subsequently utilizing the heated medium to supply heat to the chamber where the materials are heated preliminary to briquetting.

A further object is to provide a method and apparatus for cooling the rolls of a briquetting press by applying air thereto in quantities controlled to maintain the roll temperature within a predetermined range, and subsequently utilizing this air as preheated combustion air in the chamber where the materials are heated.

A more specific object is to provide a roll-cooling apparatus which includes a hood shaped to cover approximately half the circumferential surface of a roll without interfering with the function of the roll, means for injecting streams of cooling air into the hood against the roll surface, and control means for regulating the air volume to maintain the temperature of the roll surface within a predetermined range.

In the drawing:

FIGURE 1 is a diagrammatic view of a hot-briquetting installation equipped with our temperature control apparatus;

FIGURE 2 is a partly diagrammatic end elevational view on a larger scale and with parts broken away showing rolls equipped with our temperature control apparatus; and

FIGURE 3 is a horizontal section on line III—III of FIGURE 2.

FIGURE 1 shows a heating chamber **10**, illustrated as a conventional rotary kiln. We continuousuly introduce fines (for example minus ½ inch, minus ⅜ inch, or minus ¼ inch iron ore) to the left end of chamber **10** through a conventional feeding device **12**. The right end of the chamber is equipped with a burner **13** to which we introduce fuel and primary combustion air via pipes **14** and **15** respectively. In this manner we heat the fines to a suitable briquetting temperature, which in the example of iron ore is about 1500 to 1800° F. We hold the fines at this temperature long enough to drive off all free and combined moisture, which may require about 15 minutes. Waste gases discharge from the left end of the chamber through a conventional flue **16** and stack **17**. Hot fines discharge continuously from the right end of the chamber through an insulated chute **18** to a conventional roll-type briquetting press **19**, which forms them into briquettes while still hot, as already explained. A series of conveyors **20** and **21** receive the briquettes and accompanying fines and continuously carry them to the entry port **22** at the top of a cooling shaft **23**.

In the installation illustrated, we blow air through the briquettes and fines in shaft **23** from a blower **24** connected to the lower portion of the shaft, and thus cool the briquettes to a suitable handling temperature. The cooled briquettes discharge continuously from the bottom of the shaft to suitable handling equipment, such as a conveyor **25**. The air also has sufficient velocity to pick up most of the unbriquetted fines below a predetermined particle size. Contact with the hot briquettes of course heats the air, and it reaches a temperature about 100 to 300° F. below the temperature at which briquettes enter the shaft. Heated air and entrained fines discharge continuously from the upper portion of the shaft through a pipe **26**. The shaft is equipped with a suitable valve **27**, such as a star feeder, to prevent escape of air through its entry port **22**. Pipe **26** discharges the air and entrained fines into the heating chamber **10** beyond the flame **28** issuing from burner **13**. Thus we utilize the heated air as secondary combustion air, while we recycle the fines only through the final portion of the heating chamber and subsequent apparatus. Air from the cooling shaft is not suitable as primary combustion air in burners presently available for the reason that the large content of entrained fines would clog the burners. The foregoing method and apparatus for handling the unbriquetted fines and returning them to the heating chamber, along with preheated secondary combustion air, form the subject of a separate application filed by the co-inventor Rohaus, Serial No. 122,894, filed July 10, 1961 (now Patent No. 3,116,996), and hence are not claimed in the present application.

In accordance with the present invention, we mount stationary hoods **29** over the outer portions of the rolls of the briquetting press **19**. As best shown in FIGURES 2 and 3, we form each hood of a sheet metal shell which has an open side facing the briquetting roll and approximately semicircular cutouts in its end walls to accommodate the roll. We fix sealing strips **30** of asbestos or equivalent around the edges of the cutouts and contacting the roll surface. We inject streams of compressed air into each hood **29** via a plurality of fan-shaped nozzles **31** directed against the surface of the roll and connected via a pipe **32** to an air compressor **33**. A pipe **34** carries air from the hood back to burner **13** to supplement the air introduced to the burner via pipe **15** (FIGURE 1). Contact with the hot fines of course heats the rolls, but the air streams from the nozzles impinge on the roll surfaces to maintain the rolls at a lower temperature. At the same time the air is heated, and is used advantageously as preheated combustion air in the heating chamber **10**. Since the air does not pick up any appreciable volume of fines in the hoods, we can use it as primary combustion air in the burners, as illustrated. Nevertheless it is apparent we could use this air as secondary combustion air the same as air from the cooling shaft **23**.

We maintain the surface temperature of the rolls within a predetermined range in the region which is about to contact the hot fines. Preferably we equip the apparatus with automatic control means for this purpose. The control means illustrated includes a temperature-sensing

element 35, a controller 36, an adjustable valve 37 in pipe 32, and a motor 38 for positioning valve 37, duplicated for each hood and roll. We position the temperature sensing element 35 adjacent the surface of the roll where it emerges from hood 29 and connect this element with the controller 36 and connect the controller in turn with motor 38. When the roll temperature tends to change, the controller automatically energizes the motor to adjust valve 37. Adjustment of the valve increases or diminishes the air volume as needed to maintain the roll temperature within the desired range. We have not illustrated the individual parts of our control means in detail for the reason that suitable devices are well known per se and available commercially. One supplier of such devices is Minneapolis-Honeywell Regulator Company. For the temperature sensing element we can use their Brown "Radiomatic" unit described in their Catalog C15–1*a*. For the controller we can use their "Electronik" Proportional Controller Series 156 R in conjunction with their "Electro-O-Line" Control Unit Series 801C3 described in their Catalog C15–2*a*. For the motor we can use their "Modutrol" valve and damper motor described in their Catalog C101–1*a*. Each of the foregoing catalogs is a printed publication, copyright 1960. Nevertheless it is apparent we can use equivalent devices from other suppliers.

Preferably the region of the roll surface about to contact the hot fines has a temperature within the range 500 to 550° F., which we can vary by adjusting the controller 36. If the roll is not cooled, its surface temperature remains about 700° F. It is critical that we use a gas, such as air, as the cooling medium rather than a liquid. If we used a liquid medium, unevaporated liquid remaining in the pockets of the briquetting rolls would explode on contact with hot ore. Furthermore alloy steels of which the roll surfaces usually are formed cannot withstand the thermal shocks incident to liquid cooling.

As a specific example to demonstrate how our invention operates, we heated a minus ¼ inch hematite ore to about 1800° F. and fed the ore at this temperature to a briquetting press having rolls 20½ inches in diameter. Each roll was constructed with a Type 440A stainless steel sleeve having a single row of fifty 1½ by 1¼ by ¼ inch pillow-shaped pockets; the pockets were separated by ⅜ inch lands. We spring-loaded the rolls in the usual manner to provide a pressure at the roll bite of about 120,000 pounds per linear inch of roll width. With the apparatus illustrated, we blew air on the face of one roll opposite the bite to maintain a surface temperature of 550° F. in the region about to contact the hot fines, leaving the other roll uncooled. The life of the cooled roll was about 50 percent greater than that of the uncooled roll. The heat recovered from the roll and used as primary combustion air constituted a heating value of about 88 B.t.u. per pound of air, which reduced the fuel requirement of the burner about 4 percent.

While we have shown and described only a single embodiment of the invention, it is apparent that modifications may arise. Therefore, we do not wish to be limited to the disclosure set forth but only by the scope of the appended claims.

We claim:

1. In a briquetting process in which fines are heated to an elevated temperature in a heating chamber and the heated fines are formed into briquettes in a roll-type press, the combination therewith of a method of controlling the temperature of the briquetting rolls comprising impinging air streams against the roll surfaces opposite the region where the rolls contact the hot fines, thus cooling the roll surfaces and heating the air, and utilizing the heated air in the heating chamber as preheated combustion air.

2. In a briquetting process in which fines feed to a heating chamber and pass continuously therethrough, fuel burns with combustion air in said chamber to heat the fines to an elevated temperature, and the heated fines are formed into briquettes in a roll-type press, the combination therewith of a method of controlling the temperature of the briquetting rolls comprising impinging air streams against the roll surfaces opposite the region where the rolls contact the hot fines, regulating the volume of air in said streams to maintain the region of the roll surfaces about to contact the hot fines at a temperature within a predetermined range, heating the air of said streams while cooling the rolls therewith, and conducting the heated air to the chamber for use as preheated combustion air.

3. In a briquetting proces in which iron ore fines feed to a heating chamber and pass continuously therethrough, fuel burns with combustion air in said chamber to heat the fines to a temperature of about 1300 to 2100° F., and the heated fines are formed into briquettes in a roll-type press, the combination therewith of a method of controlling the temperature of the briquetting rolls comprising impinging air streams against the roll surfaces opposite the region where the rolls contact the hot fines, regulating the air volume to maintain the region of the roll surfaces about to contact the hot fines at a temperature within a range of 500 to 550° F., heating the air of said streams while cooling the rolls therewith, and conducting the heated air to the chamber for use as preheated combustion air.

4. In a briquetting installation which includes a heating chamber, means for feeding fines to said chamber, a burner in said chamber for burning fuel with combustion air, a roll-type briquetting press, and means for continuously transferring heated fines from said chamber to said press, the combination therewith of an apparatus for controlling the temperature of the rolls of said press, said apparatus comprising means for impinging air streams against the roll surfaces opposite the region where the rolls contact the hot fines, and means for conducting the air from said streams to said chamber to be used as preheated combustion air.

5. In a briquetting installation which includes a heating chamber, means for feeding fines to said chamber, a burner in said chamber for burning fuel with combustion air, a roll-type briquetting press, and means for continuously transferring heated fines from said chamber to said press, the combination therewith of an apparatus for controlling the temperature of the rolls of said press, said apparatus comprising means for impinging air streams against the roll surfaces opposite the region where the rolls contact the hot fines, means for regulating the volume of air in said streams to maintain the region of the roll surfaces about to contact the hot fines at a temperature within a predetermined range, and means for conducting the air from said streams to said chamber to be used as preheated combustion air.

6. In a briquetting installation which includes a heating chamber, means for feeding fines to said chamber, a burner in said chamber for burning fuel with combustion air, a roll-type briquetting press, and means for continuously transferring heated fines from said chamber to said press, the combination therewith of an apparatus for controlling the temperature of the rolls of said press, said apparatus comprising hoods covering the portions of the roll surfaces opposite the region where the rolls contact the hot fines, means for injecting air streams against the roll surfaces within said hoods, and pipe means connecting said hoods and said chamber for conducting the air from said hoods to said chamber to be used as preheated combustion air.

7. In a briquetting installation which includes a heating chamber, means for feeding fines to said chamber, a burner in said chamber for burning fuel with combustion air, a roll-type briquetting press, and means for continuously transferring heated fines from said chamber to said press, the combination therewith of an apparatus for con-

trolling the temperature of the rolls of said press, said apparatus comprising hoods covering the portions of the roll surfaces opposite the region where the rolls contact the hot fines, said hoods having open faces directed toward the rolls, means for injecting air streams against the roll surfaces within said hoods, means for regulating the volume of air in said streams to maintain the region of the roll surfaces about to contact the hot fines at a temperature within a predetermined range, and pipe means connecting said hoods and said chamber for conducting the air from said hoods to said chamber to be used as preheated combustion air.

8. In a briquetting installation which includes a heating chamber, means for feeding fines to said chamber, a burner in said chamber for burning fuel with combustion air, a roll-type briquetting press, and means for continuously transferring heated fines from said chamber to said press, the combination therewith of an apparatus for controlling the temperature of the rolls of said press, said apparatus comprising hoods covering the portions of the roll surfaces opposite the region where the rolls contact the hot fines, said hoods having open faces directed toward the rolls, nozzles mounted in said hoods and directed at the roll surfaces, pipe means connected

to said nozzles for introducing compressed air thereto and thereby injecting air streams against the roll surfaces within said hoods, valves in said pipe means, means adjacent the rolls where their surfaces emerge from said hoods for sensing the temperature of the rolls, a controller operatively connected to said last named means and said valves for adjusting the valves and thereby regulating the volume of air in said streams to maintain the region of the roll surfaces about to contact the hot fines at a temperature within a predetermined range, and pipe means connecting said hoods and said chamber for conducting the air from said hoods to said chamber to be used as preheated combustion air.

References Cited by the Examiner

UNITED STATES PATENTS

1,994,721	3/35	Lorig et al.	80—41
1,996,500	4/35	Adams	80—41
2,833,642	5/58	Barker et al.	75—3
2,958,596	11/60	Purvance	75—3

BENJAMIN HENKIN, *Primary Examiner.*

DAVID L. RECK, *Examiner.*