Mar. 27, 1923. 1,449,395

J. F. GOETZ

MUFFLER CONTROLLING DEVICE

Filed Mar. 21, 1921

Fig. 1

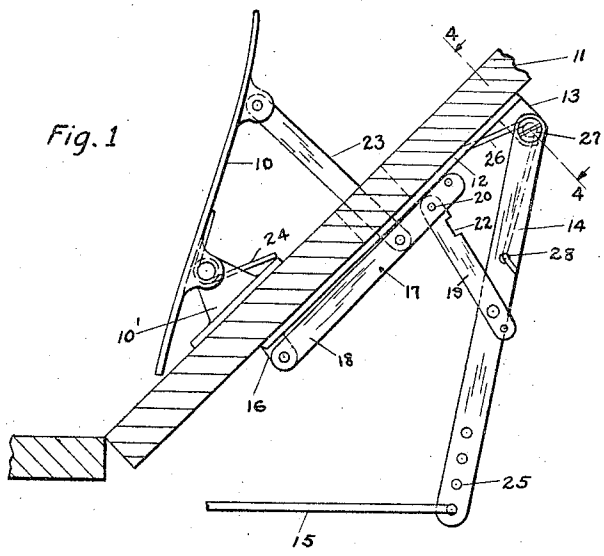

Fig. 3

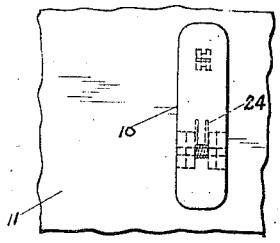

Fig. 4

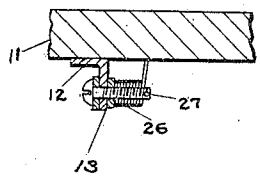

Fig. 2

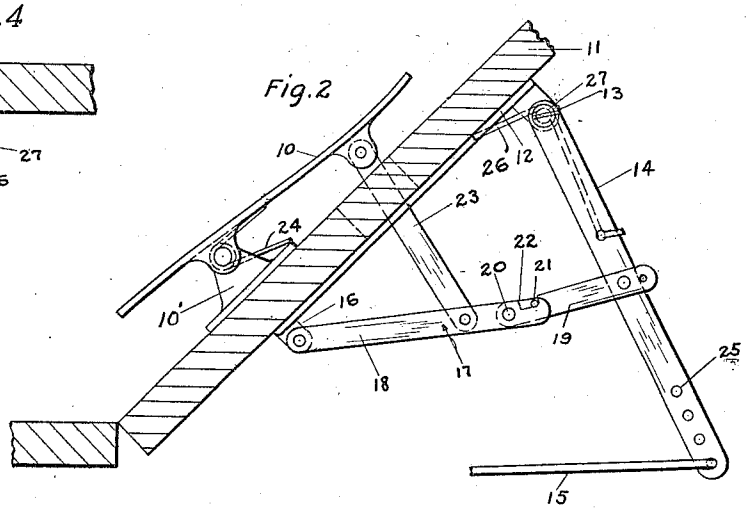

Fig. 5

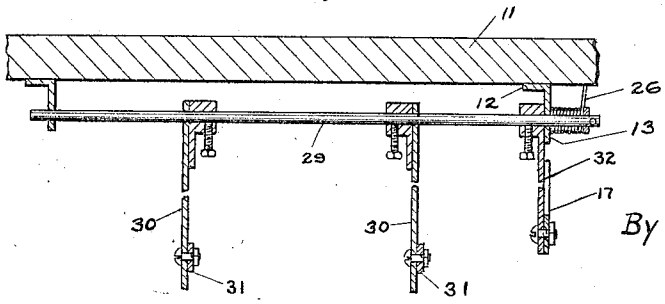

Inventor:
Julius F. Goetz
By Morsell & Kenney
Attorneys

Patented Mar. 27, 1923. 1,449,395

UNITED STATES PATENT OFFICE.

JULIUS F. GOETZ, OF HARTFORD, WISCONSIN.

MUFFLER-CONTROLLING DEVICE.

Application filed March 21, 1921. Serial No. 454,044.

To all whom it may concern:

Be it known that I, JULIUS F. GOETZ, a citizen of the United States, and resident of Hartford, in the county of Washington and State of Wisconsin, have invented new and useful Improvements in Muffler-Controlling Devices, of which the following is a description, reference being had to the accompanying drawings, which are a part of this specification.

My invention relates to a device for controlling the operation of the valve member of a muffler and the primary object is to provide a device of simple and improved construction which may be conveniently operated by a foot-pedal mounted on the foot-board of an automobile and which is so constructed that it will automatically lock when the valve is in either closed or opened position.

A further object of my invention is to provide a toggle mechanism for opening and closing the valve member which is preferably operated by a foot-pedal and which is adapted to be positioned either side of neutral, a spring preferably being employed in connection with the toggle mechanism adapted to hold said toggle mechanism in either of its said positions.

The invention consists in the novel constructions, arrangements and devices for carrying out the above stated objects and such other objects as will appear from the following description of certain preferred embodiments illustrated in the accompanying drawings, wherein—

Fig. 1 is a side elevation of a device embodying the principles of my invention and attached to the foot-board of an automobile, the parts being shown in the position they assume when the muffler valve is closed;

Fig. 2 is a similar view showing the parts in the position they assume when the muffler valve is opened;

Fig. 3 is a plan view of a fragmentary portion of the foot-board with the foot-pedal mounted thereon;

Fig. 4 is a detail sectional view taken on the line 4—4 of Fig. 1; and

Fig. 5 is a view of a modification showing an arrangement controlling the operation of the valves of a plurality of mufflers.

Like characters of reference designate like parts in the several views.

Referring to Figs. 1 to 4, I have illustrated my invention as embodied in a device attached to the foot-board of an automobile and operated by a foot-pedal 10 pivotally mounted on the foot-board 11. A member 12 is mounted on the underside of the foot-board, which is provided with a lug 13 to which one end of a lever 14 is pivotally connected. The lever 14 is operatively connected with the valve of the muffler (not shown) by means of a link 15. The member 12 is also provided with a lug 16 to which one end of a toggle link, designated as a whole by the reference character 17, is pivoted, the other end of said toggle link being pivoted to the lever 14. The toggle link comprises a member 18 and a member 19 pivotally connected at 20, the member 18 being provided with a pin 21 which is adapted to enter a notch 22 formed in the member 19 to provide a stop when the parts are in the position shown in Fig. 2, the stop being arranged to permit the members of the link to swing slightly past the neutral position. A link 23 connects the member 18 with the foot-pedal. A spring 24 surrounds the fulcrum of the foot pedal 10, and its opposite ends bear respectively against the pedal and its support 10′ and holds said pedal normally in its upper position. The muffler spring (not shown) exerts a pull on the rod 15 and due to the out of alinement position of the pivotal connections of the link members 18 and 19, is adapted to hold the toggle link when in either of its positions of rest, that is to say, when in the position shown in Fig. 1 or when in the position shown in Fig. 2 thereby automatically locking the toggle link when in either of its positions of rest and holding the muffler valve in either its closed or opened position. A plurality of apertures 25 may be provided in the free end of the lever 14 for adjustably connecting link 15 thereby varying the movement thereof, as may be desired.

I preferably provide means to neutralize the action of the muffler spring, particularly when the parts are about to assume the position shown in Fig. 1, which means preferably comprises a spring 26 coiled about the pivot

27, one end of the spring passing through an aperture 28 in the lever 14 and being anchored to said lever and the other end thereof bearing against the under-side of the foot-board.

The modified construction shown in Fig. 5 is designed to control the operation of the valves of a plurality of mufflers, or one muffler which may be positioned out of alinement with the arm 14, and includes a shaft 29 rotatably mounted on the under-side of the foot-board to which crank arms 30 are adjustably secured, the crank arms being connected to the respective valves of the mufflers (not shown) by means of links 31. A crank arm 32 is secured to one of the shaft and has the toggle link 17 connected thereto, the crank arm 32 functioning in the same manner as the lever 14 shown in the preceding figures. This arrangement permits one toggle mechanism to open and close the valves of a plurality of mufflers simultaneously.

I claim:

1. A controlling device for a muffler comprising a pivoted operating member, a toggle mechanism operatively connected with the valve member of the muffler, means operatively connecting said operating member to said toggle mechanism whereby the valve member of said muffler may be opened and closed, and resilient means associated with said toggle mechanism for holding said valve member in its closed position.

2. A controlling device for a muffler comprising a pivoted operating member, a toggle mechanism shiftable to either side of neutral and operatively connected with the valve member of the muffler, means operatively connecting said operating member to said toggle mechanism whereby the valve member of said muffler may be opened and closed, and resilient means associated with said toggle mechanism for holding said valve member in either its open or closed position.

3. A controlling device for a muffler comprising a lever having one end pivoted to a support, a toggle link adapted to be positioned either side of neutral, one end of said link being connected to said lever and the other to a support, means connecting said lever with the valve of said muffler, and means adapted to position said toggle link on either side of neutral thereby opening or closing said valve.

4. A controlling device for a muffler comprising a lever having one end pivoted to a support, a toggle link adapted to be positioned either side of neutral, one end of said link being connected to said lever and the other to a support, means connecting said lever with the valve of said muffler, means adapted to position said toggle link on either side of neutral thereby opening or closing said valve, and a spring associated with said toggle link and adapted to hold said valve in its closed position.

5. A controlling device for a muffler comprising a lever having one end pivoted to a support, a toggle link adapted to be positioned either side of neutral, one end of said link being connected to said lever and the other to a support, means connecting said lever with the valve of the muffler, means adapted to position said toggle link on either side of neutral thereby opening or closing said valve, and a spring adapted to hold said toggle link in either of said positions.

6. A controlling device for a muffler comprising a foot-pedal pivotally mounted on the foot-board of an automobile, a lever having one end pivoted to a support, a toggle link adapted to be positioned either side of neutral, one end of said link being connected to said lever and the other end to a support, means connecting said lever with the valve of the muffler, means connecting said foot-pedal with said link, whereby said link may be positioned on either side of neutral by manipulating said foot-pedal and said valve opened or closed, and a spring connecting the free end of said lever with a support and adapted to hold said link in either of said positions.

7. A controlling device for a muffler comprising a lever having one end pivoted to a support, a toggle link adapted to be positioned either side of neutral, one end of said link being connected to said lever and the other to a support, means connecting said lever with the valve of the muffler, means adapted to position said link on either side of neutral thereby opening or closing said valve, a spring adapted to hold said link in either of said positions, and a second spring associated with said link and adapted to neutralize the action of said first mentioned spring.

8. A controlling device for a plurality of mufflers comprising a supporting structure, a shaft mounted on said structure, means operatively connecting said shaft with the respective valves of said mufflers, a crank on said shaft, a toggle link adapted to be positioned on either side of neutral, one end of said link being connected to said crank and the other to said structure, means adapted to position said link on either side of neutral thereby simultaneously opening and closing said valves, and a spring adapted to hold said link in either of said positions.

9. A controlling device for a plurality of mufflers comprising a supporting structure, a shaft mounted on said structure, crank means on said shaft and operatively connected with the respective valves of said mufflers, a crank arm on said shaft, a tog-

gle link adapted to be positioned on either side of neutral, one end of said link being connected to said crank arm and the other to said structure, means adapted to position said link on either side of neutral thereby simultaneously opening and closing said valves, a spring connecting the free end of said crank arm with said structure, and a spring associated with said link and adapted to neutralize the action of said first mentioned spring.

In testimony whereof, I affix my signature.

JULIUS F. GOETZ.