United States Patent [19]

Shintani et al.

[11] **Des. 272,153**

[45] ** **Jan. 10, 1984**

[54] **FACSIMILE TRANSCEIVER**

[75] Inventors: **Takamasa Shintani**, Chigasaki; **Koyo Nagasawa**, Yokohama; **Hiroshi Takemura**, Sagamihara; **Tadashi Kikuchi**, Hiratsuka, all of Japan

[73] Assignee: **Matsushita Graphic Communication Systems, Inc.**, Tokyo, Japan

[**] Term: **14 Years**

[21] Appl. No.: **291,687**

[22] Filed: **Aug. 10, 1981**

[30] **Foreign Application Priority Data**

Mar. 2, 1981 [JP] Japan 56-8602

[51] **Int. Cl.** ..... **D14—01**

[52] **U.S. Cl.** **D14/94**

[58] **Field of Search** D14/94; D16/30, 31; 358/256, 286

[56] **References Cited**

U.S. PATENT DOCUMENTS

D. 231,129	4/1974	Case et al.	D16/31
D. 248,957	8/1978	Kitai et al.	D16/31
D. 263,600	3/1982	Furukawa	D16/31
D. 264,219	5/1982	Plumb et al.	D16/31
D. 266,169	9/1982	Yasutani et al.	D16/31

Primary Examiner—Jane E. Corrigan

Attorney, Agent, or Firm—Sughrue, Mion, Zinn, Macpeak and Seas

[57] **CLAIM**

The ornamental design for a facsimile transceiver, as shown.

DESCRIPTION

FIG. **1** is a front, top and right side perspective view of a facsimile transceiver showing our new design;
FIG. **2** is a rear elevational view thereof;
FIG. **3** is a top plan view thereof;
FIG. **4** is a bottom plan view thereof;
FIG. **5** is a left side elevational view thereof; and
FIG. **6** is a right side elevational view thereof.

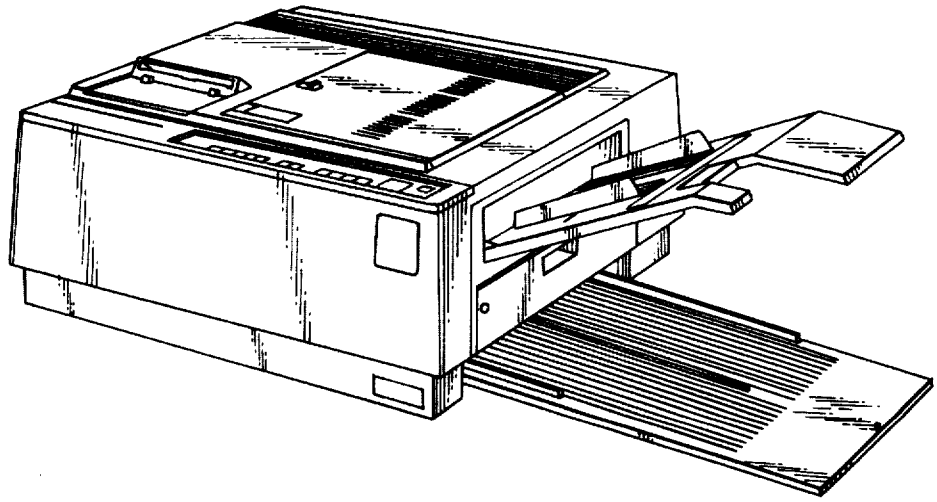

Fig. 1

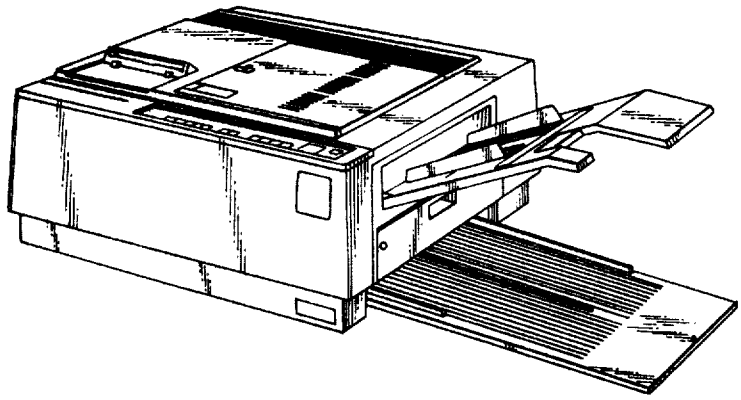

Fig. 2

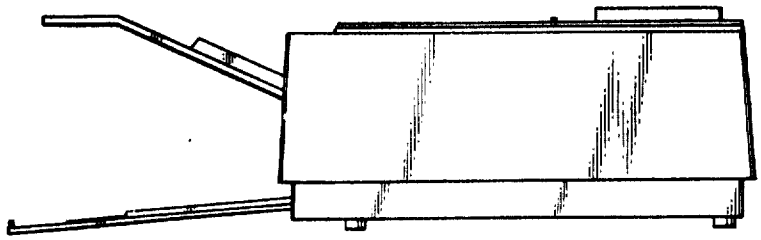

Fig. 3

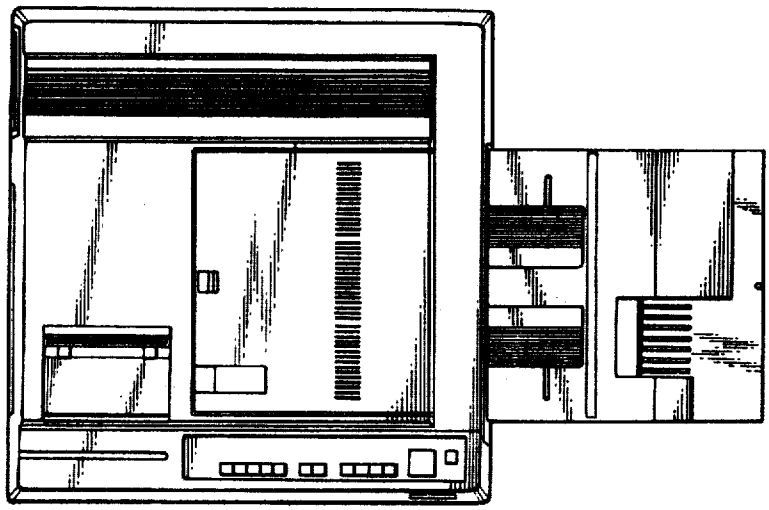

Fig. 4

