(No Model.) 2 Sheets—Sheet 1.

J. A. LANNERT & W. R. JEAVONS.

VAPOR BURNER.

No. 455,966. Patented July 14, 1891.

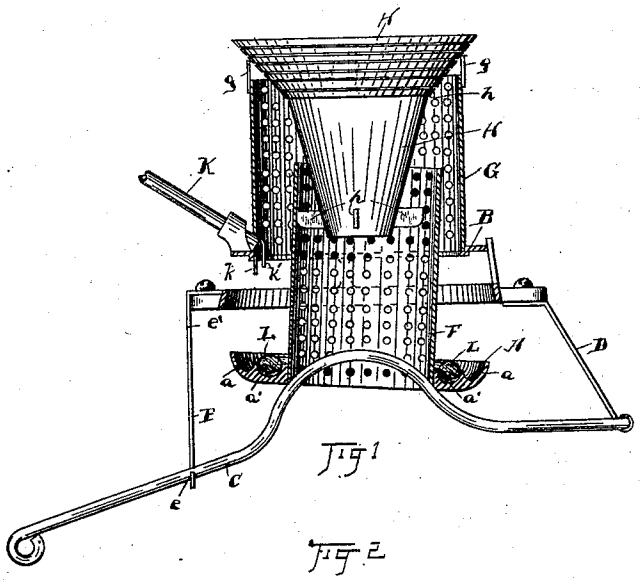

Fig 1

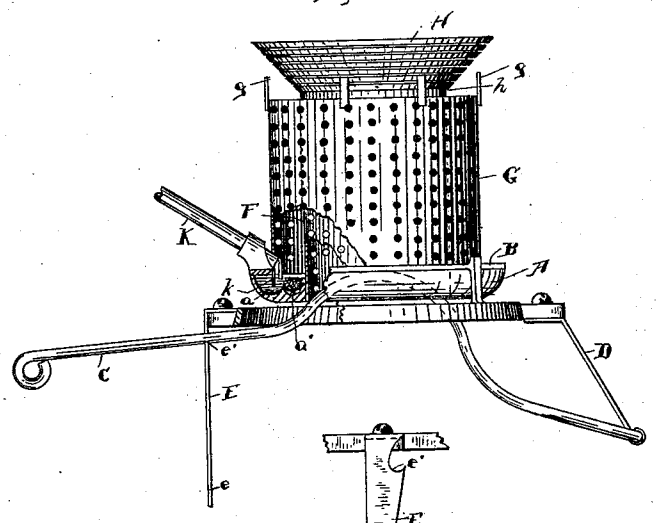

Fig 2

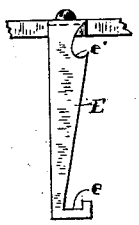

Fig 3

Witnesses
R. F. Moser.
H. L. McLane.

Inventors
John A. Lannert
William R. Jeavons.

By their Attorney
H. T. Fisher.

THE NORRIS PETERS CO., PHOTO-LITHO., WASHINGTON, D. C.

(No Model.) 2 Sheets—Sheet 2.

J. A. LANNERT & W. R. JEAVONS.

VAPOR BURNER.

No. 455,966. Patented July 14, 1891.

Fig. 4.

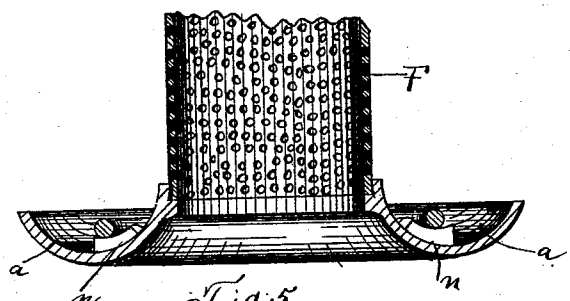

Fig. 5.

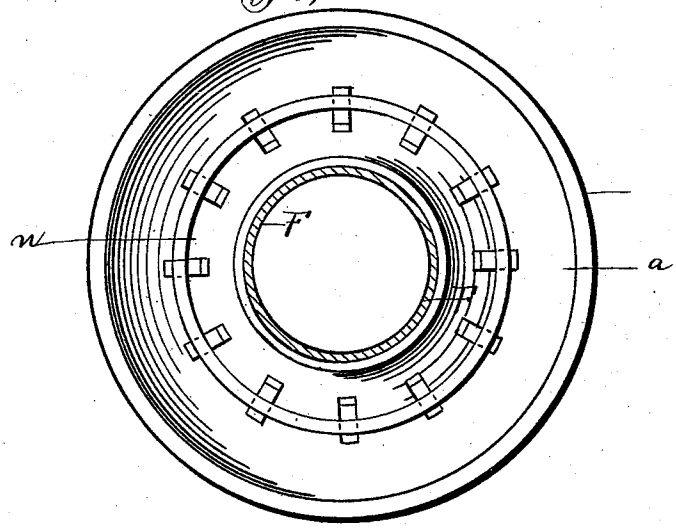

Fig. 6.

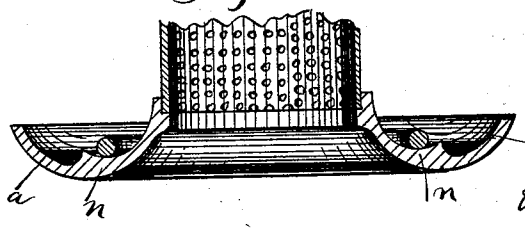

J. A. Lannert.
Wm. R. Jeavons
INVENTOR,

WITNESSES:
Victor Schneider
Victor J Evans

BY H. F. Fisher
ATTORNEY.

THE NORRIS PETERS CO., PHOTO-LITHO., WASHINGTON, D. C.

UNITED STATES PATENT OFFICE.

JOHN A. LANNERT AND WILLIAM R. JEAVONS, OF CLEVELAND, OHIO.

VAPOR-BURNER.

SPECIFICATION forming part of Letters Patent No. 455,966, dated July 14, 1891.

Application filed November 6, 1890. Serial No. 370,552. (No model.)

To all whom it may concern:

Be it known that we, JOHN A. LANNERT and WILLIAM R. JEAVONS, citizens of the United States, residing at Cleveland, in the county Cuyahoga and State of Ohio, have invented certain new and useful Improvements in Vapor-Burners; and we do hereby declare that the following is a full, clear, and exact description of the invention, which will enable others skilled in the art to which it appertains to make and use the same.

The invention relates to vapor-burners, and is an improvement on a patent issued to William R. Jeavons, No. 438,548. In the said patent a burner is shown which is designed more especially to consume the lighter grades of hydrocarbons, such as gasoline and the like, although heavier oils may be burned therein with advantage.

The present invention is designed more especially to burn the heavier grades of hydrocarbons, such as kerosene or the like.

The invention therefore consists in the construction and combination of parts constituting the burner, substantially as shown and described, and particularly pointed out in the claims.

In the accompanying drawings, Figure 1 is a vertical central sectional elevation of the burner, showing the parts separated as for initial starting. Fig. 2 is a side elevation of the burner with the parts in position as when in use and a portion broken away in section to show the relation of the bowl to the supply-pipe and its drip mechanism and shield. Fig. 3 is a front elevation of the locking-hanger adapted to support the operating lever or arm. Fig. 4 is a cross-section of bowl, showing a modification of the inner groove for holding the wick. Fig. 5 is a plan view of the same. Fig. 6 is another modification, showing a ledge for supporting the wick.

A represents the bowl which constitutes the lower portion of the diffusing or vaporizing chamber, and B is the upper portion, which, when the parts are brought togther, contitutes a cover for the outer portion of the bowl A, forming a chamber beneath the cover. The plate B is designed to be stationary or fixed and might constitute a part of the top plate of a stove supported on legs, as usual.

The bowl A is movable within certain limits to and from the part B by means of a lever or arm C, hinged at one end on a fixed bar or strap D, and, extending across beneath the bowl, is bent upward about midway of its length, so that the bent portion will come into the opening in the center of the bowl and serve to support the bowl, and the opposite end of the lever is held by a notched hanger E. When the bowl is down, as shown in Fig. 1, for initial starting of the burner, the lever C rests on the notched extremity *e*, and when it is raised, as in Fig. 2, and the burner in operation the lever occupies the upper notch *e'*. By thus lowering the burner-bowl it is made accessible to the operator, so that the oil therein may be conveniently ignited, whereupon the bowl is instantly restored to its raised position, as shown in Fig. 2. The said bowl is provided with a perforated tube F, arranged about its inner open space, thus forming an air-draft up through the center of the bowl, and the upper plate or cover B has a perforated tube or chimney G so arranged that an open combustion-chamber is formed between said tubes when in working position, substantially as shown in the patent above referred to. A conical air and flame deflector H is shown as extending into the inside tube and resting, when said tube is down, on projections *g*, fixed to the outer tube. When the inner tube is raised, the deflector H rests upon its upper end, the neck of the deflector being slightly shouldered at *h* to form a seat for the end of the tube. This arrangement always brings the tube and deflector to their proper positions with relation to each other.

K represents an oil-supply pipe, which is fixed by suitable means to the stationary plate B. At the point of delivery of the supply-pipe is a drip-extension *k* or its equivalent, which leads from the end of the pipe below the plate B in such manner that when the bowl A is raised the oil will be conducted into the outer groove or channel *a* of the burner below, and when the bowl is lowered it will conduct the oil into the inner groove or channel *a'*, which contains the wick L.

Thus in starting the burner when the bowl A is lowered, as seen in Fig. 1, the bowl and its combustion-tube are somewhat tilted forward by reason of the construction and arrangement of the lever C and the pivot bar or rod D, which extends some distance below the bowl, so that the inner groove or channel a' is thrown directly beneath the oil conveyer or conductor k, and thus the oil is caused to drop upon the wick L into said inner channel; but when the parts are raised and the tube and bowl are in operating position the oil-conductor occupies the relation to the other parts seen in Fig. 2, where the oil is conveyed into the outer channel a, which has no wick, and which is partly or wholly overlapped by the projecting plate B, thus forming a diffusing as well as vaporizing chamber beneath said plate.

Close to the drip-extension k and extending from the upper portion of the supply-pipe is a shield k' or diverter, which serves to prevent any vapor that may be generated in the supply-pipe from entering directly into the combustion-chamber and increasing the flame at this point. This shield diverts such vapor to the diffusing-chamber, thus contributing to produce an equal flame at all points. It will be understood, however, that the wick L serves only the purpose of initial starting, and it performs no function and has no use whatever in the burner as a part thereof when the burner is under headway and consuming vapor instead of oil. As before stated, this burner is intended to use heavy hydrocarbons, with which initial starting is not easily accomplished on a bare metallic surface. It can be promptly effected by burning the oil from a wick, and hence the two channels or grooves in the burner-bowl, the inner one being designed to be used with a wick or its equivalent simply for initial starting and the outer one when the burner is under headway, in which case it serves both as a vaporizing-chamber and a distributing-chamber to convey the vapor around to all sides of the burner, and thus secure a uniform flame at all points.

As here shown, the wick L lies upon the bottom of the channel a' and when saturated with oil is lighted, and, burning from its surface, heats the burner sufficiently to vaporize the oil as it drips into the outer groove or channel a. The oil in the inner channel being consumed, vaporization goes on only in the outer one, and, in fact, mostly, if not wholly, at the point of supply, whence the vapor travels around under the overhanging cover B to give an equal pressure and flow of vapor all around the burner. The vapor rising between tubes F G is mixed with air entering through said tubes and is consumed, yielding a beautiful blue flame.

If preferred, the bowl might have a single groove and the wick L be supported above the bottom of the bowl, as in Fig. 4, in which $n\,n$ are projections which hold the wick above the bottom of the bowl, so that vaporization may occur on the metallic surface of the bowl apart from the wick when the bowl is heated. Fig. 5 shows the plan of the projections $n\,n$. Fig. 6 has one projection or ledge n, which extends the entire length of the channel. Upon this projection the wick L is placed. The wick is raised above and away from the inflowing oil when the burner is under headway to allow the oil to be vaporized, as in the case of a double-grooved burner, directly from the heated metallic surface and distributed, as above set forth. Thus all carbon deposit will be left on the metallic surface, where it can be readily removed, and the wick is kept free therefrom and will last for an indefinite period.

If the oil were allowed to drop in drop by drop by reason of its rapid evaporization, it might cause the flame to pulsate or fluctuate. To obviate this a conductor k is provided, as above described, from the mouth of the pipe downward. This conductor may be made of a strip extending from the pipe to the bowl or several links of chain or the like. Thus the oil is given a steady even flow into the bowl and the pulsating tendency is avoided. The vaporizing-bowl is free to be removed, and this makes it convenient to cleanse the same when carbon accumulations occur.

The deflector H has guides h' at its lower extremity for the inner combustion flue or tube F, which guides serve to hold the flue in proper position when raised or lowered. These guides might be placed on the flue itself to bear against the outer flue G; but that would more or less obstruct the combustion-chamber.

The matter pertaining to the deflector H and the deflector, substantially as shown and described, in itself and its connections are not broadly claimed herein, but are so claimed in our application, Serial No. 368,177, filed October 15, 1890.

Having thus described the invention, what we claim as new, and desire to secure by Letters Patent, is—

1. In a vapor-burner, the vaporizing-bowl provided with a wick, the supply-pipe, and a conveyer for the oil between the end of the pipe and the bowl, and the combustion-tubes, substantially as described.

2. The removable vaporizing-bowl having concentric grooves, and a wick in one groove, an oil-supply pipe to deliver the oil into said grooves, and the combustion-tubes, substantially as described.

3. The bowl of the burner having concentric grooves, and a wick in the inner groove for initial lighting, a cover extending part way over said bowl, and the combustion-tubes, substantially as described.

4. A hydrocarbon-burner having a stationary top section provided with a supply-pipe and a movable vaporizing lower section, substantially as described.

5. The top section of the burner forming a

cover and a stationary supply-pipe, in combination with the vertically-movable lower section of the burner, a lever supporting said lower section, and flues connected with both sections of the burner, substantially as described.

6. The fixed upper section of the burner and the movable lower section, and combustion flues or tubes connected, respectively, with said sections and guides for the inner tube, substantially as described.

7. The fixed upper section of the burner and the movable lower section, combustion-flues on said sections, respectively, and a separate air and flame deflector over the flues, substantially as described.

8. The stationary upper section of the burner and the movable lower section, in combination with a lever supporting the lower section and catches for the lever at different elevations, substantially as described.

9. The stationary upper section of the burner, the movable lower section, and the lever supporting the lower section swiveled on a lower plane than the lower section, so that it throws it out of line when being lowered, substantially as described.

10. In a vapor-burner, a fixed upper section and movable lower section having a wick, and mechanism whereby the lower section is supported and moved laterally to receive the drip on the wick, substantially as described.

11. In a vapor-burner, the lower section of the burner forming a bowl, the upper section of the burner forming an annular ring for the tube, one removable from the other, and guides to bring one concentric with the other, substantially as described.

12. In a vapor-burner, a lower section forming a bowl, an upper section forming an annular ring for the tube, one removable from the other, and mechanism for moving one from the other and securing one to the other, substantially as described.

13. A lower section of the burner forming a bowl, an upper section forming an annular ring for the tube, one removable from the other, combustion flues or tubes connected to said sections, and guides for the flues, substantially as described.

14. In a vapor-burner, a lower section forming a bowl, an upper section forming an annular ring for the tube, one removable from the other, and centering mechanism for moving one to and from the other, substantially as described.

Witness our hands to the foregoing specification this 28th day of October, 1890.

JOHN A. LANNERT.
WILLIAM R. JEAVONS.

Witnesses:
H. T. FISHER,
NELLIE L. MCLANE.