Jan. 8, 1929.

C. F. GODDARD

1,698,159

GREASE PUMP

Original Filed Feb. 4, 1926 3 Sheets-Sheet 1

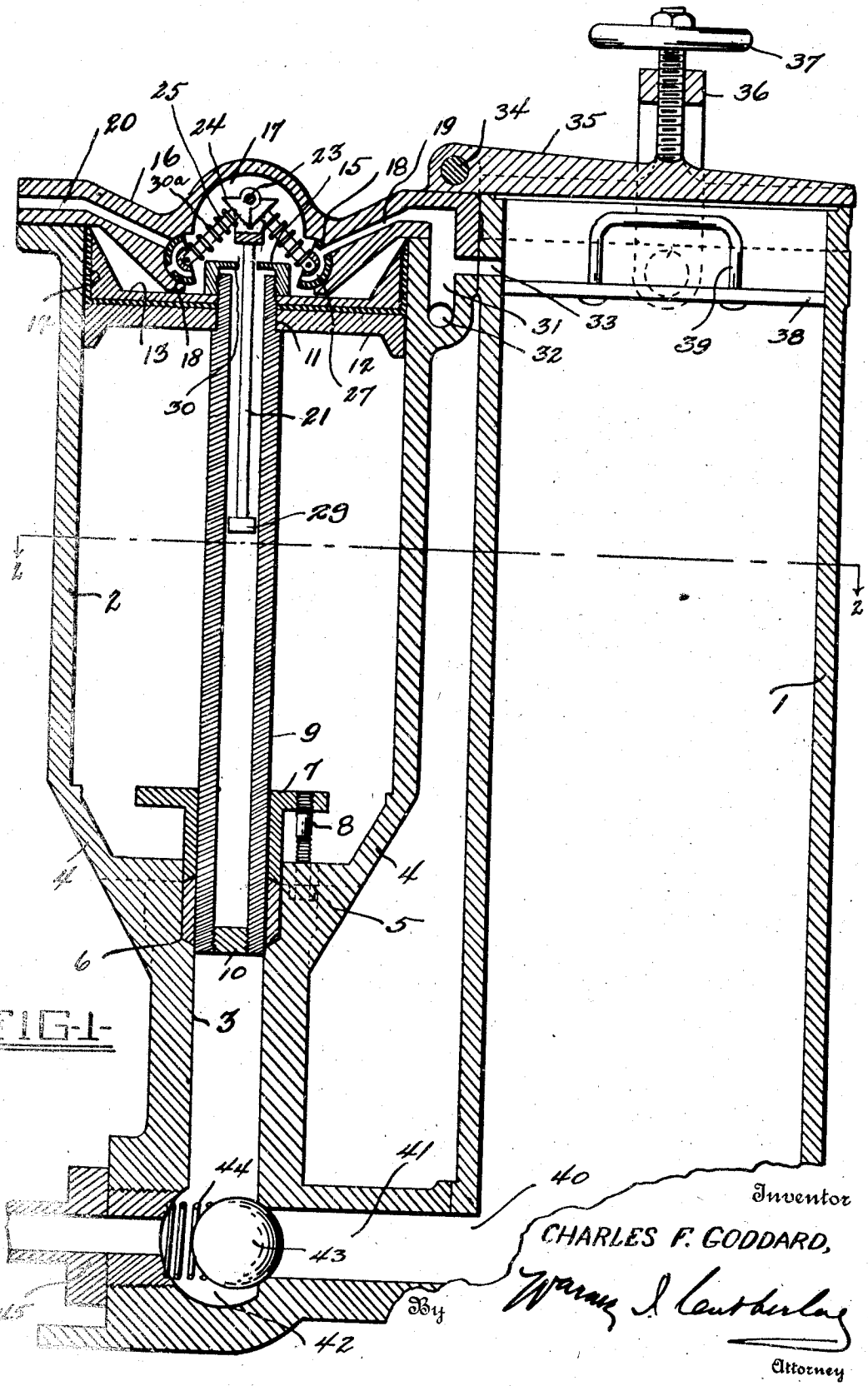

FIG-1-

Inventor

CHARLES F. GODDARD,

By

Attorney

Jan. 8, 1929.

C. F. GODDARD

1,698,159

GREASE PUMP

Original Filed Feb. 4, 1926 3 Sheets-Sheet 2

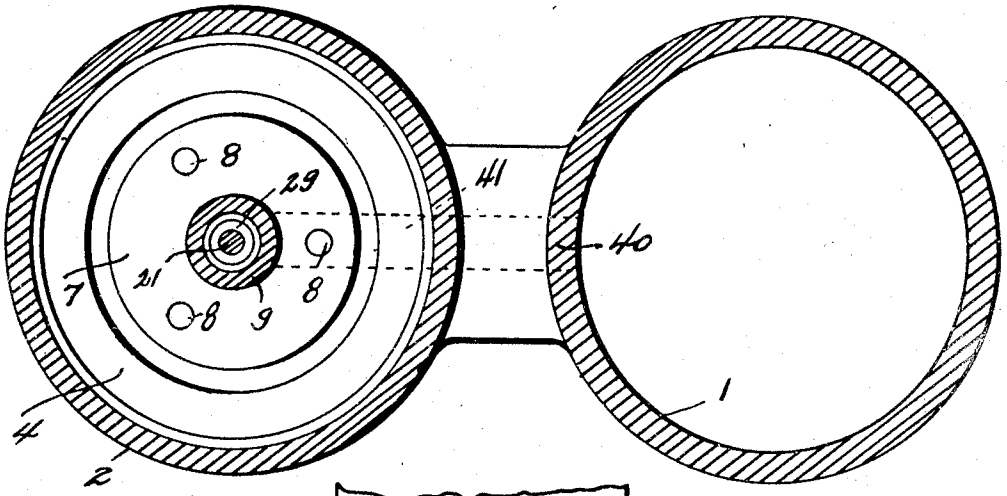

-FIG-2-

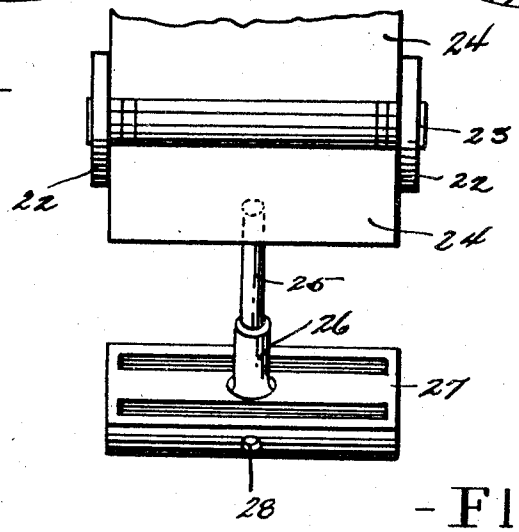

-FIG-3-

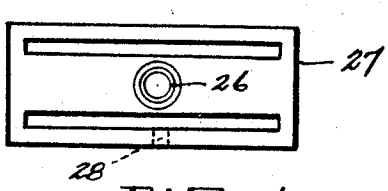

-FIG-4-

Inventor
CHARLES F. GODDARD
BY Warren I. Cutberley
Attorney

Jan. 8, 1929.

C. F. GODDARD

1,698,159

GREASE PUMP

Original Filed Feb. 4, 1926 3 Sheets-Sheet 3

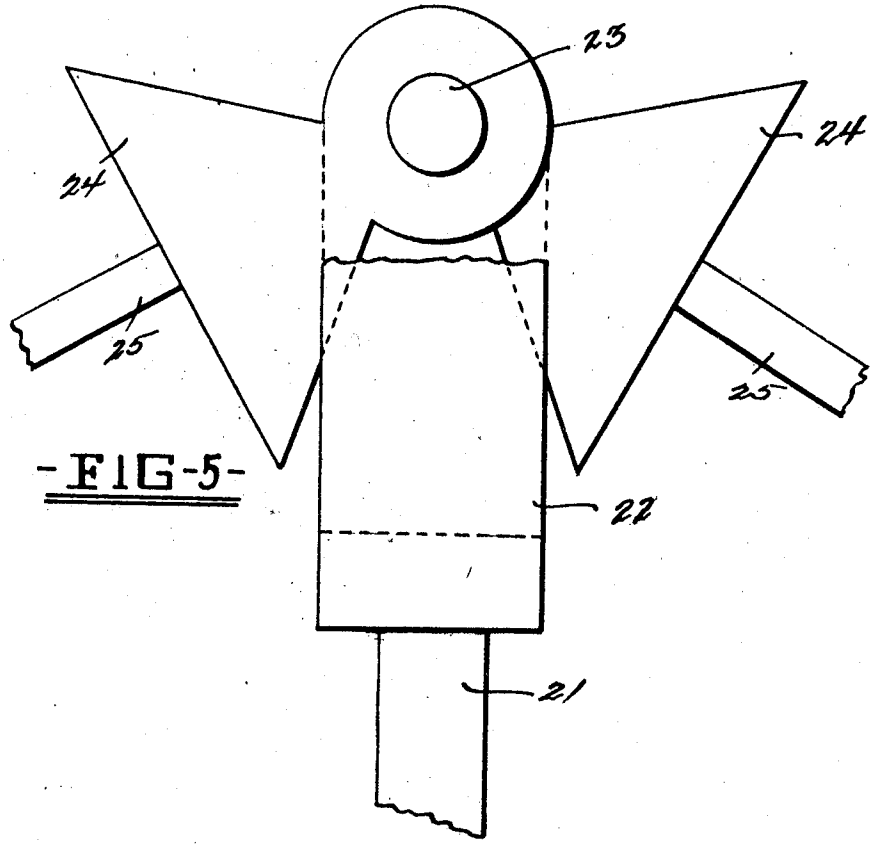

-FIG-5-

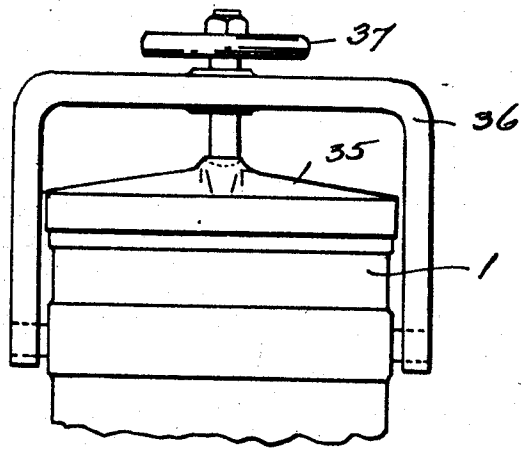

-FIG-6-

Inventor

CHARLES F. GODDARD,

By

Attorney

Patented Jan. 8, 1929. 1,698,159

UNITED STATES PATENT OFFICE.

CHARLES F. GODDARD, OF DENVER, COLORADO, ASSIGNOR TO GODDARD SPECIALTIES COMPANY, INCORPORATED, A CORPORATION OF COLORADO.

GREASE PUMP.

Application filed February 4, 1926, Serial No. 85,953. Renewed November 14, 1928.

My invention, in its broad aspect, has reference to improvements in grease pumps of the pneumatic type for use in pumping stiff grease under very high pressure for the lubrication of automobile or other bearings; and more particularly it is my purpose to attain by novel mechanism and a unique construction and arrangement of parts not only the expulsion of stiff grease under very high pressure, but the return of the pump piston to its position for commencing another power stroke by the pressure of the grease or fluid to be pumped thereby providing for automatic and continuous operation of my pump as long as the supply of grease holds out, and that without the use of cam devices, gears, or other complicated timing or control mechanism.

My invention contemplates broadly the utilization of a sealed container for holding grease, or other fluid to be pumped, under moderate pressure, and a single acting cylinder to receive the said grease or other fluid and eject it at a much higher pressure. In the grease container I provide a follower to evenly distribute pressure upon the body of grease, and the pumping cylinder is formed with a relatively large compression chamber in which a head carried by the piston is designed to travel. The head is formed with a much greater diameter than the diameter of the piston with the result that for a given number of pounds of air or fluid pressure per square inch upon the head, a relatively greater pressure per square inch of pumping surface will be exerted by the piston upon the body of grease to be expelled. Automatic valve apparatus controlled by the stroke of the piston is provided for inducing simultaneously substantially the same air pressure upon the follower in the grease container and upon the head of the piston in the compression chamber, and then at the termination of a power stroke exhausting the compression chamber without cutting off the supply of compressed air or fluid to the grease container thereby causing the piston to be automatically returned by the pressure of the grease or other fluid in the system to its normal position for another power stroke, at which time the valve apparatus is actuated to again admit compressed air or fluid to the compression chamber; the exhaust port from the compression chamber being closed.

Other important objects and advantages of my pump may be briefly defined as follows; first, I provide a valve structure which is both positive and simplified to the end that possible broken parts may be readily replaced and adjustments made with facility; second, my entire assembly is constructed so that it may be cast and machined at relatively small cost; third, by means of a check device grease in the pumping cylinder is prevented from being forced back into the grease container, and; fourth, my pumping cylinder and its compression chamber is so constructed that the cross-sectional areas or diameters thereof may be relatively varied to change the degree of consequent pressure exerted by the piston per poundage of air or fluid pressure in the compression chamber.

While I have in the present instance defined for the sake of illustration a specific form of my pump device it will be understood that I do not desire to limit myself except as may be indicated by the scope of the claims appended hereunto and forming a part of this specification.

In the drawings wherein is illustrated an embodiment of my invention;—

Figure 1 is a sectional side elevation of my apparatus,

Figure 2 is a view taken on the line 2—2 of Figure 1,

Figure 3 is a perspective view of one of my valve members, the spring being omitted, and also shows a portion of the supporting structure for the same,

Figure 4 is a top plan view of one of the valve heads,

Figure 5 is an enlarged end view of a portion of my valve structure, and

Figure 6 is a detail view of the top portion of my grease container and the hinged cap therefore; the retaining bail being shown in detail.

In the drawings, wherein like characters of reference are used to designate like or similar parts throughout the several views;—

The numeral (1) designates my grease container which may be cylindrical, rectangular or any other suitable shape, and (2) the compression chamber of my pump element, the pump cylinder of the same being designated by (3). The compression chamber (2) is of much greater diameter than the pump cylinder (3) and is connected to the pump cylinder by a gradually reduced portion, or invert-

ed conical web portion (4). The chamber (2), web (4), and cylinder (3) are cast in a unit which is attached to the grease container (1). The web or reduced portion (4) has a thickened wall (5) adjacent the cylinder (3) which is provided with an annular recess (6) for receiving packing held in place by a flanged packing gland (7). The gland (7) is maintained in position by screws, as shown at (8), engaging in the portion (5), and through said gland and extending into the cylinder (3) is a hollow piston (9), the lower end of which is closed by a plug (10). The upper end of the piston is reduced as at (11) to form a seat for the head (12) which is of approximately the same diameter as the compression chamber (2), and has a face plate (13) between which and the head is a packing element (14). The plate (13) and packing element, together with the head (12) are held in place by a nut (15) to form a rigid assembly.

Arranged to close the upper end of the compression chamber (2) is a cap (16) formed with a semi-cylindrical valve chamber (17) and semi-cylindrical valve seats (18) adjacent thereto and which communicate with passages (19) and (20) respectively constituting the inlet and outlet ports for the chamber. Slidably mounted in the hollow piston is a shaft (21), the upper end of which is bifurcated to form arms (22) between which a pin (23) is carried. On the pin (23) are pivotally mounted a pair of triangular members (24) each carrying a pin (25) which is slidably received in a sleeve (26) provided in each of two semi-cylindrical valve heads (27) rotatably engaging upon the seats (16) and provided with ports (28) adapted to register, upon occasion, with passages (19) and (20) respectively. The shaft (21) has a head (29) formed on its lower end for engagement with the flange (30) surrounding the opening in the piston head nut (15) so that when the piston (9) reaches approximately its downward limit of movement (completion of its stroke) the shaft is pulled down to rotate the valves (27). The pins (25) are slidable in the sleeves (26) to compensate for the movement of the shaft, and springs (30) are provided thereon to hold them normally extended as shown in Figure 1.

The passage (19) communicates with a chamber (31) into which is tapped a compressed air or fluid intake passage (32) connected with an air or fluid compressor (not shown), and also communicating with the chamber (31) is a port (33) near the top of the grease container (1).

Hingedly mounted as at (34) on the cap (16) is a cover plate (35) for the container (1), same being normally held in place thereon by a bail (36) and screw (37), and within the container (1) is a follower plate (38) having a handle (39), and designed to evenly distribute pressure upon the body of grease therein. To remove the cover plate (35) the screw (37) is loosened and the bail (36) swung down.

Formed in the bottom of the grease container (1) is a port (40) which communicates with a passage (41) which in turn communicates with a substantially semi-spherical chamber (42) in the base of the pump cylinder (3). Retained in the chamber (42) is a ball (43) which is spring seated, as at (44), to normally close the passage (41), and said chamber (42) has tapped therein a nipple (45) which is adapted to receive a grease discharge pipe (not shown) which should preferably be provided with a cut-off valve to control the distribution of grease to the bearings of a motor vehicle or the like.

In operation, the valves are set as in Figure 1 at the beginning of a power stroke, the passage (19) being open and the passage (20) closed. The grease container (1) is filled with stiff grease or other fluid to be pumped; the cover plate (35) being first removed by backing the retaining screw (37) to release the bail (36), and the follower plate (38) is withdrawn. The follower plate and cap are then replaced and air or other fluid is admitted under pressure through the passages (33) and (19) to the grease container above the follower plate, and to the compression cylinder (2) above the head (12). Pressure of the air on the follower (38) forces the grease contained in the container (1) through the port (40), and passage (41) past the ball check valve (43) and into the pump cylinder (3) below the piston (9). The pressure of air admitted through the passage (19) pressing on the head (12) forces the piston (9) down discharging the grease contained in the pump cylinder (3) and chamber (42) through nipple (45) to the grease discharge pipe (not shown). When the piston (9) reaches the lower end of its travel the shaft (21) is pulled down, actuating the valves (27) to close passage (19) and open the passage (20) thereby permitting the air to be discharged from the compression chamber (2). Whereupon the trapped air (under pressure) in the grease container (1) continues to force the follower plate (38) down thereby forcing some of the grease in said container past the valve (43) and against the end of the piston (9) with the result that the piston is pushed upward to its initial position thereby moving the valves to close passage (20) and again open passage (19) to start another stroke. This cycle of operation is repeated until the body of grease in container (1) is exhausted with a consequent great saving in time and labor over certain grease pumps now on the market.

While in the foregoing, there has been illustrated in the drawings and described in the specification such combination and

arrangement of elements as constitute the preferred embodiments of my invention, it is nevertheless desired to emphasize the fact that interpretation of the invention should only be conclusive when made in the light of the subjoined claims.

I claim;—

1. In a device of the type described, the combination of a pumping unit having a vent, and a container for substance to be pumped, a source of fluid pressure supply in constant communication with the container to normally urge the contents from said container, said pump unit having a connection with said container for receiving the substance discharged therefrom, said pump unit also having a connection with the source of fluid supply, a valve device associated with the pump unit and movable thereby to open the pump vent and close the fluid pressure supply at the termination of its discharge stroke, and close the pump vent and open the fluid pressure supply when the pump is in position for its power stroke, and a check valve in the connection between the container and pump and influenced by pressure of substance in the container to open the connection between the container and pump unit at the end of the power stroke of the pump unit, and close the connection between the container and pump unit at the beginning of the power stroke of the pump.

2. In a device of the type described, the combination of a differential pumping unit having a vent, and a container for substance to be pumped, a source of fluid pressure supply in constant communication with said container to normally urge the contents from said container, said pump unit having a connection with said container for receiving the substance discharged therefrom, said pump unit also having a connection with the source of fluid supply, a valve device associated with the pump unit and movable thereby to open the pump vent and close the fluid pressure supply at the termination of its discharge or power stroke, and close the pump vent and open the fluid pressure supply when the pump is in position for its power stroke, and a spring pressed ball check valve associated with the connection between the container and pump and influenced by pressure of substance in the container to open the connection between the container and pump unit at the end of the power stroke of the pump unit, and close the connection between the container and pump unit at the beginning of the power stroke of the pump.

3. In a device of the type described, the combination of a pumping unit having a compression and a pumping chamber, and a double headed piston operable in said chambers, and a container for substance to be pumped, a source of fluid pressure supply in constant communication with the container to normally urge the contents from said container, the pumping chamber of the pump unit having a connection with said container for receiving the substance discharged therefrom, the compression chamber of the pump unit having a connection with the source of fluid supply and provided with a vent, a valve device associated with the pump unit and movable with the piston to open the vent and close the fluid pressure supply at the termination of the discharge stroke of the piston, and close the vent and open the fluid pressure supply when the piston is in position for its power stroke, and a check valve associated with the connection between the container and pumping chamber and influenced by pressure of substance in the container to open connection between the container and pump unit at the end of the power stroke of the piston, and close the connection between the container and pump unit at the beginning of the power stroke of the piston.

4. In a device of the type described, the combination of a pumping unit having a compression and a pumping chamber, and a double headed differential piston operable in said chambers, and a container for substance to be pumped, a source of fluid pressure supply in constant communication with the container to normally urge the contents from said container, the pumping chamber of the pump unit having a connection with said container for receiving the substance discharged therefrom, the compression chamber of the pump unit having a connection with the source of fluid supply and provided with a vent, a valve device connected with the piston and movable thereby to open the vent and close the fluid pressure supply at the termination of the discharge stroke of the piston, and close the vent and open the fluid pressure supply when the piston is in position for its power stroke, and a ball check valve associated with the connection between the container and pumping chamber and influenced by pressure of substance in the container to open the connection between the container and pump unit at the end of the power stroke of the pump unit, and close the connection between the container and pump unit at the beginning of the power stroke of the pump, said valve being normally spring seated in its closing position.

5. In a device of the type described, the combination of a pumping unit having a vent, and a container for substance to be pumped, a source of fluid pressure supply in constant communication with the container to normally urge the contents from said container, said pump unit having a connection with said container for receiving the substance discharged therefrom, said pump unit also having a connection with the source of fluid supply, a valve unit associated with the pump unit and having a pair of simul-

taneously operable valve devices movable respectively to open the pump vent and close the fluid pressure supply at the termination of the discharge stroke of the pump, and close the pump vent and open the fluid pressure supply when the pump is in position for its power stroke, and a check valve in the connection between the container and pump and influenced by pressure of substance in the container to open connection between the container and pump unit at the end of the power stroke of the pump unit, and close the connection between the container and pump unit at the beginning of the power stroke of the pump.

In testimony whereof, I affix my signature hereunto.

CHARLES F. GODDARD.