April 16, 1968 R. F. DONKIN 3,377,747

COMBINATION DOOR INSERT KIT

Filed Jan. 11, 1965 3 Sheets-Sheet 1

Fig. 1.

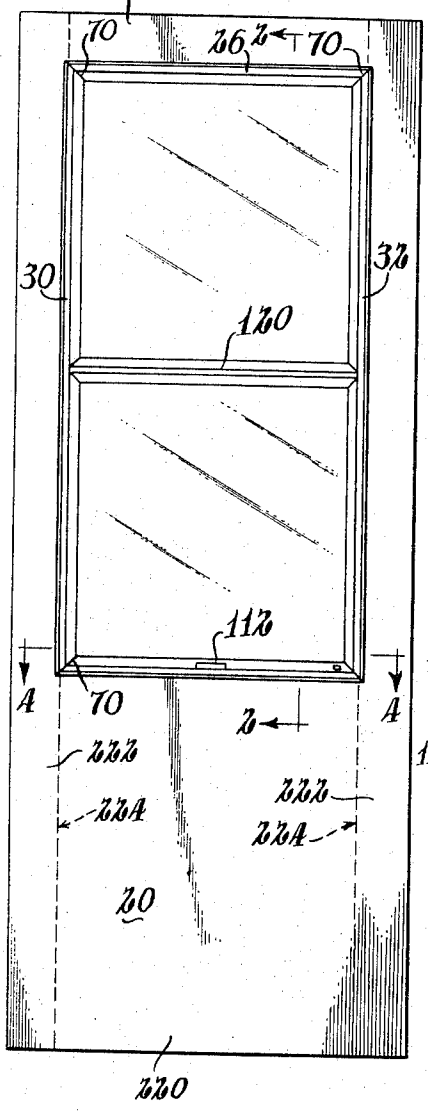

Fig. 2.

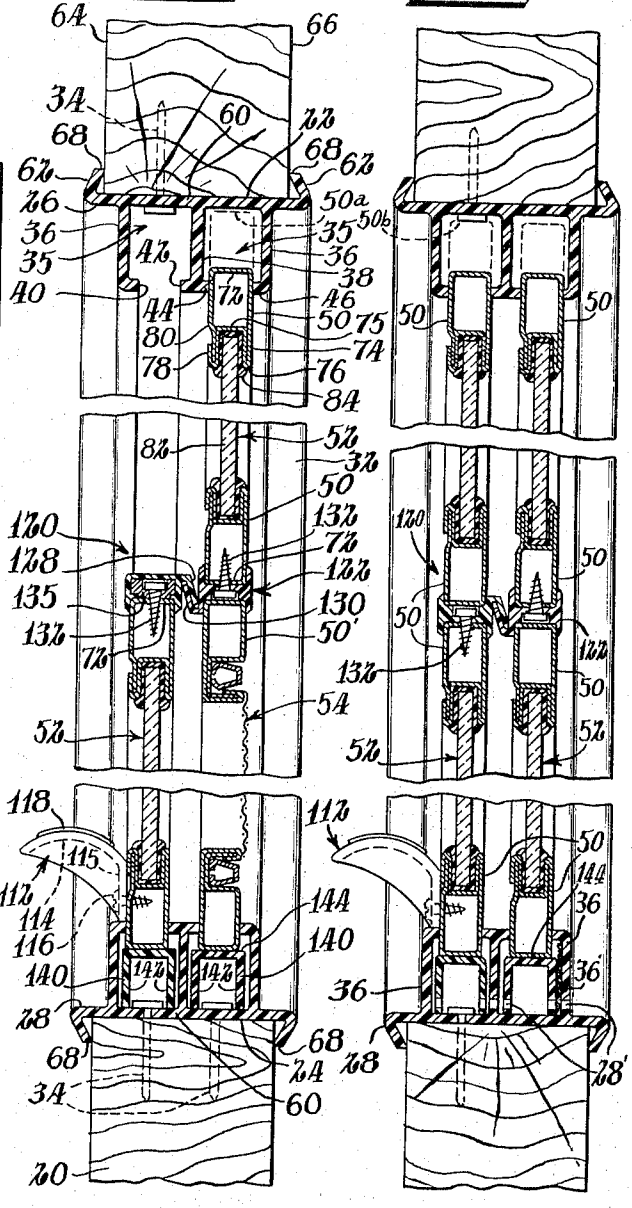

Fig. 3.

INVENTOR
RALPH F. DONKIN

BY
Petherbridge, O'Neill & Aubel
Attys.

April 16, 1968 R. F. DONKIN 3,377,747

COMBINATION DOOR INSERT KIT

Filed Jan. 11, 1965 3 Sheets-Sheet 2

FIG. 4.

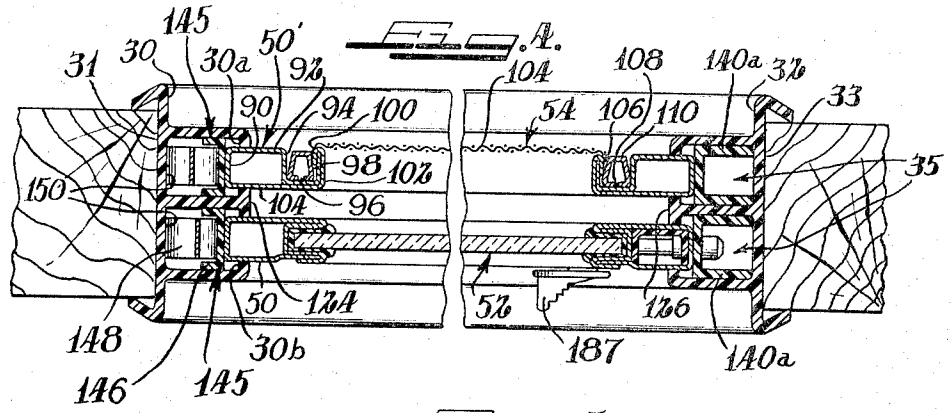

FIG. 5.

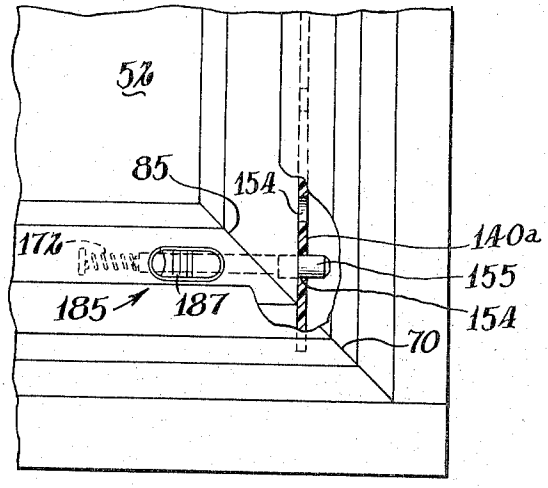

FIG. 8.

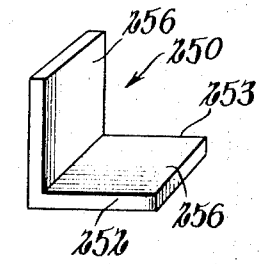

FIG. 7.

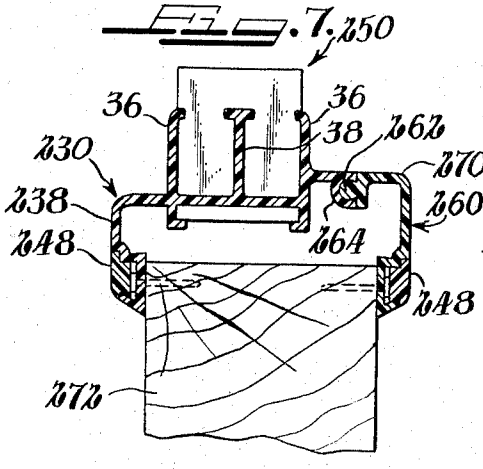

FIG. 6.

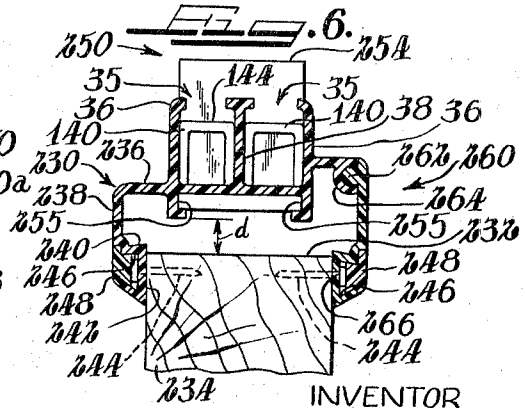

INVENTOR
RALPH F. DONKIN

BY
Petherbridge, O'Neill & Aubel
Attys.

April 16, 1968 R. F. DONKIN 3,377,747

COMBINATION DOOR INSERT KIT

Filed Jan. 11, 1965 3 Sheets-Sheet 3

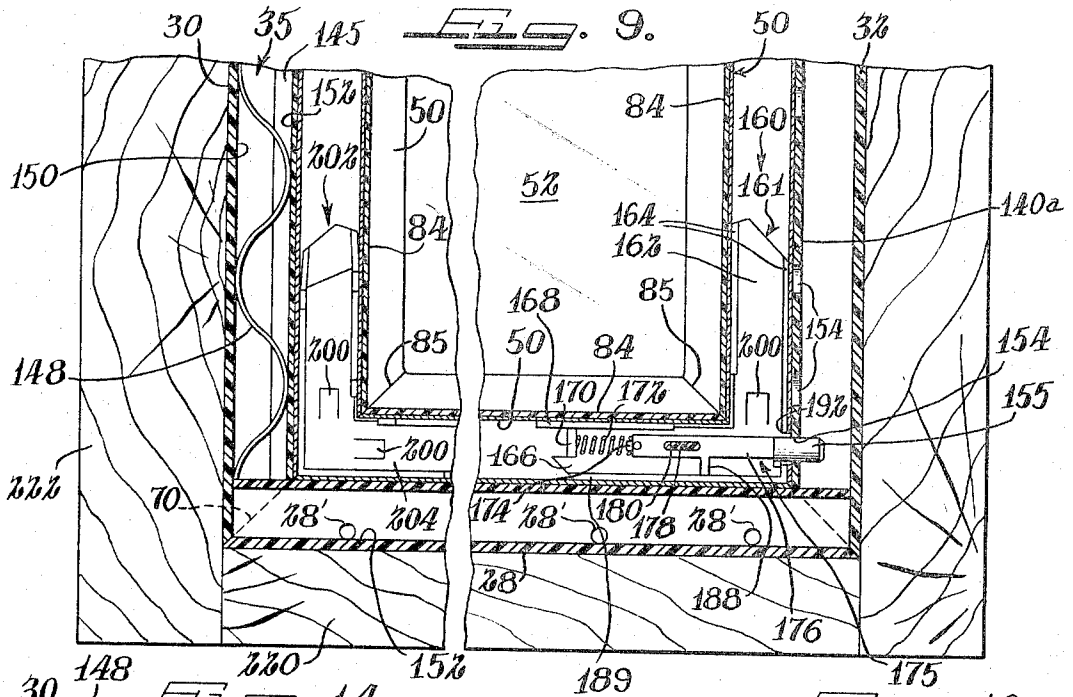

FIG. 9.

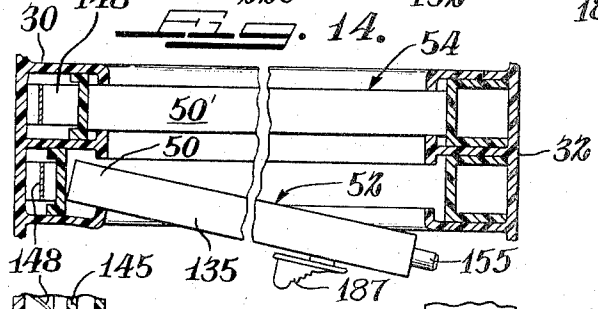

FIG. 14.

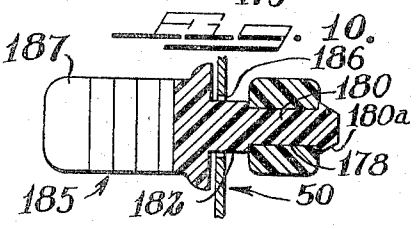

FIG. 10.

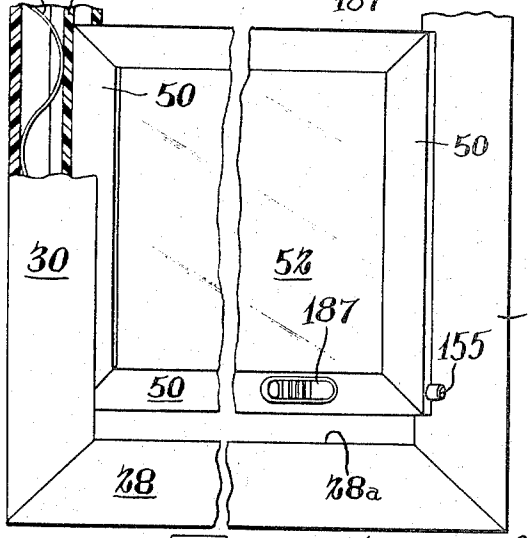

FIG. 13.

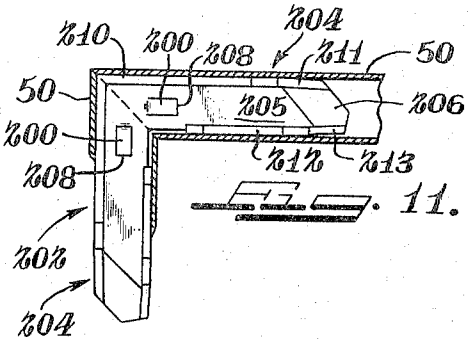

FIG. 11.

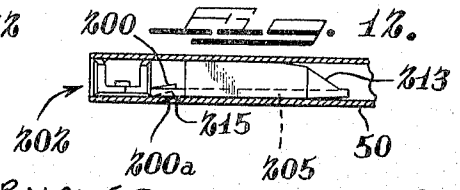

FIG. 12.

RALPH F. DONKIN, INVENTOR

BY Petherbridge, O'Neill & Anbel, ATTY'S

United States Patent Office 3,377,747 Patented Apr. 16, 1968

3,377,747

COMBINATION DOOR INSERT KIT

Ralph Flanders Donkin, Port Credit, Ontario, Canada, assignor to American Screen Products Company, Chatsworth, Ill., a corporation of Illinois

Filed Jan. 11, 1965, Ser. No. 424,522
2 Claims. (Cl. 49—414)

The present invention relates to combination door and window assemblies or kits, and more particularly to such assemblies including a frame and complementary window and screen panel parts, which frame, window and screen parts, when assembled, are adapted for mounting in a rectangular door opening either at the manufacturer level or at the site of existing installations in buildings, which may be equipped with such window and screen panel assemblies by simple modification to a minimum number of parts of the combination assembly kits.

Prior known assemblies for windows and screens installed in door openings, and the like, have required relatively careful tolerances in the shaping of the door opening to receive the assembled window and screen parts. While such installations can be accurately and conveniently made where factory installation facilities are available, such installations cannot be made so accurately or conveniently using the same type parts when the installation is to be made by a carpenter or a building owner in an existing door opening, or the like. Thus installations made in existing sites have not at all times been satisfactory from the standpoint of suitable weatherproof tightness of the window or screen frame within the opening, and the appearance of such installation is not attractive because of not being regularly aligned with other door parts.

This invention, to be described in detail below, comprises a frame assembly for factory installation, which is easily modified for field installation in doors and the like, and which permits portions of the same extrusion dies, therefore, to be economically used in large measure for manufacture of parts serving an identical function in both factory and custom installation.

Accordingly, a major feature of the present invention resides in overcoming certain prior art disadvantages, particularly of in situ installation, which are corrected with employment of the present invention by providing sufficient tolerances of parts for installation in door and window openings remote from a factory, while further providing for ready fabrication of parts for factory installation using a large portion of the same equipment for forming frame parts.

A structural feature of the present invention resides in a frame assembly constructed of extruded metal and/or plastic parts arranged to be assembled in a shape defining a rectangular opening and including an annular groove or track of predetermined depth facing said opening, at least one portion of the groove being equipped for receiving resilient retaining means to permit facile and quick installation and removal of prefabricated window and screen units.

Other material and functional features and advantages of the invention are as follows:

(1) The screen and glass panel frames preferably are made of roll-formed aluminum, which is readily treated by chemical conversion coating processes and can be painted by specially selected paint in several colors to attain eye appeal as well as corrosion resistance.

(2) The main frame assembly of the invention incorporates relatively rigid vinyl tracks and other specially selected materials to cope with changes of temperature as well as corrosion due to chemicals and smoke of industrial communities, as well as corrosion caused by the elements.

(3) Metallic portions of the invention which are exposed to weather to some extent are fabricated from corrosion resistant metals, such as stainless steel or the like.

(4) Certain of the parts are fabricated from natural virgin nylon for both eye appeal and blending with the coloration of other parts, as well as for strength inherent in such nylon.

(5) In both the factory fabricated and custom installations, the product is interchangeable and a durable and readily used and trouble-free product results therefor, and this feature is attained in large part by the functional feature that no metal-to-metal contact contributes to corrosion, that may be of galvanic nature in different atmospheres, and accordingly structural parts, such as lower door parts, are not stained by the effluent from such type corrosion.

(6) Grooves at the sides of the frame comprise long track legs for guiding the panels of an installation in use, and are interference fit for pressure sealing panels while permitting smooth controlled movement of the ventilating panel in the side tracks without a shearing action at the edges, and the interference fit also prevents rattling of the panels under windy conditions.

(7) In an alternate modification of the structure of the invention, for installation in situ, there is an in-built tolerance as well as provision for adapting the frame to different thicknesses of lumber, and the cut-out opening size may vary by approximately ½" either out of squareness or from minimum to maximum size of opening.

(8) The main frame assembly comprises extruded parts cut off in a manner to match at the corners and the corners can include welded mitre joints to reduce the possibility of leakage through the frame.

(9) The panels are readily placed in the frames and the frames may be either single or double-glazed, and are resiliently snapped into place semi-automatically by a spring biased track in one of the side rails or tracks.

(10) Glass panels can be reglazed in the panel frames by a new mitre joint connection which includes a staking tab that is resilent, which may be freed by insertion of a thin blade, such as a spatula, into the mitre joint and releasing the staking tab and removing the frame, and broken glass, for reassembly around a new plate of glass.

(11) By providing nylon lift handles for the ventilating panel of the combination kit, primary manufacturers of window parts may have their individual logogram cast in the handle on the top surface by inexpensive mold inserts for dies.

(12) The interlocking meeting rail may be conveniently acoustically welded in factory processing where acoustic projection welding equipment is available, and this further adds strength and weather tightness, and contributes to attractive appearance; and in addition the finished assembly in the field installations is arranged to present a smooth finish appearance by use of cover strips snapped over the installation screws used for making the installation.

Accordingly, it is a broad object of the invention to provide improved parts for assemblies of windows, screens, and the like.

A further object of the invention is to provide an improved frame for releasably retaining prefabricated screen and window panels.

A further object in keeping with the above objects is to provide frame part kits for combination doors, and the like.

A further object in keeping with each of the preceding objects is to provide an improved perimetrical frame for windows, screens, and the like, which incorporates yieldable portions providing securement for screen and/or window panels or assemblies therein.

An object in keeping with the next preceding object is

to provide spring retaining means for prefabricated window and/or screen articles of manufacture.

A further object in keeping with each of the preceding objects is to provide improvements in perimetrical window and/or screen frame for insertion into a frame in a rectangular opening.

A further object, in keeping with the preceding objects, is to provide frame parts for windows, screens, and the like, which are fabricated from extrusions which may be made from substantially identical extrusion die parts for adaptation of the frame to different end uses therefor.

A still further object is to provide a new combination corner bracket-latch for use with panels and the like.

The foregoing and other objects and advantages of the invention will be either pointed out or obvious in the following specification and claims as read in view of the accompanying drawings in which:

FIG. 1 is an inside elevational view of a door having a combination window and screen assembly inserted therein in keeping with this invention.

FIG. 2 is a sectional view taken on line 2—2 of FIG. 1.

FIG. 3 is a view similar to FIG. 2, but showing double glazing in the door.

FIG. 4 is a sectional view taken on line 4—4 of FIG. 1.

FIG. 5 is a corner detail of a lower right-hand corner of an assembly, with parts broken away for clarity.

FIG. 6 is a partial sectional view of a modification of the invention adapted for field installation.

FIG. 7 is a view similar to FIG. 6 showing some identical parts but having a wider spacer than that shown in FIG. 6 for accommodating door openings of thicker material.

FIG. 8 is a perspective view of a corner angle bracket for securing frame parts together.

FIG. 9 is a transverse sectional view showing interior structure of both frame and panel parts.

FIG. 10 is a detail view of a knob for actuating a latch or detent for a window panel.

FIG. 11 is an elevational view of a corner angle bracket for a screen or window panel.

FIG. 12 is a bottom view looking upwardly at FIG. 11.

FIG. 13 is a diagrammatic view of a frame with a window panel therein in position for removal from the frame; and

FIG. 14 is a view looking downwardly at FIG. 13.

Some of the principal attributes of this invention reside in facile installation and removal of window and screen panels, and the weather-tight, rattle-free character of assembly. The plastic frame and parts attenuate sounds even under strong, gusty wind conditions. A spring biased bolster in a side rail secures each window or screen panel in position, and serves to restrain movement of same in several senses of movement. The spring is readily depressed by hand pressure upon a panel engaging the bolster, thus facilitating insertion and removal of panels.

Referring now in detail to the drawings, and first to FIGS. 1 and 2, a door **20** of this invention is preferably a factory-fabricated door and has an opening therein, upper and lower edges **22** and **24** of which are shown in FIG. 2. Such factory-assembled doors **20** are assembled in jigs to careful tolerances and, accordingly, the surfaces **22** and **24** snugly engage an upper frame part **26** and a lower frame part **28**. Side rails **30** and **32** fit in like snug manner on surfaces **31** and **33**, FIG. 4, and the parts **26**, **28**, **30** and **32** can be preassembled with relationship with each other, and door parts can be placed therearound and positioned by a suitable jig, not shown. Nails **34**, at suitably spaced positions for proper rigidity of structure, can be placed around the frame parts **26**, **28**, **30** and **32** to secure same to the wooden parts of door **20**. Of course, if the door parts are metal, sheet metal screws of known kind can be used.

The frame parts **26**, **28**, **30** and **32** are all made preferably but not so limited, of relatively rigid vinyl extrusions to form stock in the shapes of the sections **26** and **28**, shown, and it is to be noted that these are identical, but inverted relatively. Side frame parts are made from identical stock. The stock has one or more grooves **35** which are inwardly flanged as by external flanges **36** and a septum flange **38** between flanges **36**. The innermost edges of the flanges **36** and **38** contain opposite facing ribs **40**, **42**, **44** and **46** which engage panel framing sides **50** of glass panels generally indicated at **52**, which panels **50** can be, and preferably are, identical to each other in major part. The invention also includes identically externally dimensioned framing sides **50'** for screen panels **54**, which are interchangeably fitted into doors or windows as desired.

The extruded stock also includes an exterior perimetrical flange including a flat base **60**, also common to the inwardly facing grooves **35**, and outwardly and inwardly extending edge flanges **62**. The edge flanges **62** are identical and adapted to frictionally fit sides **64** and **66** of the door **20**, which sides are inner and outer sides of a door in this example. The friction fit thus obtained is weather tight all around the parts **26**, **28**, **30** and **32** because of the rigidity of the vinyl material. Of course, for severe weather conditions, caulking can be applied at points **68** at tops and sides and bottoms; however, paint is usually sufficient to form an effective weather tight seal.

The vinyl material for the extrusion for forming the parts **26**, **28**, **30** and **32** preferably has a coefficient of expansion comparable for use with the wood to which it is applied in these prefabricated door units about the same as the coefficient of expansion of the wood. The woods which are normally used are pine or redwood or the like, although different factories use different techniques and different woods, and many doors are presently covered with vinyl or plywood on the exteriors only. It is within the scope of this invention to embrace such construction and adapt different vinyls with different coefficients of expansion to obtain a weather tight door under different ambient conditions.

As shown in FIGS. 1 and 5, a single extrusion for all of the sides **26**, **28**, **30** and **32** is best adapted for 45 degree mitre corners **70** at each corner of the frame structure. At these joints **70**, in factory installations, the vinyl is adaptable to welding by either heat or magnetic acoustical welding operations and, accordingly, the factory door assembly is weather-tight at each mitre corner **70**.

With reference again to FIG. 2, the side framing members **50** and **50'** for framing glass or screen panels are made of rolled aluminum stock. The members **50** comprise an upper wall **72** (with reference to the upper side **50**), a downwardly extending wall **74** which is inwardly return bent at **76** to form an inverted channel having a leg **76**. The channel **76** at its leg opposite the wall **74** terminates in an upwardly bent leg **78** secured, as by welding, to a second leg **80** downwardly extending from the upper side **72**. Window glass **82** is adapted to be secured in plastic U-cross-sectioned resilient stripping **84** which is inserted all around within the U-shaped inner channel **75**. The window glass **82** is frictionally retained therein and is sealed against the elements by the stripping **84**. The parts **50** forming top, bottom and side frame parts for a window frame are all identical and are mitre-joined at 45 degrees as indicated at mitre line **85**, FIGS. 5 and 9.

The screen panels **54** are framed in roll formed sides **50'**, also fabricated of rolled aluminum sheet or strip metal. With reference to FIG. 4, each frame side **50'** has an outer wall **90**. The wall **90** connects with a wall **92** in turn connected with a leg **94** of an internal U-shaped channel having a bottom leg **96** and an upstanding leg **98**, which latter leg **98** is secured by a bent-in leg **100** overlying the leg **98**. An outside wall **102** connects with a bottom wall **104** to complete the rolled frame stock. Screen cloth, cut to suitable size, has a substantially planar area **104** and is bent downwardly around its edges **106** and is preferably flared outwardly all around its perimeter

108. The screen is retained by snap-in friction bars 110 having mitred corners, not shown, for neat appearance. The bars can also be snapped out to replace screen in the event of damage to same.

The lower window panel 52, FIG. 2, on the bottom frame side 50, has a handle 112 that is preferably made of virgin transparent nylon for both strength and for blending into the coloration of the aluminum. The handle 112 has a recessed lower surface 114, a depending leg 115 which can receive two or more screws 116, which may be of the self-tapping type which pass through suitable holes, not shown, in the leg 115 and the exposed wall of the lower frame side 50. The nylon handle 112 is suitably cast and can contain a manufacturer's logogram as an embossment 118. To facilitate this, the casting dies may be provided with different inserts custom made to suit quantity purchasers' desires in this regard.

The lower inner window 52 is equipped on its top frame side with an extruded plastic interlock strip generally indicated at 120. The interlock strip 120 cooperates with an outer interlock strip 122 carried on the bottom side 50 of the outer and upper window panel 52. Each of the interlock strips 120 and 122 may extend entirely between inner surfaces 124 and 126, FIG. 5, of the side rail frame parts 30 and 32; or clearance at one end can be provided to facilitate ready panel placement and removal. The interlock 120 has a downwardly depending edge 128 and the interlock 122 has a mating edge 130 which underlaps the edge 128, with panel parts in the position shown in FIGS. 2 and 3. The interlock 120 is secured by a suitable number of screws 132 to the top wall 72 of the upper window frame part 50 of the lowermost window panel 52 and the outer interlock 122 is secured by identical screws 132 to the wall 72 of the lower frame part 50 of the uppermost window panel 52. The interlock 120 is preferably snap fitted as a cover over the top wall 72 in a manner now to be described.

The interlock 120 is shaped generally as an inverted U-shaped strip and the spread between the depending legs of the U-shaped strip are such as to have an interference, or friction, fit with the sides of the upper window frame part 50. Overlying the upper wall 72 of the frame part 50 is a plastic strip 135 which is secured down upon the wall 72 by a suitable number of the screws 132. The strip 135 extends along the upper surface of the wall 72, preferably nearly the entire length thereof. The strip 135 is sized to be a snap fit with relationship to the interior of the U-shaped portion of the interlock 120. By such construction, the interlock strip 120 can be inserted between the side rail framing parts 30 and 32 and be snapped on and off to and from the position shown, FIG. 2, after the window assembly is made, while leaving the securement strip 135 in place. It is to be noted that the securement strip is of a dimension approximately the same as the width between the inwardly facing beads 40 and 42 forming the inwardly facing opening of the slotted side rails, and therefore, the securement strip can slip into same for facilitating insertion and removal of window panels 52. The operation of inserting and removing panels will be described more fully hereinbelow.

The different combination glass and screen panels 52 and 54 as assembled are retained in the grooves 35 around the frame parts 26, 28, 30 and 32 by the following structure. A pair of identical inverted U-shaped channel beams 140 are inserted in the lower channels 28. The depending legs 142 of channel beams 140 space the top surface 144 thereof a predetermined distance above the upper surface of the wall 60 of the rail 28 to permit the lower window panel framing members 50 to enter the lower grooves 35 only a certain distance. The groove 35 extends entirely around the framing members inasmuch as they are formed of identical extruded stock. It is to be noted that the upper framing member 26 does not have any spacer in it for a purpose to appear more fully hereinbelow.

With reference to FIGS. 4 and 9, it is to be noted that the side rails 30 and 32 are equipped with, respectively, a U-shaped bolster 145 having less depth than a spacer 140*a*, which latter may be made of identical stock as the spacers 140 described above. Both bolsters 145, FIG. 4, are identical to each other in cross-section and made from identical extruded stock. The bolsters 145 have short legs 146 so that the bolsters 145 can both be moved bodily toward the left from the position shown in each of FIGS. 4 and 9. Identical serpentine shaped elongated springs 148 are framed between inner surfaces 150 of the side channels 35 and an inner wall 152 of the spacers 145.

In the position shown in FIGS. 4 and 9, the springs 148 are under compression at all times. Rightward movement of springs 148 is restricted by engagement of the bolsters 145 with the inside surfaces 30*a* and 30*b* when a window or screen panel is not inserted into the continuous channels 35. As will appear more fully hereinbelow, a window or screen panel can be moved toward the left, as viewed in either of these figures, to compress the serpentine springs 148 to permit insertion and removal of window and screen panels 52 and 54, respectively. The U-shaped channels 140*a* and 145 preferably extend down to the tops 144 of the bottom insert channels 140; and there is sufficient clearance provided in the top rail 26, for both the movable bolster 145 and the serpentine spring 148 to permit lateral movement thereof for receiving and retaining glass panels 50 and screen panels 50'.

As shown in FIGS. 5 and 9, the insert channel 140*a* is provided with one or more, and preferably at least two, holes 154 into which a bolt 155 may be spring biased for locking the window panel 50 is closed or suitably open positions. In each figure the window panel 50 is shown in the closed or lowermost position. Because of this locking function attribute of the present invention, it is preferred that the guide insert 140*a* be the entire length of the right-hand rail 32, or alternatively, of the left-hand rail 30 of the frame structure.

A combination corner bracket and latch mechanism 160 also comprises an important feature of this invention. With reference to FIGS. 4, 5, 9 and 10, details of this latch mechanism 160 are shown. A corner angle bracket 161 may be formed of suitable material for stamping and forming, and comprises an upstanding leg 162 having outwardly turned flanges 164, which leg 162 and flanges 164 are sized for friction fitting into the interior end opening of window framing stock 50. With reference to FIG. 2, it is to be noted that a similar interior end opening is provided in the screen framing stock 50'. Accordingly, the same corner brackets can be used with screen panels 54 as with window panels 52 and fitting framing parts 50' and 50. At right angles to the leg 162, and the upstanding flanges 164, is a second leg 166 having an upstanding flange 168, which together with the leg 166 fits the interior of framing stock forming the bottom frame part 50 for the window panel 52.

The leg 166 has an upstanding end flange 170 which is adapted to abut at one end of a spring 172, which is a compression spring. The other end of the compression spring 172 is adapted to snap fit over a boss 174 of the plunger generally indicated at 175, which plunger 175 is preferably formed of nylon both for strength and to facilitate a smoothly sliding structure in metal and plastic parts in which it is confined.

The plunger 175 is provided with a generally rectangularly cross-sectioned barrel 176 which has an axially slotted cross-hole 178 therein for frictionally engaging a neck 180 having a snap-in head 180*a*, which neck is formed with an external extension 182 of a handle 185, FIG. 10. The extension 182 extends through a slot 186 in the window framing member 50, partially shown in FIG. 10. The slot 186 has suitable length to permit movement of the barrel 176 toward the left against the bias of spring 172, when transverse force is applied to knob 187, to draw the bolt 155 out of engagement in any hole 154 to

free the window panel **52** for movement away from the position shown and into retention in another hole **154**. The barrel **176** contains projections **188** which slide along a raised web **189** to keep the barrel **176** in alignment.

The bolt **155** passes through a notch **192**, which is open outwardly from the plane of the paper, so that the assembly of the plunger **175** within the bracket is merely a matter of placing same in the position shown, FIGS. 4 and 9, upon assembly of the framing parts **50** with the bracket **160**. The bolt **155** can be drawn within the inside of the outer dimensions of the bracket **160** whereby to facilitate slip-on assembly of framing parts **50** over bracket legs **162** and **166**.

The snap together feature of the knob **185** with the barrel **175** for rendering the latch **165** operable exteriorly of the frame part **50** forms an important attribute of this invention. The window panels, and screen panels on which latches are desired, can be shipped packaged in relatively flat packages, and the knobs **185** can be snapped into place after the package is opened. Accordingly hitherto wasted package space is saved by this new snap together feature of the present invention. Once parts **175** and **185** are snapped together, by exerting force between the knob **187** and the wall **50** of the window frame, the end **180***a* can be snapped out of the slot **178** for convenient disassembly of same. Because the parts are made of virgin nylon, both for strength and beauty, they can be snapped together and taken apart several times without injury to either part.

As will appear more clearly below, the frame members **50** framing window panels **52**, as well as screen panels **54**, are adapted to be snapped together by a new corner bracket structure including two tabs **200**, only one of which appears in FIG. 9 in the bolt-and-bracket combination, the other being hidden beneath the plunger **175**.

The new corner bracket assembly now will be described with reference to FIGS. 9, 11 and 12. Corner brackets **202** are provided with tabs **200** that can be formed in the same punching machine as the tabs **200** of the bracket-latch combination explained hereinabove.

Each corner bracket **202** is identical to another, and comprises two identical legs **204**, only one of which will be described in detail. The brackets are such that they can be conveniently made from sheet metal parts; however, they can be cast, or otherwise suitably manufactured, in keeping with this invention.

A leg **205** has a canted-up end **206**. There is a struck-up tab **200** which provides a shoulder **208**. The leg **205** has an external struck-up flange **210**, and an internal struck-up flange **212**, the ends **211** and **213** of which, respectively, taper to afford facile assembly. The dimension of at least one of these flanges, and preferably both flange **210** and flange **212**, is sufficient to engage slip-frictionally the internal walls of each of rail framing sides **50** and **50'**. A side **50**, adjacent the end thereof, has a struck-up flange **200***a* which presents an end **215** adapted to engage the shoulder **208** to latch a framing part **50** in position upon a leg **205**. A left-hand end of window framing stock **50**, mitred at 45 degrees, is adapted to slide on the left-hand leg **204** into abutting engagement along the mitred corner lines **85** and likewise frictionally engage a shoulder **208** of the leg **204** whereby to latch the assembly together at each corner.

In assembling a panel with framing parts **50** in keeping with this invention, and including either a latch bracket structure **160**, or four-corner brackets **202** of the type described immediately above, the following steps of assembly are taken. A lower horizontal frame part **50**, FIG. 9, has at its left-hand side a leg **204** inserted into the end thereof until the tabs **200** and **200***a* engage each other, which in this invention is accompanied with a clicking sound as tab surfaces snap into engagement. Either another similar bracket **202**, or the latch bracket **160**, can next be inserted in the right-hand end of the lower rail **50** until a latch tab **200** and **200***a*, not shown, engage. Thereafter, side framing vertical members **50** are pushed down on the upstanding legs of the brackets **160** and **202** until the tabs **200** engage the tabs **200***a* with the mitred corners **85** in engagement with each other. Thereafter an upper horizontal framing rail, not shown, has brackets inserted thereinto in the same manner as discussed in connection with the insertion of brackets into the lower window framing rail **50**. With the brackets inserted into the upper rail the same is moved simultaneously into both the right- and left-hand window frame parts **50** until tabs **200** and **200***a* snap together which completes the assembly of the frame parts **50**.

It is to be noted that screen panel frame parts **50'** can be assembled in the manner outlined above inasmuch as the screen, FIGS. 2 and 4, is held in place by snap-in keeper bars **110** around the periphery of the screen cloth **104**.

For glass window panel assembly, after the bottom and side frame parts **50** are assembled, window supporting gasket or gaskets **84**, at least the bottom three sides of which may be a single strip, are inserted in the inward facing U-shaped groove formed in the frame parts **50**. Thereafter, or simultaneously therewith, the glass panel **52** is inserted therein in the strip. A similar strip **84** is inserted into the horizontal top frame piece **50**, not shown, with brackets **202** therein, and the same is placed down into the tops of vertical side frame parts **50** and over the top of the glass until fastening tabs **200** and **200***a* engage each other to complete a window panel assembly.

In order to disassemble a glass panel **52**, a spatula or knife blade or the like can be inserted at the junction mitre line **85** between ends of frame parts **50** and the spatula is passed inwardly between the inside wall **50** of the framing part and the bottom surface of leg **205** of the angle bracket **202** or **204** to depress the tab **200***a* out of engagement with the shoulder **208**. The rail's corner can be pulled apart, at least sufficiently to maintain release of the tab **200***a*. Thereafter, a tab **200***a* on an opposite corner is likewise released from retention with the shoulder **208** and the frame rail thus released can be separated. Accordingly, it is seen that an additional attribute of the present invention is facile replacement of broken window panes and the like.

The above described modification of the invention has been directed to a preferred form of construction, that is, the factory-assembled combination door kit for a door unit. With the parts manufactured and used in the manner above described, kits of parts can be made up for large purchasers of doors at remote points of the market and units comprising all of the parts comprising a kit for a single door can be contained in a single package. Window and screen framing parts can be assembled at a remote factory or shop making finished doors including the kits as part of the doors; and can assemble a door including framing structure in the manner now to be described.

By way of example only, with reference again to FIG. 1, the door **20** may comprise substantially four or more parts. It is to be understood, however, that different manufacturers may choose to use any desired number of parts, as mentioned briefly above in the introduction to the specification. As constructed of four parts, a lower part **220** can be joined at its side by two vertical side parts **222** along lines **224**, which lines **224** can be spaced precisely to match the dimensions and closely fit the frame parts **28**, **30** and **32**. The lower rail or track **228**, without the inverted U channel member **140** therein is placed over the part **220** (with at least one side part **222** not assembled) and nailed down, as by nails **24**. After nailing the channel member **140** is inserted. Thereafter either the right or left track **30** or **32** can be installed.

The track **30** can be installed next, and nailed to the left side **222**. In the event it is desired to have the bolster **145** on the left-hand side (which is usually the case) the less deep inverted U-shaped channel forming the bolster **145** and the spring **148**, FIG. 9, is slipped down into place

as shown in FIG. 9. Thereafter, the right-hand rail **32** is nailed to the right side **222** of the door **20** with the chamfered corners **70** engaging each other. The inverted U-shaped channel **140***a* is slipped down within the groove **35** in the rail **32**. Thereafter the inverted top rail **26** is installed on the top piece **226**, which together form a subassembly and are connected with the side pieces **222** of the door **20**.

The adaptation of the invention for field or custom installation will now be described. Parts that are identical to parts described hereinabove bear the same reference characters, and will not be described again. With reference to FIGS. 6, 7 and 8, certain parts that are used in connection with a completed door construction now to be described, are not shown for clarity of the modified parts. It is to be understood, however, that identical parts, particularly the window and screen panel parts, are identical to those described above as well as the corner latch and the brackets. Likewise the buffer **145** biased by the spring **148** is used in each of these modifications and will not again be described.

With reference first to FIG. 6, a framing structure has identical parts forming tracks or channels **235** to the grooves **35** described above, and can be fabricated from the same or identical die parts. This modification, however, has an enlarged adapter for openings in doors and the like so that the same may be installed in situ in the field. These modifications of the invention have the characteristic, in common with the preferred embodiment of the invention described above, in that they use identical extrusion shapes in large part to form all four sides of the framing rails of a rectangular opening.

With reference to FIG. 6, part **230** of an extrusion is shown in typical cross-section for all four sides of an opening **232**. Such parts **230** are used for connecting a combination kit in the opening **232** in a door part **234**, and include an offset leg **236**, depending leg **238**, and an inwardly facing shoulder **240** providing a surface **242** for abutting a left-hand surface of the door **234**, as illustrated, and preferably the outdoor surface of the door for weather tightness all around. A plurality of nails **244** are nailed in a longitudinally extending groove **246**, and a suitable number of nails **244** are used to obtain a desired securement of the rail or track containing grooves **35** to the door opening **232**.

It is to be noted that a dimension *d* can be accommodated with this structure. This dimension *d*, in a presently made modification of the invention can be approximately ¼", whereby to accommodate ½" of either out of plumbness or trueness, or minimum to maximum dimension accommodated by a kit having parts constructed with such quarter inch clearance all around. The extrusions are mitred at 45 degrees at their corners, not shown, but in the manner of the previously described modification of the invention, and a cover strip **248** can be snapped in place inside the groove **246**. The cover strip **248** in the groove **246** is also mitred at corners thereof to present a smooth appearance of the installation.

In order to accomplish secure and weather-tight corner sealing of this modification of the invention, a corner bracket such as illustrated in FIG. 8 is used. The corner bracket **250** is made up of extruded angle-shaped plastic stock preferably of the same material as the other extrusions. The angle-shaped stock is cross-cut off along cut-off lines **252, 253**, etc., to have a proper width **254** to press fit tightly between shouldered flanges **255** in each of the extruded parts when connected together at their corners. It is to be noted that legs **256** of the corner brackets **250** are identical, and when fitted between the shouldered flanges **255**, provide rigidity at the corners and weather tightness thereof.

In assembly, in one method, brackets **250** are inserted in the manner of assembly of the rail parts described hereinabove and the bottom rail is preferably inserted first and rendered level with respect to gravity whereafter the balance of the assembly can be made. Another alternate method of assembly of the portion of the invention thus far described comprises assembly of all four frame sides, which as assembled are moved toward the right into the door opening as viewed in FIG. 6, plumbed with the aid of wedges, not shown, and the nails **244** placed therearound. Either method of assembly is recommended; however, the latter method of assembly, further including the window and screen panels therein is likewise a convenient method for the less skilled installers inasmuch as they can better plumb up the entire assembly with a level while accommodating irregularities in the opening **232** made in a door. The assembled screen and window panel parts will avail further rigidity while the corner lock brackets **250** will maintain the assembly in suitably fixed relationship to accomplish assembly of the left-hand portions **230** of an in situ installation.

With the left-hand portions **230** all in place, the right-hand portion **260** can be snapped in along an inwardly projecting bead on an upper edge **262** of the portion **260** into a female bead **264** on the portion **230**. After snapping the bead parts **262** and **264** together, a bottom grooved base **266** can be nailed by nails **244** in the manner described in connection with the part **230**, and an identical snap cover **246** can cover the nail heads.

The modification shown in FIG. 7 is generally identical to the modification described in connection with FIG. 6, and all parts are the same with the exception that bead **262***a* cooperating with the bead **264** is carried by an inwardly extending wider flange **270** which accommodates a wider piece of stock **272** for a door. It will be recognized that for different widths of door stock, which may vary widely in different parts of the world, that identical extrusions **230** can be utilized while providing modified parts **260***a*. This attribute of the invention effects a substantial saving in dies and permits the making of higher quality dies for forming parts that are common to each modification of the invention described above.

One method of removal and installation of screen and window panels will now be described. With reference to FIGS. 13 and 14, the interlock strip **120**, FIG. 2, is first snapped off and the lower inner glass panel **52** is raised. Removal of the strip **120** exposes the snap-in strip **135** on top of the top framing piece **50** for the window **52**. To facilitate removal of the locking strip **135** the lower window panel **52** can be raised so that the interlocking lips **128** and **130** are free to permit ready removal of the strip **120**. By placing a putty knife under the exposed edge of an end of the inverted U-shaped strip **120** the same can be snapped up and off of the snap-in strip **135**, the locking strip **135** end can be raised up further to peel the same off of the snap-in strip **135**. With the panel **52** thus raised, pressure can be placed upon the right-hand frame part **50** to move the panel **52** toward the left against the bolster **145** against the bias of the serpentine spring **148** to thus move the bolster **145** toward the left. The bolt **155**, shown extended, is retracted toward the left by moving the knob **187** leftward. As most clearly shown in FIG. 14, the right-hand panel **52** can then be rotated inwardly and out of alignment with the side rail **32**, and thereafter moved toward the right to remove the left-hand side thereof from the side rail **30**.

With the lower window panel **52** thus removed, screen panel **54** can be moved upwardly which in turn will drive the upper and outer window panel **52** upwardly into the space **35** in the top rail **26**, FIG. 2. The upper rail **50** of the upper window panel **52** can be pushed up as far as the dotted line position **50***a*. With the upper window panel **52** in this uppermost position, the screen panel **54** can be moved downwardly to free the upper rail **50'** thereof from the lower channel of the locking strip **122**. In this latter position the screen panel will be out of the groove in the lower or sill rail **28** and can be swung in the same manner as the window panel **52** described above to clear

same from the right-side rail **32** to permit removal of the screen panel **54** from the left-hand rail **30**.

If the outer and upper window panel **52** is to be removed, the locking strip **122** is removed by removal of screws **132**. As a general rule, in most localities, the upper and outer window panel **52** is left in place at all times. With the screen panel **54** removed, the upper panel can be washed in situ conveniently by moving same up and down in the side rails **30** and **32** to convenient positions for washing from inside of a building. In the event of glass breakage, and removal is desired, the locking strip **122** can be removed, the panel removed and a glass pane replaced, as described briefly above.

With reference to FIG. 3 a window arrangement is shown for winter usage and is double glazed, as is common in many Northern and Southern Hemisphere locations. This arrangement comprises four glass panels **52**. With such installation it is to be noted that a locking strip **122** is also provided for the inner windows; however, this strip may conveniently be a snap-on strip, not shown, rather than a screw-on strip as shown, if desired. In this modification of the invention, it is preferred that ventilation holes **28'** be provided in the lower window framing part **28** as illustrated in FIG. 9. As shown in FIG. 3, these holes pass through all parts except the innermost web **36** of the bottom rail **28**. A screen **36'** is preferably placed immediately within the outermost web **36** and outside the inverted channel insert leg **142** to prevent insects from nesting within the framing structure.

To accomplish removal of the inner panels, shown at the left in FIG. 3, the lower panel **52** is raised, which drives the upper panel **52** up to the dotted line position **50***b*. The lower panel can then be moved downwardly to the position shown in solid lines, FIG. 3, to leave a space between lower framing rail **50** of the upper window panel and the locking strip **120**. With the locking strip **122** removed, as by removal of the screws **132**, the lower window panel **52** can again be raised and removed in the manner illustrated in FIGS. 13 and 14.

The next step of removal is to raise the outer two window panels **52** driving the upper rail **50** of the uppermost window thereof to the position **50***a* in the same manner as described above in connection with FIG. 2. With the upper rail **50** in this uppermost position the lower window panel **52** can be lowered to clear the bottom channel in the locking strip **122** and be removed in the manner of removal of the screen panel **54**, FIGS. 13 and 14.

After removal of the lower outer window panel **52**, the upper inner and outer window panels can be removed by moving both upper window panels **52** downwardly simultaneously, or moving at least the inner window panel downwardly in the event the interlock strip **122** is removed, and swinging the upper and inner window panel **52** outwardly in the manner of removal of the window panel **52**, FIGS. 2, 13 and 14.

If it is desired to remove the outer upper window panel **52**, the same can be removed in the same manner as described in connection with FIG. 2 by removal of the outer interlock strip **122**, moving the window panel downwardly and compressing the bolster **145** and the serpentine spring **148** to effect removal in the manner described above.

While I have shown and described in detail a preferred embodiment of my invention and subcombinations thereof, and modifications of the invention, obviously other combinations, subcombinations and methods of using apparatus and window kits in keeping with the teachings of the invention will occur to others skilled in the art. Accordingly, I wish not to be limited in my invention only to the specific embodiments shown and described, but only by the spirit and scope of the following claims.

What is claimed is:

1. A multi-panel window construction comprising a frame formed from segments of a single extrusion for retaining movable and removable window panels, the frame having a base defining an inner peripheral rectangular opening and having a predetermined thickness, the frame having a rectangular configuration with the outer periphery thereof being sized to fit a predetermined opening, said frame base including upper, lower and side parts, the extremities of each of the frame parts being mitered to engage adjacent parts to provide the frame with mitered corners, each of the upper, lower and side frame parts being formed with flanges directed inwardly from the base and providing therebetween a pair of adjacent inwardly opening U-shaped channels, the abutment of the bases of the frame parts providing a pair of adjacent continuous channels which open inwardly from the continuous bases into the opening provided by the inner periphery of the frame and which channels extend in a generally rectangular pattern about the inner periphery of the frame, the inwardly directed flanges being disposed in a direction substantially normal to the respective frame part bases from which they extend, the innermost extremities of each of the flanges being flanged to partially close the inwardly opening U-shaped channels to retain spacer members therein, first elongated spacer members disposed longitudinally in the channels of the lower frame part and in contact with the base thereof, a second elongated spacer member disposed vertically in one of the side frame parts, the second spacer member being provided with a plurality of generally vertically aligned and spaced perforations for receipt of window locking means, and resiliently biased third spacer members disposed vertically in the side frame part opposite the second spacer member.

2. The multi-panel window construction of claim **1** including a plurality of movable and removable window units, each having at least three peripheral edges thereof movably disposed within channels of at least three of the frame parts, the fourth peripheral edges of the windows being disposed in normally adjacent relationship at about the midpoint of the rectangular frame, at least one of the window units being provided with locking means cooperable with the perforations on the second spacer member to permit selective vertical positioning of the window in the frame.

References Cited

UNITED STATES PATENTS

2,605,870	8/1952	Hansen	49—414
2,664,599	1/1954	Zitomer	49—414
2,917,788	12/1959	Kunkel	49—434
3,130,455	4/1964	Borlenghi	52—309
3,003,202	10/1961	Mendelsohn	49—450 X

DAVID J. WILLIAMOWSKY, *Primary Examiner.*

HARRISON R. MOSELEY, *Examiner.*

A. I. BREIER, J. KARL BELL, *Assistant Examiners.*