No. 822,881. PATENTED JUNE 5, 1906.

C. E. BROWN.

ELECTRICAL PIANO PLAYING MECHANISM.

APPLICATION FILED JUNE 5, 1905.

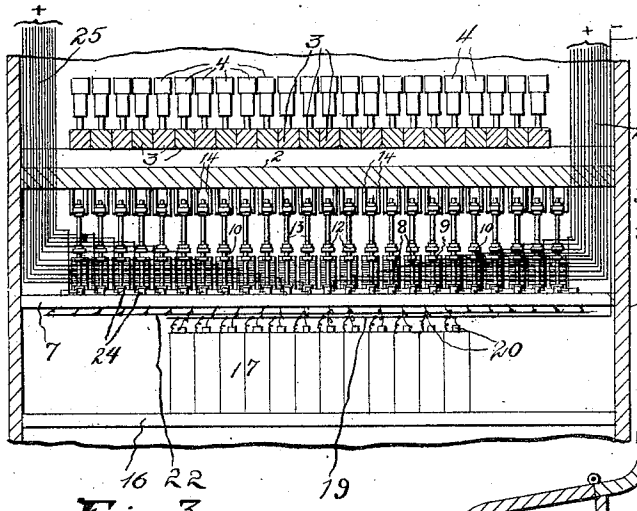

Fig 3

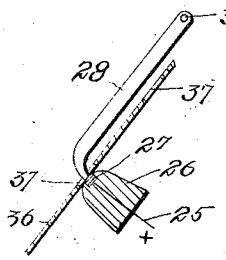

Fig. 4.

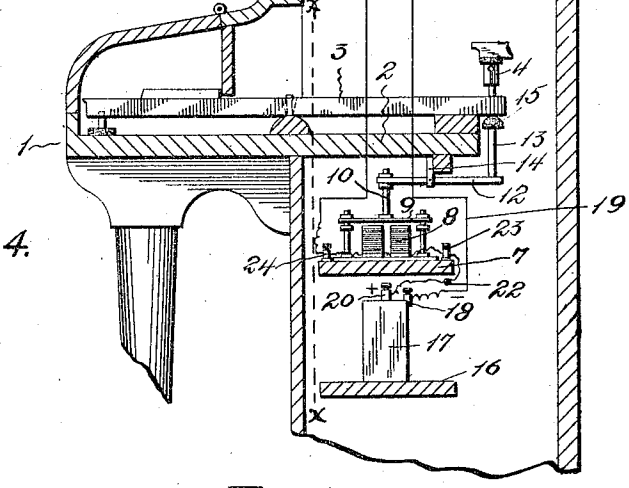

Fig. 1.

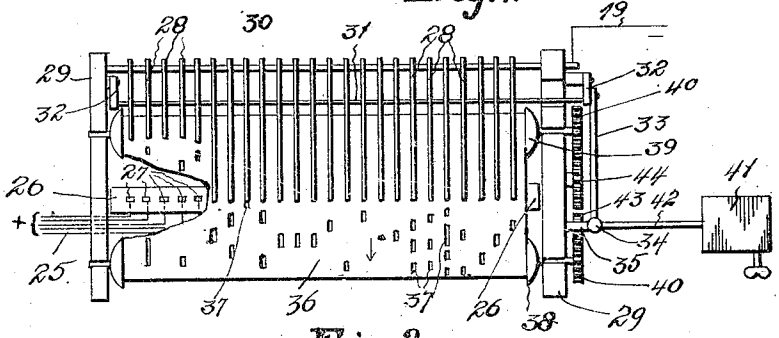

Fig. 2.

WITNESSES:

Carl Stoughton

INVENTOR

Carl E. Brown

BY Shepherd & Parsons

ATTORNEYS

BEST AVAILABLE COPY

UNITED STATES PATENT OFFICE.

CARL E. BROWN, OF COLUMBUS, OHIO.

ELECTRICAL PIANO-PLAYING MECHANISM.

No. 822,881. Specification of Letters Patent. Patented June 5, 1906.

Application filed June 5, 1905. Serial No. 263,789.

To all whom it may concern:

Be it known that I, CARL E. BROWN, a citizen of the United States, residing at Columbus, in the county of Franklin and State of Ohio, have invented certain new and useful Improvements in Electrical Piano-Playing Mechanism, of which the following is a specification.

My invention relates to a new and useful improvement in piano-playing mechanisms, and more particularly to an electrically-operated piano-playing mechanism.

The object of the invention is to provide an electrically-operated piano-player of simple construction.

Another object of the invention is to provide a mechanism of the character described that will be simple, durable, and efficient and one in which the several parts will not be liable to get out of working order.

With the above and other objects in view the invention consists of the novel details of construction and operation, a preferable embodiment of which is described in the specification and illustrated in the accompanying drawings, wherein—

Figure 1 is a partial transverse vertical sectional view of an ordinary piano, showing my mechanism applied thereto. Fig. 2 is a plan view of the music-sheet and operating mechanism and the circuit-closing fingers. Fig. 3 is a partial longitudinal vertical sectional view of the lower portion of the piano, showing the batteries and electromagnets in elevation; and Fig. 4 is a transverse sectional view through the tracker-board and a portion of the music-sheet, showing one of the circuit-closing fingers in side elevation.

In the drawings the numeral 1 designates an ordinary piano-casing, and the numeral 2 the usual key-bottom on which are fulcrumed the keys 3, it being understood that the number of keys will depend upon the style of piano employed. At their rear ends the keys carry the usual capstans 4 or other piano-action-operating devices. Of course it is to be understood that the pianoforte and action may be of any approved construction and therefore has not been illustrated in detail, a single string 5 and hammer 6 being shown.

I will first describe the electromagnetic mechanism for operating the keys 3, which is as follows: A shelf 7, located within the piano-casing below the key-bottom 2, supports a plurality of suitable electromagnets 8, one being provided for each key and located directly therebeneath. On each armature 9 of the magnets I dispose a vertical post 10, connected at its upper end to a lever 12, carrying on its outer end a vertical pin 13, as clearly illustrated in Fig. 1. The levers 12 are pivoted nearer their forward ends between brackets 14, extending downwardly from the key-bottom 2. By this construction the portions of the levers extending rearwardly, together with the pins 13, will have a greater weight than the combined weight of the forward portions of the levers, the post 10 and the armatures 9 thus normally holding the armatures elevated and out of contact with the magnets 8. The pins 13 each carry at their upper ends enlarged cushioned heads 15, which contact with the bottoms of the keys 3 at their rear ends, the keys resting in their usual position, so that they may be manipulated without interference from the pins and their heads. When the circuit is closed through any one of the electromagnets, the armature 9 thereof will be drawn down, thus raising the pin 13 on the lever 12, which in turn pushes the rear end of the key 3 upward, thus operating the piano-action in the usual manner, the parts returning to their normal positions when the circuit is opened or broken

For operating the magnets and closing the circuit, &c., I arrange some distance below the shelf 7 a second shelf 16, on which I arrange a suitable number of batteries 17. It might be here stated that while I have shown batteries or dry cells 17 any suitable electric generating device or devices may be employed. By referring to Fig. 3 it will be noted that the negative poles 18 of the batteries are connected to a common wire or conductor 19, while the positive poles 20 are connected to a common wire or conductor 22. One of the binding-posts 23 of each of the electromagnets 8 is connected to the common conductor 22, while from each of the other binding-posts 24 of the magnets a wire 25 is carried upward to a tracker-board 26. Each of the wires 25 is passed through the tracker-board and attached to a metallic contact button or plate 27, mounted on the upper surface of the said board, it of course being understood that there is a button 27 for each wire 25, and thus each magnet 8 and key 3. The tracker-board 26 is preferably formed of wood or any other suitable non-conducting material, thus allowing the buttons 27, which are spaced apart, to be insulated from each other. The common conducting-wire 19 is

carried up through the piano-casing and connected at its upper end to a metallic shaft 30, mounted in supports 29 at each end. Fixed on the shaft 30 are a plurality of circuit-closing fingers 28, preferably formed of metal, having downturned ends and spaced apart, so that each of the said ends will rest on one of the buttons 27 and when in such position close the circuit through the magnets 8. For raising the fingers out of contact with the buttons 27 to facilitate the removal and insertion of the music-sheet I extend a rod 31 immediately beneath the fingers and supported at each end in swinging arms 32, pivotally arranged on the supports 29. To one of the swinging arms 32 I pivotally attach the end of a link 33, which is pivotally connected at its opposite end to the lower end of a hand-lever 34, pivotally supported at 35, as indicated in Fig. 1. By referring to Fig. 1 it will be apparent that when the hand-lever 34 is swung downward in the direction of the arrow its lower end will be swung upward, causing the link 33 to move upward, which in turn swings the arm 32 and the rod 31 upward, the latter contacting with the fingers 28, raising them above the contact-buttons 27. The ends of the fingers are raised far enough to allow the music-sheet 36 to be freely passed thereunder, and thus removed and inserted.

The music-sheet 36 is of the usual construction and provided with the ordinary perforations 37, through which the ends of the fingers will drop and contact with the buttons 27. The music-rolls 38 and 39 are suitably supported in the supports 29 on each side of the tracker-board and have their shafts extended at one end, so as to receive pinions 40, by which they are driven, it being understood that the music is wound from one roll onto the other and then rewound back on the first roll, as is the usual custom. For imparting motion to the music-rolls I employ a suitable motor 41, preferably a spring-motor. The motor 41 is provided with an elongated drive-shaft 42, which owing to its length is capable of a limited lateral movement at its outer end, at which point it carries a driving-pinion 43. The driving-pinion is normally held in contact with the pinion 40 of the music-roll 38, on which the music is wound during the playing. A transmitting or reversing gear 44 is mounted on the opposite side of the driving-pinion 43 in close proximity thereto, but out of contact therewith. This gear 44 meshes with the gear 40 of the music-roll 39. From this it will be apparent that upon the motor 41 being set in operation motion will be transmitted by the driving-pinion 43 to the pinion 40 of the roll 38 and the music-sheet wound upon the same from the roll 39, which is free to turn. When the piece has been played and it is desired to rewind the music onto the roll 39, the hand-lever 32, through which the shaft 42 passes below the pivot-point 35, is pulled downward in the direction of the arrow shown in Fig. 1. This movement of the hand-lever will spring the shaft 42 out of contact with the pinion 40 into mesh with the transmitting or reversing gear 44, which will transmit motion to the pinion 40 of the roll 39. The roll 39 is thus caused to rotate in an opposite direction from the direction of rotation of the roll 38, and thereby wind the sheet of music from the said roll.

Having described the construction and the operation of the several parts, I will now set forth the complete operation of my mechanism. The hand-lever 34, having been forced downward in the direction of the arrow shown in Fig. 1 simultaneously swings the rods 31 upward, thus elevating the ends of the fingers 28 and springs the shaft 42, so as to throw the driving-pinion 43 into engagement with the reversing-gear 44. The roll 38 being mounted in the supports 29 always remains in position. The roll 39, containing the sheet of music, is now placed in the supports, the fingers 28 having been raised high enough to allow its ready insertion. The free end of the sheet 36 is now drawn across the tracker-board 26 in the usual manner and suitably connected to the roll 38. The music-sheet having been placed in position, the hand-lever 34 is swung upward, pulling the link 33 downward, thus lowering the fingers 28 and allowing their curved ends to rest on the music-sheet and also throwing the driving-pinion 43 into mesh with the pinion 40 of the roll 38. The motor 41 is set in operation and motion transmitted to the roll 38, which begins to wind the music-sheet, drawing the same across the tracker-board, so that the perforations 37 pass over the buttons 27. The fingers 28 rest on the paper, which being a non-conductor, separates them or holds them out of contact with the said buttons, thus keeping the respective circuits broken or open until one of the perforations 37 passes under one of the fingers 28, when the end of the same will drop through the perforation and contact with the button 27 thus exposed. This will cause the circuit to be closed through the magnet 8 with which the button is connected and the armature 9 of the magnet drawn down, thus causing the pin 13 on the end of the lever 12 to be swung upward and the end of the proper key 3 raised, so as to operate the piano-action and strike the correct note. The note is held and the key maintained in its raised position until the end of the perforation 37 is encountered by the finger, which will ride out of the same, thereby being raised out of contact with the button 27 and the circuit broken or opened, thus leaving the parts free to assume their normal positions. In this manner several keys are operated and the correct notes

sounded at the proper time. The playing of the piece having been completed, the hand-lever 34 is forced downward, so as to throw the driving-pinion 43 into mesh with the reversing-gear 44 to transmit motion to the roll 39 for rewinding the sheet and simultaneously elevating the fingers 28.

Attention is called to the fact that it is not necessary to have the music-sheet as it passes over the tracker-board taut, although it must bear on the tracker-board with sufficient pressure to prevent wrinkling. However, it need not be stretched or caused to bear on the tracker-board with such great pressure as is necessary in pneumatically-operated devices where any looseness of the sheet causes a leakage of air, thereby effecting the perfect operation of the device. This stretching or tautness of the sheet causes a great amount of wear and tear and the music-sheet soon loses its efficiency.

Having now fully described my invention, what I claim, and desire to secure by Letters Patent, is—

1. In an electrical piano-playing mechanism, a plurality of electromagnets, a tracker-board having electrical contact-points, a perforated music-sheet arranged to travel across the tracker-board, a plurality of circuit-closing devices arranged so as to rest at one end on the music-sheet in the path of the perforations and to close the circuit by engagement with the contact-points, rollers for supporting and traversing the music-sheet, reversing-gearing connected to one of the rollers, a motor, and a shaft extending from the motor carrying a pinion on its free end, said pinion normally having connection with the other roller, in combination with means for swinging the fingers upward out of contact with the music-sheet comprising a rod extending under the fingers and a pivoted support for said rod at each end thereof, and means for simultaneously springing the shaft to throw the pinion into mesh with the reversing-gearing comprising a lever having connection with the shaft and connected with the finger-raising means by a link.

2. In an electrical piano-playing mechanism, a plurality of electromagnets, means having connection with the armatures of the magnets and the keys of the piano for operating said keys, a tracker-board, a battery arranged beneath the magnets having electrical connection therewith, a plurality of pivoted contact-fingers having downwardly-curved ends adapted to contact with the tracker-board, a perforated music-sheet arranged to pass between the curved ends of the fingers and the tracker-board, a rod extending beneath the fingers, pivoted arms supporting the rod at each end, rollers for supporting and traversing the music-sheet, reversing-gearing connected to one of the rollers, a motor, a shaft extending from the motor some distance and unsupported at its outer end so as to be sprung out of line, a pinion carried on the unsupported end of the shaft and normally having connection with one of the rollers, a lever engaging with the shaft for springing the same to throw the pinion into mesh with the reversing-gear, and a link connecting the pivoted arms with the lever adapted to simultaneously swing the rod upward to swing the fingers out of contact with the music-sheet when the shaft is sprung.

In testimony whereof I affix my signature in presence of two witnesses.

CARL E. BROWN.

Witnesses:
G. M. MARSHALL,
FRANK FRANKENBERG.