Dec. 3, 1968 E. W. ROGERS 3,414,855
WIDE FREQUENCY BAND TRANSFORMER FOR PLATE TYPE TRANSMISSION LINES
Filed April 3, 1967 2 Sheets-Sheet 1

Fig. 1.

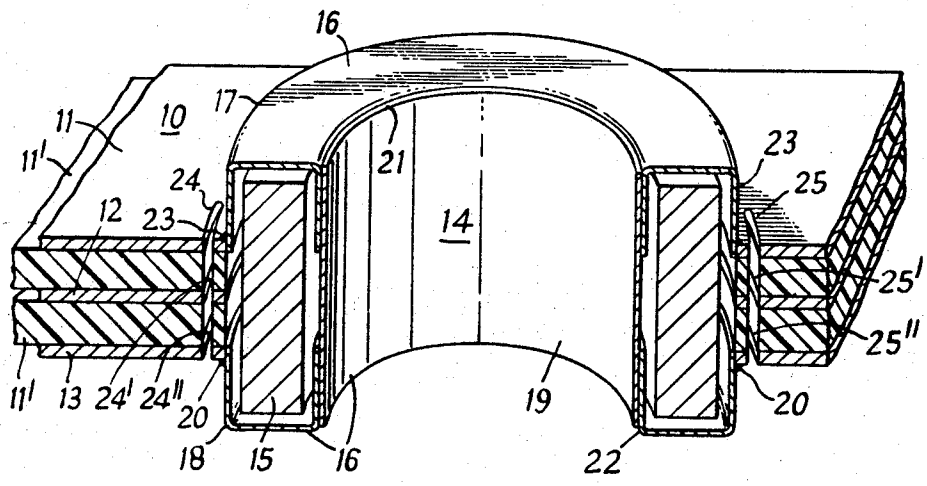

Fig. 1A.

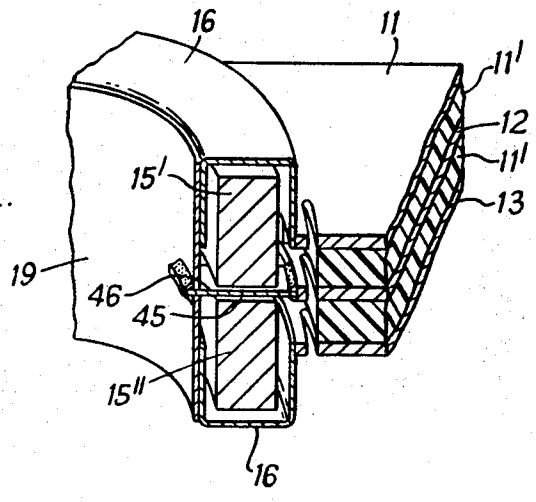

Dec. 3, 1968 E. W. ROGERS 3,414,855
WIDE FREQUENCY BAND TRANSFORMER FOR PLATE TYPE TRANSMISSION LINES
Filed April 3, 1967 2 Sheets-Sheet 2

Fig. 2.

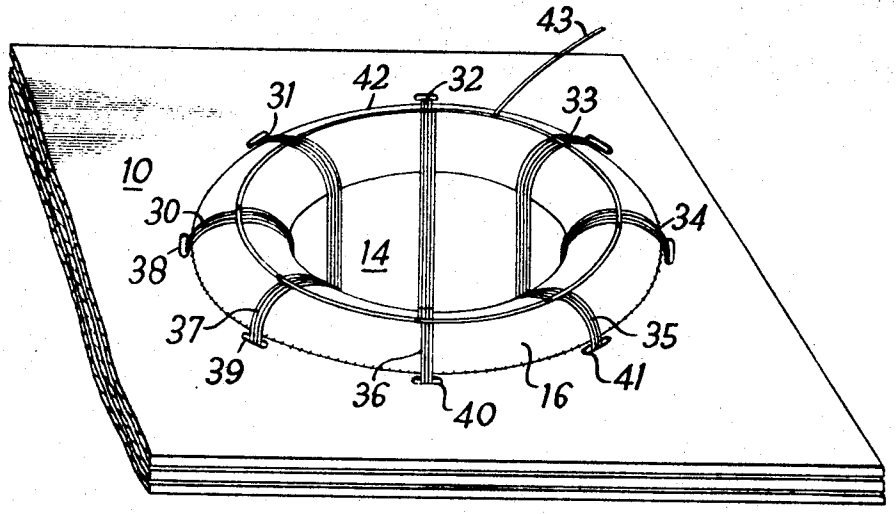

United States Patent Office 3,414,855 Patented Dec. 3, 1968

3,414,855

WIDE FREQUENCY BAND TRANSFORMER FOR PLATE TYPE TRANSMISSION LINES

Ernest William Rogers, Horley, England, assignor to Communications Patents Limited

Filed Apr. 3, 1967, Ser. No. 627,699
Claims priority, application Great Britain, May 27, 1966, 24,000/66
7 Claims. (Cl. 336—82)

ABSTRACT OF THE DISCLOSURE

The invention is a wide frequency band transformer, e.g. 100–30,000 kc./s., for conductive plate type transmission lines, having low leakage inductance. The transformer has a toroidal core positioned in aligned holes in the transmission line plates. It has one single-turn winding, which extends the length of the core and has opposite ends connected to different plates along the whole circumference of the holes, and a plurality of multi-turn coils wound around the core and passing through further aligned holes angularly spaced apart around the first-mentioned holes.

This invention relates to electric transformers and in particular to electric transformers for transmitting a band of frequencies, for use in conjunction with transmission lines having elements in the form of conductive plates.

In radio frequency apparatus in which currents in a wide frequency band have to be transmitted, for example from 100 to 30,000 kilocycles per second, it is customary to use transmission lines having the form of conductive plates in circuits of the apparatus where the characteristic impedance is required to have a value of the order of a few ohms.

Hitherto, difficulty has been experienced in designing transformers, for feeding current into or out of such transmission lines, to have high efficiency over the whole frequency band, because of excessive leakage inductance in the transformers and the presence of unwanted inductance in leads connecting the transformers to the lines. For example, a connecting lead having an inductance of only 1 microhenry has a reactance of 2 ohms at 30,000 kilocycles per second.

It is an object of the present invention to provide an improved transformer for feeding current into or out of a transmission line of the form having conductive plates separated by a dielectric, in which the ratio of leakage inductance/shunt inductance is reduced and in which the winding feeding current into or out of the transmission line is of a form such that its ends can be directly connected to the plates of the line.

Accordingly, the present invention provides an electric transformer for transmitting a band of frequencies, for use in conjunction with a transmission line of the form having at least two plates of conductive material separated by a dielectric, comprising a closed core of magnetic material and a plurality of windings, the core being supported within a single turn of one of the said windings, the single turn extending along the length of the core, one end of the single turn winding being connected to one plate of the transmission line, along the edge of a hole in the plate, the other end of the single turn winding being connected to the other plate of the transmission line, along the edge of a hole in the plate, a plurality of multi-turn coils connected to provide at least one other winding, the turns of each of the said coils being wound over the said single turn winding and through a hole, or a series of holes, provided in the transmission line around the single turn winding.

In order that the invention may be more readily carried into effect, an embodiment thereof will now be described in detail, by way of example, with reference to the accompanying drawings, in which:

FIGURE 1 is a simplified sectional view of parts of a radio frequency output transformer, according to the invention, assembled into a transmission line of plate form, in which the primary winding only is shown for the sake of clarity;

FIGURE 1A is a detail view of an alternate arrangement to that shown in FIGURE 1; and

FIGURE 2 is an isometric view of the same transformer in which both primary and secondary windings are shown.

Referring to FIGURE 1, a balanced type transmission line, shown generally by the reference number **10**, is formed by assembling, in a sandwich, three plates **11**, **12** and **13** of highly conductive metal, such as copper. An insulating member **11'** of low lose dielectric material such as polytetrafluoroethylene, is inserted between the plates **11** and **12** and between the plates **12** and **13**. For the sake of clarity, the distances between the plates **11** and **13** and the plate **12**, have been exaggerated in the figure.

As is generally known to those experienced in the art, the characteristic impedance of a plate type transmission line is determined by the width of the metal plates and by the thickness and dielectric constant of the insulating means.

At a convenient location, near to an extremity of the line in this example, a hole is cut, of a diameter to accommodate a single turn winding **16** of a transformer, indicated generally by the reference number **14**. A core **15**, of toroidal form, is almost totally enclosed within the winding **16**, formed of highly conducting metal having a thickness of 0.0124 inch, in this example. The core **15**, comprises one or more annular rings of magnetic material, for example of manganese zinc ferrite, the size and type of core material being chosen according to the power to be transmitted by the transformer, the frequency range and the maximum flux density permissible in order to avoid excessive distortion of the waveform.

The winding **16**, comprises two circular metal members **17** and **18** of the same size and of channel cross-section, with their inner flanges joined together by a cylinder of high conductivity material of the same thickness as the circular members. The outer edge of the flange of the member **18** is joined to the plate **13** by means of solder **20** along the junction of the two parts. The core **15** is inserted through the hole cut in the plates **11**, **12** and **13** and the dielectric, which is not shown in the drawing, so that one of the end faces of the core is in contact with the inner surface of the member **18**. The cylinder **19**, which has previously been joined to the member **17** by solder **21** along the junction with the inner flange of the member, is then inserted through the hole in the plates and the dielectric, so that the inner surface of the member **17** nearly rests on the other face of the core **15**, so that the cylinder **19** makes contact with the inner flange of the member **18** and so that the outer edge of the flange of the member **17** makes contact with the plate **11**. The flange of the member **17** is joined to the plate **11** by means of solder **23** along the junction between the plate and the flange. The cylinder **19** is joined to the member **18** by solder **22** along the junction between the cylinder and the flange.

Thus, the members **17** and **18** and the cylinder **19** provide a single turn winding close to the core and extending substantially along the whole length of the core, so that tight magnetic coupling between the winding **16** and the core is achieved.

Eight evenly-spaced groups of aligned slots are provided in the plates **11**, **12** and **13** and in the dielectric, around the outer edge of the single turn winding, to enable turns

of insulated covered wire, forming separate section of a secondary winding, to be wound over the winding **16**. In the drawing, two such groups of slots **24**, **24'**, **24''** and **25**, **25'**, **25''** are shown. To prevent chafing of the insulation, each slot is lined with insulating material, not shown in the drawing.

Referring to FIGURE 2, the transformer **14** is provided with a secondary winding of eight sections, indicated by reference numbers **30** to **37** inclusive. Each section has four turns of enamelled copper wire, wound over the single turn winding **16** and through one of the eight slots. Four slots only, **38**, **39**, **40** and **41**, associated with the coils, **30**, **37**, **36** and **35** respectively, are shown in the drawing. In order to keep leakage inductance to a minimum, the secondary sections are distributed around the core. The eight windings, each of four turns of wire, are connected electrically in parallel. For this purpose, a ring **42**, of 16 S.W.G. tinned copper wire is provided, to which the start of each winding is connected. A similar ring is provided which is not shown in the drawing, to which the finish of each winding is connected. Connections to external apparatus are made at convenient positions on the two rings. One such connection is shown in the drawing and is indicated by the reference number **43**.

The transformer **14** may be used either for transferring radio frequency energy from an external source into the transmission line **10** or for transferring radio frequency energy out of the transmission line to an external load.

The choice of a suitable ferrite core **15** for use with radio frequency transformer **14**, shown in FIGURE 1, is made by reference to technical information issued by the manufacturers of such cores. This information, includes physical properties of the core such as permeability and power loss.

The volume of the core and the number of turns necessary to obtain a desired value of inductance is determined using well-known formulae. The inductance of the primary winding is chosen to have a value such that the reactance of the winding connected to the line, at the lowest frequency, presents a negligible shunt on the characteristic impedance of the transmission line.

In an example of a transformer constructed according to the invention, the transformer functions as a radio frequency output transformer, providing optimum transfer of power from a transmission line having a characteristic impedance of 3.12 ohms into an external resistive load of 50 ohms.

A core of manganese zinc ferrite is used, having an outside diameter of approximately 38 millimetres and cross-sectional area of approximately 40 square millimetres. The transformer is accommodated in a plate type transmission line having a length approximately 9 inches and a width of approximately 2 inches and is capable of delivering powers of up to approximately 100 watts into a load of 50 ohms, over a range of frequencies from 1,000 kilocycles to 30,000 kilocycles.

In this arrangement, a primary inductance of 1.5 microhenries is obtained. With the secondary winding shorted, the leakage inductance is less than 3×10^{-3} microhenries.

Referring to FIGURE 1A, in an alternate arrangement, the core **15** comprises two similar units **15'** and **15''** with a small gap **45** between the units to enable the plate **12** to be connected to the center point of the winding **16**, using a metal strip **46** having a low inductance.

Further windings with groups of wires passing through additional insulated aligned slots may be provided for feeding radio frequency potentials of low amplitude to an external measuring device and for feeding a feedback potential to input electrodes of amplifying means connected to the transmission line **10**.

In yet a further alternative arrangement, the core is of rectangular cross-section and of square form, and is almost totally enclosed within a single turn winding of similar shape, the secondary sections being wound over the single turn primary along the straight portions of the turn.

What I claim is:

1. An electric transformer for transmitting a band of frequencies, for use in conjunction with a transmission line of the form having at least two plates of conductive material separated by a dielectric, comprising a closed core of magnetic material and a plurality of windings, characterised in that the plates have first aperture portions, dimensioned to receive said magnetic core, and at least one further aperture portion, the core being supported within a single turn of one of the said windings, the single turn extending along the length of the core, one end of the single turn winding being connected to one plate of the transmission line, along the edge of the first said aperture of the plate, the other end of the single turn winding being connected to the other plate of the transmission line, along the edge of the first said aperture of that plate, a plurality of multi-turn coils connected to provide at least one other winding, the turns of each of the said coils being wound over the said single turn winding and passing through a further said aperture of the plates.

2. An electric transformer as claimed in claim **1**, characterised in that said other winding has the plurality of multi-turn coils arranged in equi-angularly spaced apart relationship around the said core and said single turn, so as each to pass through one of a series of equi-angularly spaced apart holes in the transmission line.

3. An electric transformer as claimed in claim **2**, characterised in that the said plurality of multi-turn coils are connected in parallel with each other, the starts and the ends of the coils being respectively connected together to a pair of conductive rings mounted concentrically with the core.

4. An electric transformer as claimed in claim **3**, characterised in that, for use in conjunction with a transmission line of the form having three plates of conductive material, each separated from the next by a dielectric, the core of the transformer comprises two similar units with a small gap between the units so as to permit connection of the central one of the three said plates to the centre point of the single turn winding.

5. An electric transformer as claimed in claim **1**, characterised by one or more further windings comprising groups of wires passing through further holes in the said plates and dielectric separating the plates of the transmission line.

6. An electric transformer as claimed in claim **1**, characterised in that the core is toroidal, and the said single turn is a circumferentially apertured hollow toroidal member surrounding the toroidal core and co-axial therewith.

7. An electric transformer as claimed in claim **1**, characterised in that the core is of rectangular cross-section and of square form, the said single turn is of similar shape to partially enclose the core and the multi-turn coils are spaced apart along the straight portions of the said single turn.

References Cited

UNITED STATES PATENTS

2,785,265	3/1957	Salisbury	336—82
2,901,713	8/1959	Hartmann	336—82
3,305,800	2/1967	Velsink	333—82

LEWIS H. MYERS, *Primary Examiner.*

T. J. KOZMA, *Assistant Examiner.*