J. H. BARR.

TYPE WRITING MACHINE.

APPLICATION FILED DEC. 12, 1916.

1,300,687.

Patented Apr. 15, 1919.

FIG. 1.

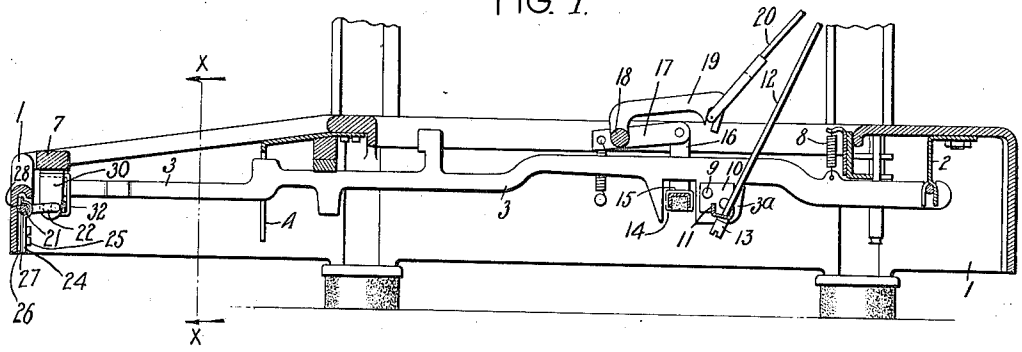

FIG. 2.

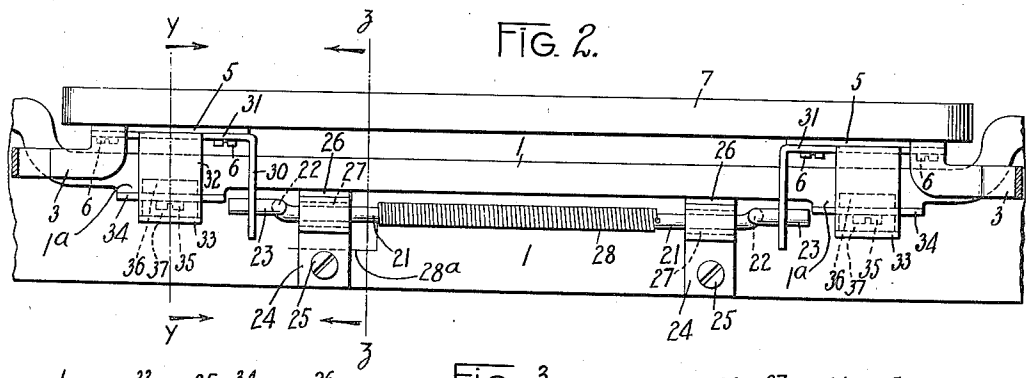

FIG. 3.

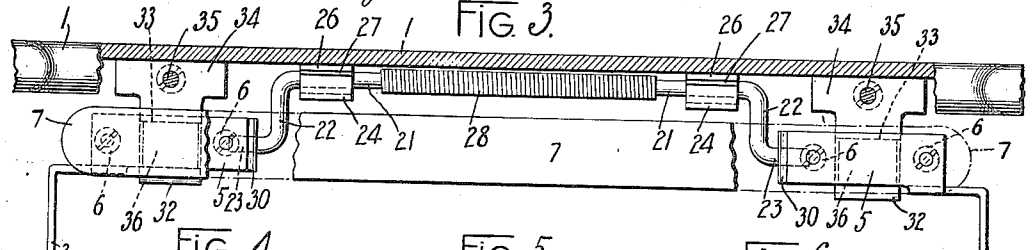

FIG. 4.

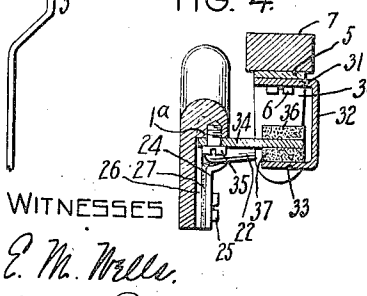

FIG. 5.

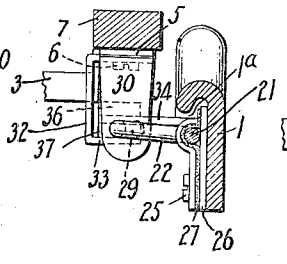

FIG. 6.

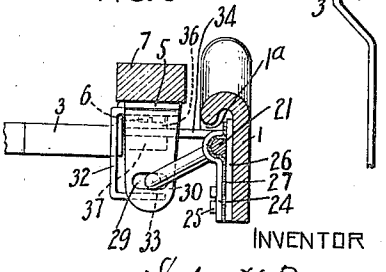

WITNESSES

E. M. Wells.

M. W. Poole

INVENTOR

John H. Barr.

By Jacob Felbel

HIS ATTORNEY

UNITED STATES PATENT OFFICE.

JOHN H. BARR, OF NEW YORK, N. Y., ASSIGNOR TO REMINGTON TYPEWRITER COMPANY, OF ILION, NEW YORK, A CORPORATION OF NEW YORK.

TYPE-WRITING MACHINE.

1,300,687. Specification of Letters Patent. Patented Apr. 15, 1919.

Application filed December 12, 1916. Serial No. 136,492.

To all whom it may concern:

Be it known that I, JOHN H. BARR, a citizen of the United States, and resident of the borough of Manhattan, city of New York, in the county of New York and State of New York, have invented certain new and useful Improvements in Type-Writing Machines, of which the following is a specification.

My present invention relates to space bar mechanism for typewriting machines, and its principal object is to provide novel mechanism for insuring an even or parallel depression of the space bar regardless of the point at which the pressure may be applied thereto. The space bar is usually constructed of wood, and is of considerable length, connecting the front end portions of the two spacing levers, which extend forward at opposite sides of the keyboard. Because of this construction it has resulted heretofore that when the space bar was operated by pressing it near one end, a faulty operation of the escapement devices was likely to take place due to the failure of the opposite end portion of the space bar from that depressed to follow it down. My invention overcomes this defect by providing an equalizing device connected to opposite end portions of the spacing bar and operative when one end of the space bar is actuated to transmit the movement to the opposite end portion of the space bar and positively actuate it also.

To the above and other ends which will subsequently appear my present invention consists in the features of construction, combinations of devices, and arrangements of parts hereinafter described and particularly pointed out in the claims.

In the accompanying drawings, which illustrate the preferred form of my invention applied to a No. 10 front-strike Remington typewriting machine,

Figure 1 is a fragmentary front-to-rear vertical sectional view of the lower portion of said machine with my invention applied thereto.

Fig. 2 is a transverse vertical sectional view, taken on a plane indicated by the dotted line *x—x* in Fig. 1 and looking forward, Fig. 2 being drawn to a larger scale than Fig. 1.

Fig. 3 is a fragmentary plan view, partly in section, showing the space bar and the equalizing means or device.

Fig. 4 is a sectional view taken on a plane indicated by the dotted line *y—y* in Fig. 2 and looking in the direction of the arrows at said line.

Fig. 5 is a sectional view taken on the plane indicated by the dotted line *z—z* in Fig. 2 and looking in the direction of the arrows at said line.

Fig. 6 is a view corresponding to Fig. 5 but showing the space bar depressed.

Referring first to Fig. 1, the main frame of the machine comprises a base portion 1 in the rear of which is provided a combined fulcrum and guiding member 2 on which the type bar key-levers, not shown herein, are guided and fulcrumed. Outside the said set of key-levers are arranged two parallel spacing levers 3 which are fulcrumed and guided by the member 2, said spacing levers extending forward through a guide comb 4, their front end portions being off-set inward slightly and terminating in horizontal plate-like portions or tabs 5 to which are screwed by headed screws 6 (Fig. 2) the end portions of a connecting cross bar or space bar or key 7, which as usual is preferably made of wood. Springs 8 having a stationary anchorage at their upper ends and at their lower ends connected to the rear end portions of the levers 3 operate to restore the spacing frame comprising the levers 3 and space bar 7 to normal position after operation and also maintain the levers properly engaged with the member 2. The spacing levers are provided with depending portions 3^a to which are secured by screws 9 the end portions or tabs 10 of a second cross bar 11 which is also comprised in the spacing frame and serves to strengthen it as well as to provide a connection to the escapement devices (not shown). The connections between the space bar or frame and the escapement devices comprise a link 12 which passes through a hole near the middle of the cross bar 11, said link at its lower end being provided with a head 13 which prevents it from being pulled out of the cross bar. When the space bar 7 is depressed the motion is transmitted through the levers 3 to the cross bar 11 and thence through the link 12 to the dog rocker or escapement devices. The depending portions 3^a are provided with slots

indicated at 14 through which loosely pass the end portions of the universal bar 15 that is connected in the usual way by links or arms 16 with crank arms 17 that project rearward from a rock shaft 18 having a middle crank arm 19 that is connected by a link 20 with the dog rocker.

The novel device for insuring even depression of the space bar throughout its length comprise a rock shaft 21, which is mounted behind the rear of the front portion or bar of the base 1 and terminates in rearwardly extending portions or crank arms 22 having outwardly extending engaging portions 23. The rock shaft takes bearings in bracket members 24 which are secured by screws 25 to the inner side of the front part of the base 1. These brackets are flat plates bent near their upper ends to provide half round bearings. Washer plates 26 are arranged between the base and the brackets and preferably layers 27 of felt or other like material are inserted between the washers and the brackets and provide a direct bearing or bushing for the rock shaft. A coiled spring 28 surrounds the body of the rock shaft, one end of the spring engaging in a hole in the rock shaft and the other end 28^a being secured behind one of the washers 26. The portions 23 of the rock shaft engage loosely in slots indicated at 29, formed in downwardly extending ears 30 of pieces 31 that are secured in place at the under side of the space bar 7 below the tabs 5 by the screws 6. The depending slotted portions 30 are at the inner ends of the pieces 31 and have loose connections, through the engagement of the parts 23 with the slots 29, with the opposite outer end portions of the space bar. The pieces 31 further comprise portions 32 bent downward centrally from their rear edges, the portions 32 terminating in forwardly bent horizontal lips 33 that act as stop devices. These pieces 31 coöperate with stationary stop plates 34 that are secured by screws 35 to the under faces of thickened portions 1^a on the front portion of the base 1. Said stop plates 34 extend rearward between the body portions of the pieces 31 and the lips 33 and are provided at their top and bottom sides with felt pads 36 and 37 which serve as stops proper and promote noiselessness when they coöperate with the pairs of double stops 31, 33. Normally the lips 33 are maintained in engagement with the under pads 37 by the joint actions of the springs 8 and 28, as will be understood from Figs. 1, 4 and 5. The normal position of the space bar and connected parts is thus determined. When the space bar is depressed its downward movement, as well as that of the associate movable parts, is limited by the engagement of the body of the parts 31 with the top pads 36, as will be understood from Fig. 6. By reason of the loose engagement of the equalizing device or member 21—23 with the depending parts or ears 30, the normal action of the space bar is not interfered with. At the same time the equalizing devices insure that the space bar shall be evenly depressed even though it be operated at near one end only. In such event the downward movement of the space bar at this operated end will be transmitted to the crank arm 22 that underlies it, thus causing a partial rotation of the rock shaft 21. This turning movement of the rock shaft is transmitted to the other crank arm 22 and thence through the end 23 and slotted part 30 to the associate end of the space bar 7. The result is that the space bar will move down evenly, all of its parts receiving an equal amount of downward movement, thus avoiding any tilting action which might cause a failure of the escapement mechanism to operate, a result quite common heretofore with other constructions.

It will be observed that by my present invention there is provided a cross bar that connects two levers or depressible members that are arranged parallel with each other some distance apart, in combination with means to insure an even depression or actuation of both end portions of such cross bar or space bar, even though the actuating pressure be applied at one end or extremity of such bar; that this space bar controlling means is separate or distinct from the space bar itself; that it operates to transmit movement positively from one end of the space bar to the other; that it is connected loosely by pin and slot connections to opposite end portions of the space bar; that in the present instance it comprises a double crank or a rock shaft provided near its ends with two crank arms which engage in slotted parts or depending portions or ears at the under side of the space bar; and that in the present instance these parts are detachable slotted pieces which also have portions that act as stop devices.

Various changes may be made without departing from my invention.

What I claim as new and desire to secure by Letters Patent, is:

1. In a typewriting machine, the combination of a pair of parallel levers pivotally supported on the main frame of the machine, a cross bar connecting said levers, and an equalizing device supported on the main frame and comprising a rock shaft having bearings in the base frame of the machine and provided with angularly extending portions, said portions having loose connections with parts extending from said cross bar.

2. In a typewriting machine, the combination of a depressible space bar, and means for insuring an even and simultaneous depression of both ends of said space bar, said

means comprising a double crank constituted by a rock shaft and two crank arms extending therefrom and terminating in offsets, said rock shaft taking bearings in the machine frame and said offsets having loose connections with extensions rigid with said space bar.

3. In a typewriting machine, the combination of a depressible space bar, and means for insuring an even depression of both ends of said space bar, said means comprising a rock shaft and crank arms connected to opposite end portions of said rock shaft, said crank arms having loose engagements in slotted arms fixedly secured to and depending from said space bar, and a spring coiled around said rock shaft and effective on said space bar.

4. In a typewriting machine, the combination of a depressible space bar; and means for insuring an even depression of both ends of said space bar, said means comprising a rock shaft, crank arms connected to opposite end portions of said rock shaft, and slotted pieces secured to said space bar, the free ends of said crank arms engaging in slots in said pieces.

5. In a typewriting machine, the combination of a space bar, spacing levers connected by said space bar, a rock shaft mounted behind the front portion of the base frame of the machine and terminating in rearwardly extending crank arms having outwardly extending portions, bent plates secured to the base frame and in which plates said rock shaft takes bearings, a coiled restoring spring surrounding the rock shaft, and ears secured to the underside of the space bar and depending therefrom, said ears being provided with slots in which said outwardly extending portions loosely engage.

6. In a typewriting machine, the combination of two parallel levers spaced apart, a cross bar connecting said two levers and adapted to be operated by hand, a second cross bar connecting said levers, a link connected to said second cross bar, and a spring controlled rock shaft provided with crank arms at its opposite end portions, one of said cross bars being loosely connected with said crank arms.

7. In a typewriting machine, the combination with a depressible space bar, of stop devices therefor comprising U-shaped stop members secured to the under side of said space bar, and a pair of stationary members provided with pads on their top and bottom faces, the pads being adapted to coöperate with the U-shaped stop members.

8. In a typewriting machine, the combination of a pair of parallel spacing levers, a space bar connecting said levers, restoring springs for said levers, stationary stops, a pair of double stops mounted on said space bar and each coöperating with one of said stationary stops to limit movements of said space bar in opposite directions, and space bar controlling means comprising a double crank, the crank arms whereof have oppositely disposed portions engaging loosely in slots in parts depending from said space bar.

9. In a typewriting machine, the combination of a pair of parallel spacing levers, a space bar connecting said levers and provided with depending slotted parts, restoring springs for said levers, and space bar controlling means comprising a double crank and a noiseless bearing on the stationary part of the machine for said crank, the crank arms having oppositely disposed portions engaging loosely in the slots in said depending parts.

Signed at the borough of Manhattan, city of New York, in the county of New York and State of New York, this 11th day of December, A. D. 1916.

JOHN H. BARR.

Witnesses:
CHARLES E. SMITH,
L. NELSON.