Nov. 26, 1946. C. W. HARTWIG 2,411,789

BOWLING ALLEY

Filed Aug. 5, 1943 7 Sheets-Sheet 1

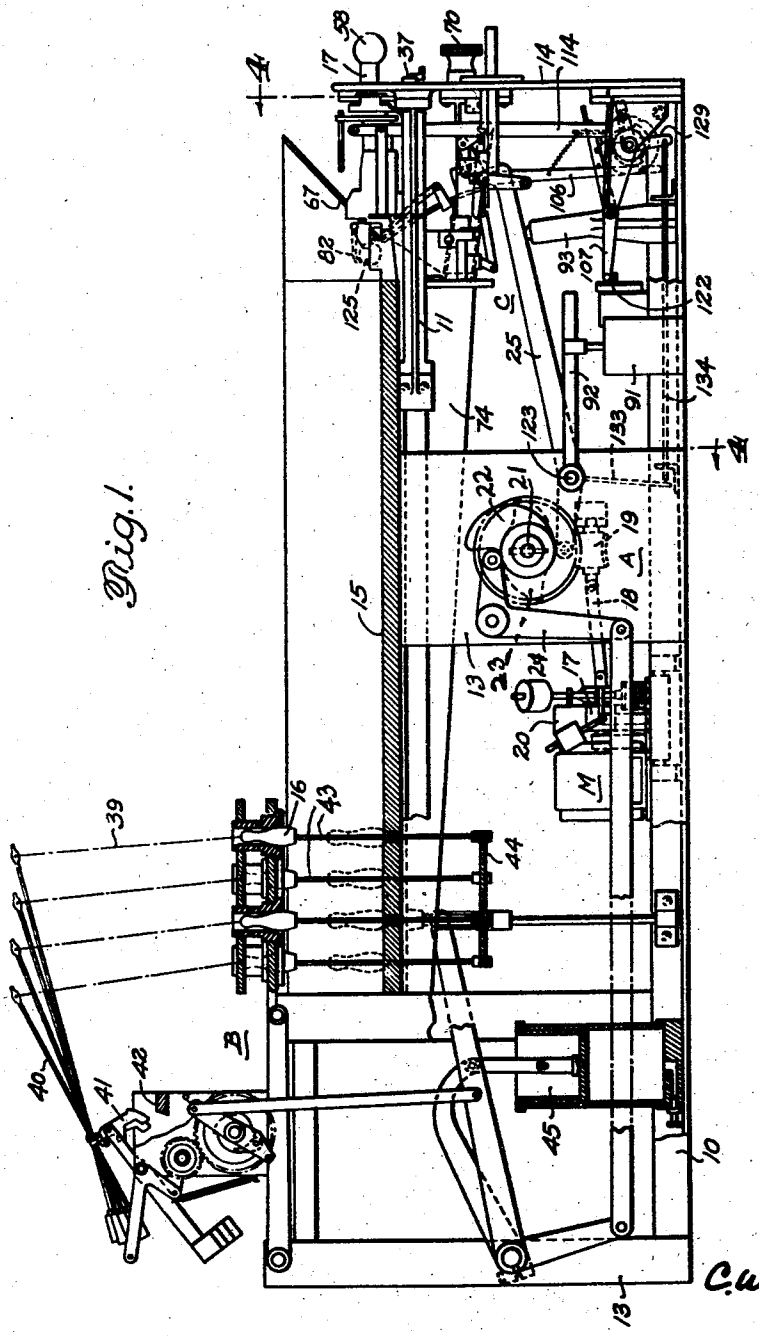

Fig. 1.

Inventor
C. W. Hartwig

By Lyons Doolittle.
Attorney

Nov. 26, 1946. C. W. HARTWIG 2,411,789

BOWLING ALLEY

Filed Aug. 5, 1943 7 Sheets-Sheet 2

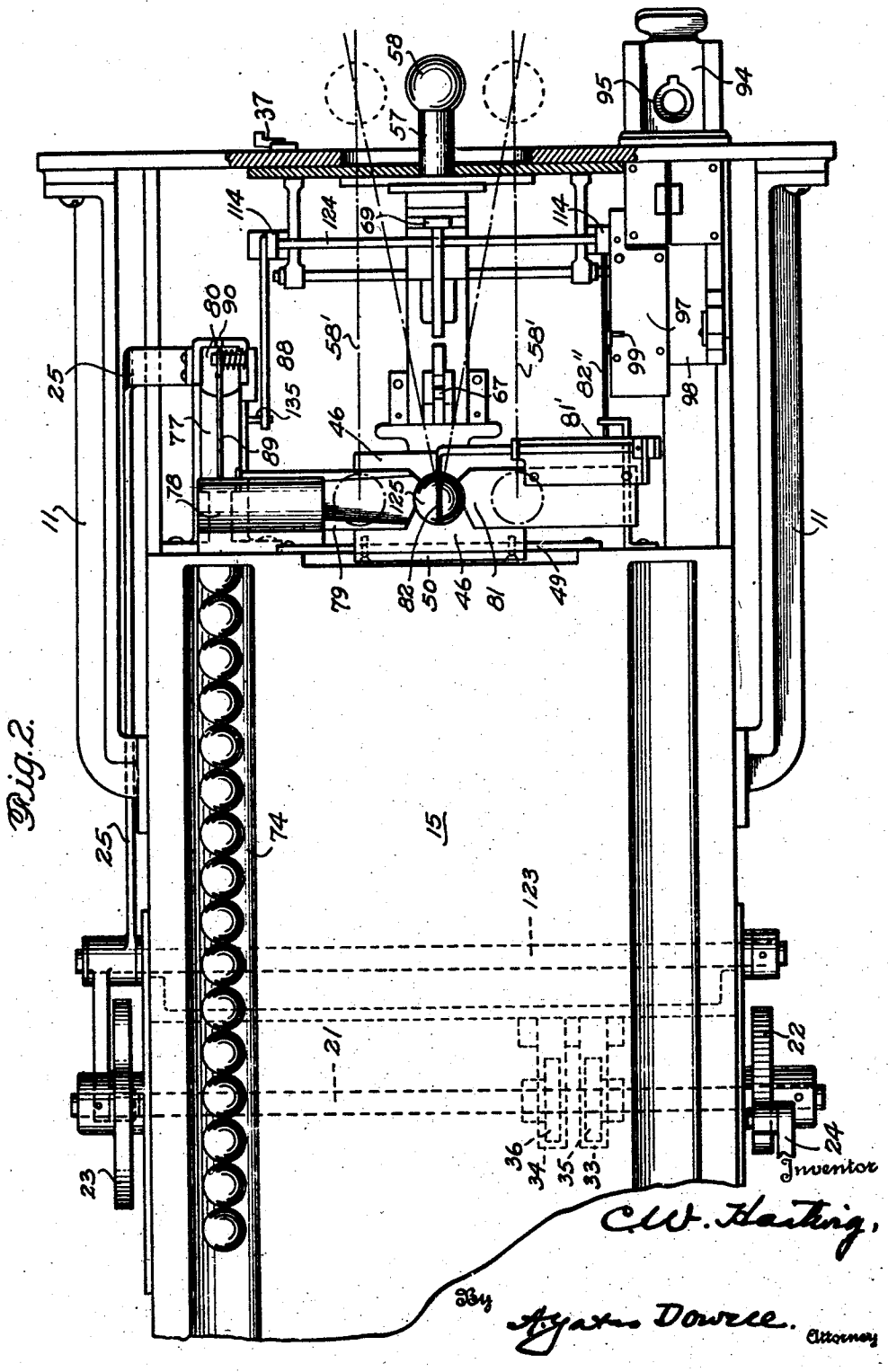


Fig. 2.

Inventor
C. W. Hartwig,
By Hyatt Dowell. Attorney

Nov. 26, 1946. C. W. HARTWIG 2,411,789

BOWLING ALLEY

Filed Aug. 5, 1943 7 Sheets-Sheet 3

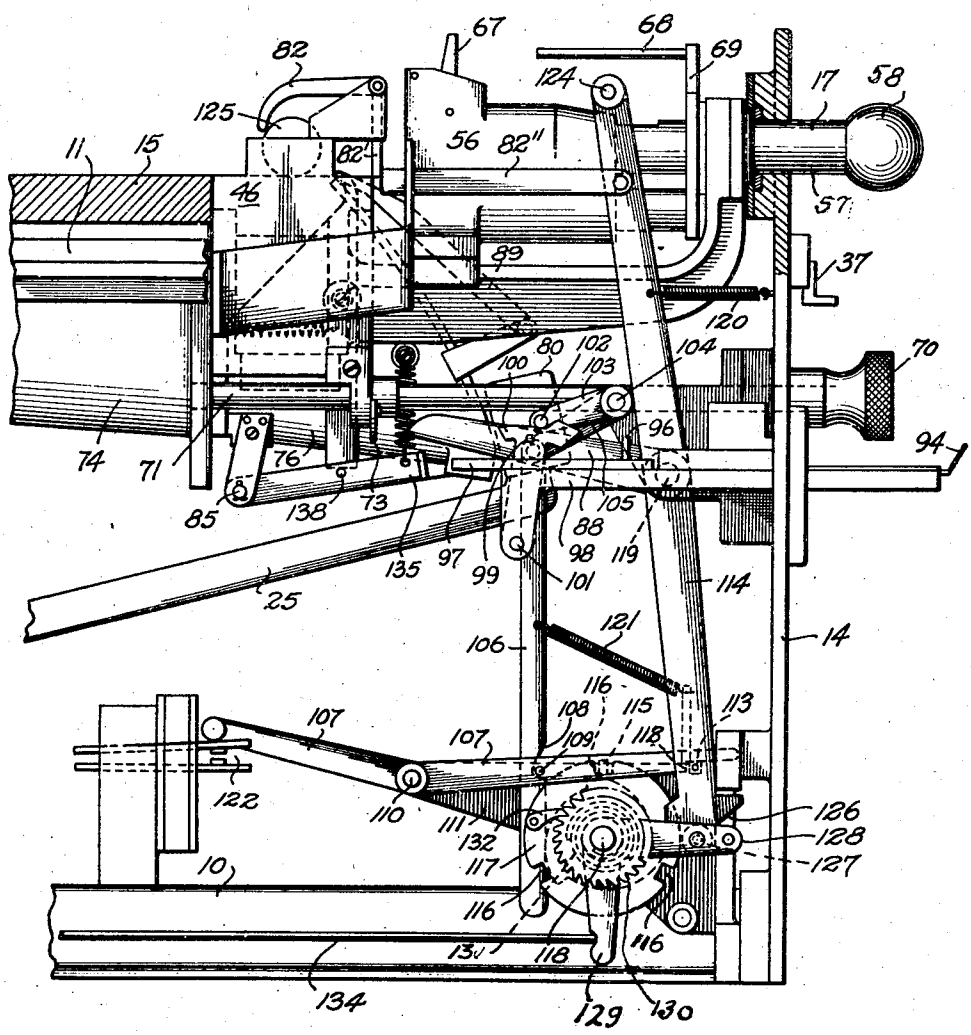


Fig. 3.

Inventor

C. W. Hartwig

By A. Yates Dowell, Attorney

Nov. 26, 1946. C. W. HARTWIG 2,411,789

BOWLING ALLEY

Filed Aug. 5, 1943 7 Sheets-Sheet 4

Fig. 4.

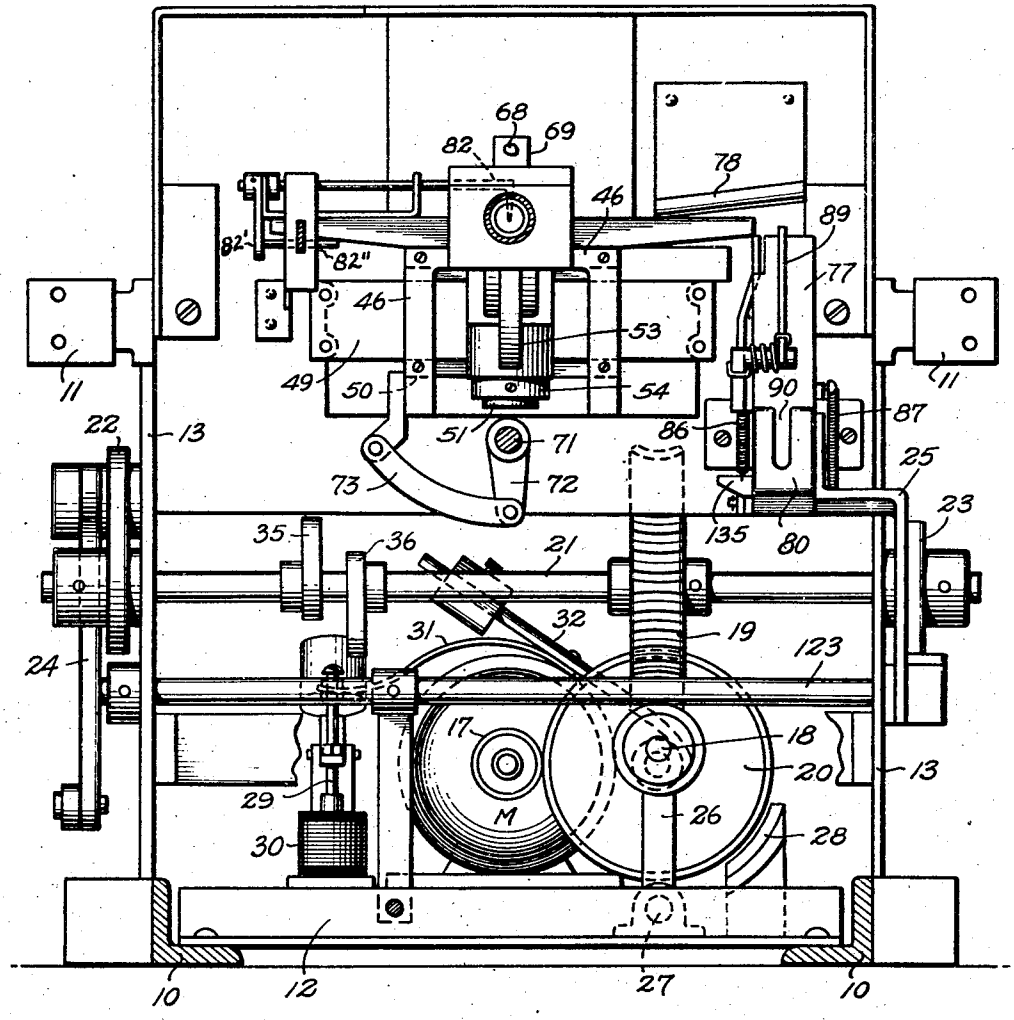


Inventor

C. W. Hartwig

By Agate & Dowell.

Attorneys

Nov. 26, 1946. C. W. HARTWIG 2,411,789

BOWLING ALLEY

Filed Aug. 5, 1943 7 Sheets-Sheet 5

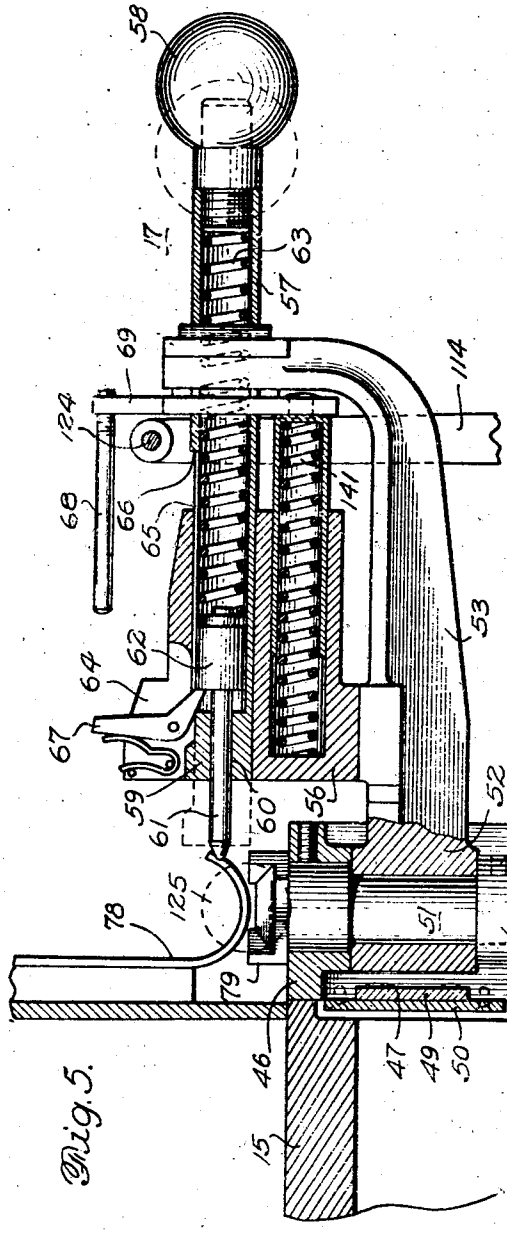


Fig. 5.

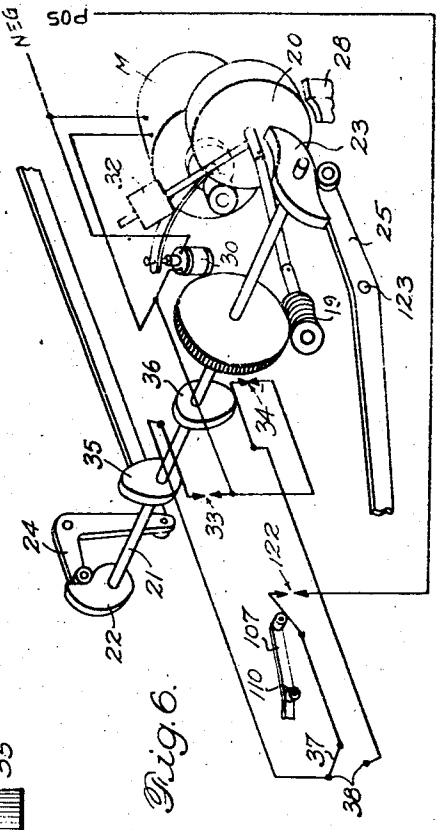


Fig. 6.

Inventor

C. W. Hartwig

By Lyon & Donnell

Attorney

Nov. 26, 1946. C. W. HARTWIG 2,411,789

BOWLING ALLEY

Filed Aug. 5, 1943 7 Sheets-Sheet 6

Fig. 7.

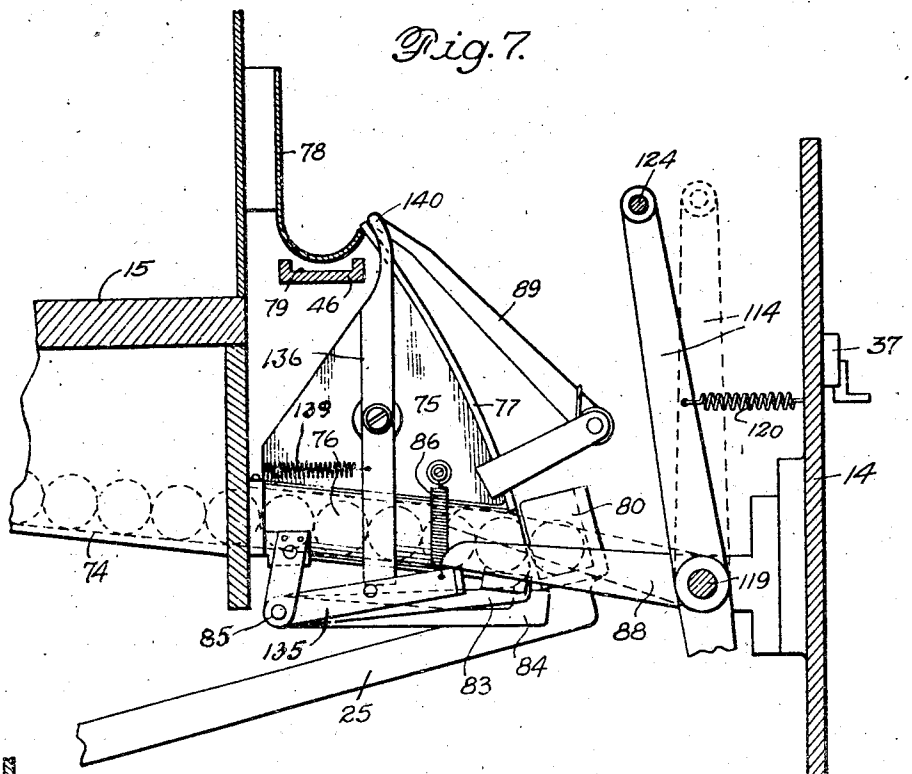


Fig. 8.

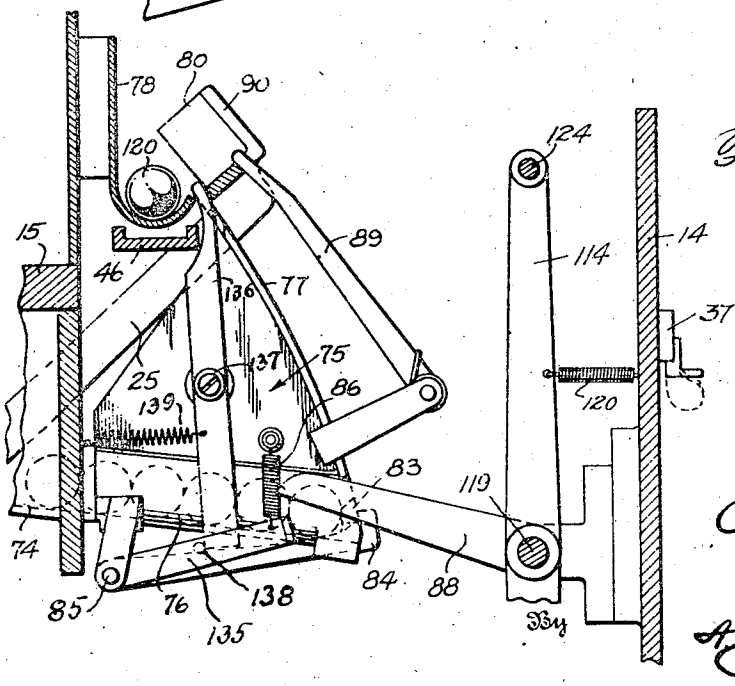


Inventor
C. W. Hartwig
By
Agatha Dance
Attorney

Nov. 26, 1946. C. W. HARTWIG 2,411,789

BOWLING ALLEY

Filed Aug. 5, 1943 7 Sheets-Sheet 7

Fig. 9.

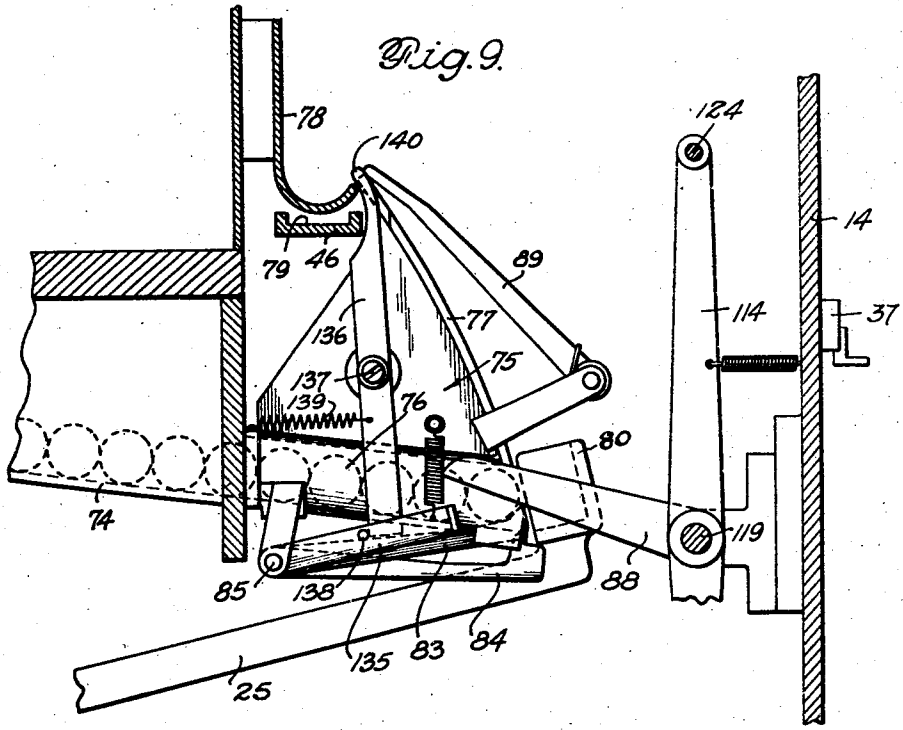


Fig. 10.

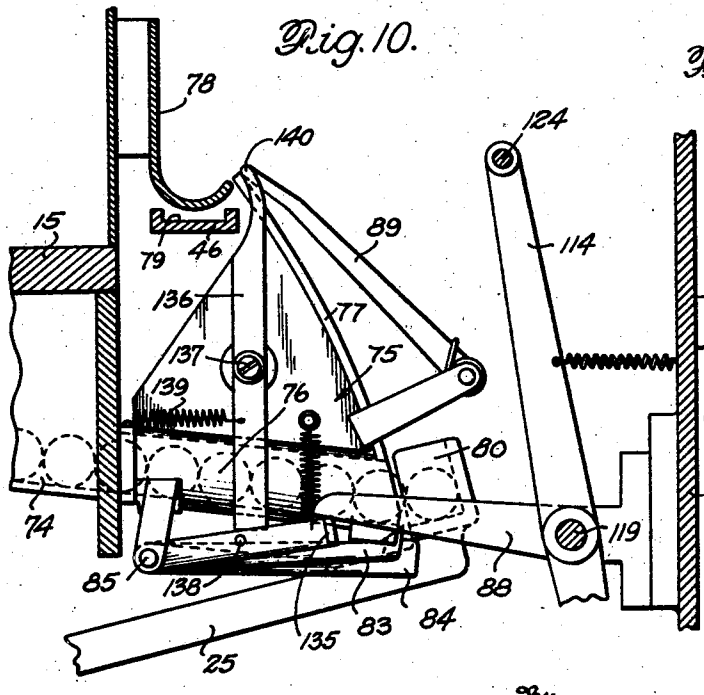


Fig. 11.

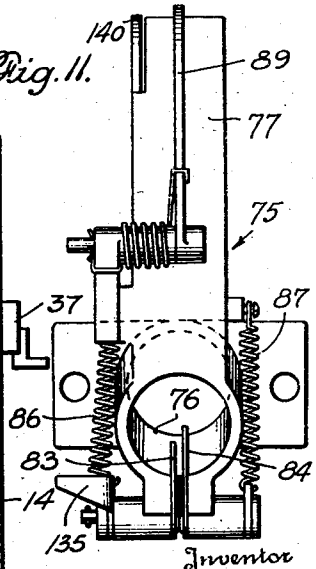


Inventor

C. W. Hartwig

By Ryan Davis.

Attorney

Patented Nov. 26, 1946

2,411,789

# UNITED STATES PATENT OFFICE

2,411,789

## BOWLING ALLEY

Charles W. Hartwig, New York, N. Y.

Application August 5, 1943, Serial No. 497,493

20 Claims. (Cl. 273—38)

1

My invention relates to a mechanical ball game apparatus and more particularly to a miniature bowling alley game apparatus as is shown and described in my copending application Serial Number 255,506, filed February 9, 1939, of which this application is a continuation-in-part.

It is important in the playing of any bowling alley game that the pins be precisely set up in accordance with the accepted or standard geometrical arrangement, if the game is to be fair to all of the players involved and the score is to be commensurate with the skill of the player. It will be understood, therefore, that it is desirable to eliminate the human element in the setting up and arranging of the pins as well as to all other mechanical operations of the game in order to insure the same setting of the pins and operations of the parts to all players. It is therefore an object of this invention to faithfully accomplish these results.

A further object of my invention is to provide a bowling alley game apparatus having a ball propelling means mounted for transverse slidable adjustment relative to one end of the alley with means to deliver a ball to operative position by the propelling means in all transverse adjusted positions thereof.

Another object of my invention is to provide a ball propelling means for a bowling alley game apparatus having a pivotal mounting at one end adapted for transverse sliding movement relative to the alley and means operative to deliver a ball to the pivotal mounting of the propelling means at all transverse slidable positions thereof.

Another object of my invention is to provide ball return and mechanically operated ball delivery means associated therewith in a bowling alley game apparatus having means under the joint control of the delivery means and the ball propelling means for selectively releasing returned balls for transfer to said delivery means upon each actuation of the apparatus.

Still another object of my invention is to provide a mechanically operated bowling alley game apparatus having means to automatically deliver balls to a propelling means adjacent one end of the alley, with means operable on the delivery of a predetermined number of balls for rendering the delivery means inoperable no matter how many times the propelling means is operated.

A further object of my invention is to provide a mechanical bowling alley apparatus having a mechanical pin setting means at one end of the alley floor, a mechanical ball propelling means at the opposite end of the alley floor for projecting balls along the alley toward the pins, actuating means associated with both of said means for automatically operating the pin setting means on alternate actuations thereof and including ball delivery means operable on each actuation thereof to deliver or withhold a ball, depending upon a previous actuation of the ball propelling means, so that in the event of a strike, where only a single actuation of the ball propelling means is required for a frame, the pins may be reset by successive operations of the actuating means without delivering more than one ball to the ball propelling means.

2

A still further object of my invention is to provide a bowling alley game apparatus which is fully automatic, simple and foolproof in construction and which includes a mechanical pin setting device in conjunction with a mechanical ball propelling, returning and delivering apparatus all under the control of a single actuating means.

Other objects and advantages of the instant invention will be apparent from the following description:

Fig. 1 is a side elevational view of my miniature bowling alley game apparatus, with the outer supporting casing removed and with certain portions of the operating mechanism shown in dotted lines while other portions are shown in sections to illustrate generally the relationship of the parts.

Fig. 2 is an enlarged, fragmentary, top plan view of the game apparatus taken adjacent to the forward or operating end thereof to illustrate the transverse slidable relation of the inner pivoted ball propelling mechanism with respect to the ball delivery mechanism, at the forward end of the alley.

Fig. 3 is a side elevational view of the forward portion of the game apparatus shown in Fig. 2, with certain of the supporting frame members broken away and with portions of the ball elevating and delivery mechanism shown in dotted lines.

Fig. 4 is a transverse sectional view taken approximately on the lines 4—4 of Fig. 1 and looking in the direction of the arrows to show the common driving mechanism for the ball elevating and delivery mechanism and the pin setting up mechanism with the manual and automatic controls for these cooperating mechanisms.

Fig. 5 is a further enlarged fragmentary view of the manually operable ball propelling means with portions thereof shown in elevation and others in section to illustrate the relation of the pivotal mounting of the propelling means to its

slidable support and the ball delivery means for all slidable positions thereof.

Fig. 6 is a schematic diagram of the operating mechanism shown in Figs. 1 and 4 and the electrical control circuits therefor.

Fig. 7 is an enlarged fragmentary view of the ball return, elevating and delivering mechanism with certain portions thereof shown in full and dotted lines, to illustrate by full lines the position of the parts when the mechanism is in locked out or in inoperative position and in dotted lines to show the position of the parts when ready for play.

Fig. 8 is a view similar to Fig. 7, showing the position of the parts when the mechanism has been rendered operative, and the manual control switch has been operated to elevate a ball to deliver the same to the propelling means, not shown.

Fig. 9 is another view of the mechanism shown in Fig. 7 with the parts in the position that they will assume when the ball elevating means has returned to normal operating position from the position shown in Fig. 8.

Fig. 10 is a still further view of the mechanism illustrated in Fig. 7 showing the positions of parts when the plunger of the ball propelling means, shown in detail in Fig. 5 and in combination in Fig. 3, is pressed inwardly to propel the ball delivered by movement of the parts as illustrated in Fig. 8 and

Fig. 11 is a front elevational view of the ball dispensing means illustrated in Figs. 7 to 10 inclusive.

Referring now to the drawings in detail and particularly to Fig. 1, I have shown a supporting base or chassis for the mechanism which is composed mainly of vertically spaced longitudinally extending channel irons **10** and **11** to which a plurality of similar cross members **12**, upright members **13** and front plate **14** are rigidly secured to form an open sided box-like frame, that is generally rectangular in shape. In practice this supporting frame would be housed within an ornamental and protecting enclosure or casing of a desired shape such as that suggested in Fig. 1, of my copending application Serial No. 255,506, filed Feb. 9, 1939, of which this application is a continuation-in-part.

Extending horizontally between and secured to the upper longitudinal chassis members **11**, is the game board or alley floor **15**, of the bowling game apparatus forming the subject matter of this application.

As is shown in dotted lines in Fig. 1, the playing pins **16** occupy predetermined positions on the alley floor adjacent the rear or inner end thereof, whereas the ball propelling means **17** with its associated mechanism occupies a position adjacent the front or forward end of the alley floor.

Beneath the alley floor and within the box-like supporting frame is mounted the interconnecting and automatic operating mechanism A for the pin elevating and setting up means B and the associated ball delivering and control means C.

As is clearly disclosed in my former application, above identified, the power operating mechanism A includes an electric motor M, on the rotary shaft of which is mounted a driving pulley **17**, having a peripheral friction face adapted to drive a flexible shaft **18**, having worm gearing **19**, by frictional engagement of the pulley **17** with the periphery of a friction wheel **20**, mounted on one end of the flexible shaft. This power operating mechanism also includes a transversely extending shaft **21**, which is rotatably mounted at its ends in a pair of the uprights **13** on opposite sides of the frame so as to extend there beyond. A single lobe cam **22** and a double lobe cam **23** are mounted on the opposite extending ends of this shaft **21** with which bell crank levers **24** and **25** respectively, cooperate to drive the pin setting means B and ball return and control means C, in definite timed relationship.



In order to provide independent control of the motor M and the driven flexible shaft **18** to insure properly timed starting and stopping of the associated mechanisms for automatic control of the pin operating means at one end of the alley floor and the ball returning means at the opposite end of the alley, the end of the flexible shaft **18** which carries the friction wheel **20** is mounted in a rocking bracket **26** so that it may be moved to and from the driving pulley **17**. The pivotal mounting **27** of the bracket **26**, and the base of the motor M are both mounted on one of the cross members **12** of the frame as is also a fixed friction brake member **28** against which the friction wheel **20** is normally held. Thus in the normal inoperative position of these parts the friction wheel **20** is held stationary and out of engagement with the pulley **17**, by the weight biased armature **29** of an electric relay **30**, to one end of which armature the upper end of the rocking bracket is operatively connected by means of a resilient connecting lever **31**. When the relay is energized to retract its armature, a weighted arm **32**, extending obliquely from the upper end of the rocking bracket **26** will urge the friction wheel **20** into driving relationship with the motor pulley **17**, as shown in Fig. 4. Automatic switches **33** and **34**, which are alternately operated by the cams **35** and **36**, respectively mounted on the transverse shaft **21**, serve to synchronize the operations of the motor M and relay **30** with the manual controlling or actuating switch **37** on the forward or front panel **14**, having a pair of contacts **38** as will be more fully described hereinafter.

Now with reference to the pin elevating and setting up means, which is under the control of this automatic operating mechanism just described, it will be noted that the pins **16** are positively elevated and guided by combined means which engage them at their top and bottom ends to insure prompt removal of felled pins from the alley during play as well as to guide and uniformly return all of the pins to a predetermined arangement upon the alley floor at the termination of each game or frame, or after a strike has been made.

This combined means, designated generally by the reference B, includes a plurality of pins **16**, each of which is loosely supported at its upper end by a length of flexible strand or chain **39** from one end of an intermediately pivoted lever **40**. These levers **40** are each weighted at their opposite ends so as to quickly rock on their pivots and raise the attached pins from the alley, when automatic latching means **41** and **42**, associated with each lever, is released by the felling of the pins when struck by balls propelled from the opposite end of the alley. After the projection of a predetermined number of balls, or after a strike has been made, the sockets in the bottom faces of the pins are entered by a group of rods **43**, which upstand from a slidably mounted elevator frame **44**, as all of the rods are automatically moved up through apertures arranged in predctermined geometrical pattern in the alley

floor, to their uppermost position as indicated in Fig. 1, by the power mechanism A. The elevator frame 44 is thereafter slowly lowered under the control of a dashpot 45 and with it the pins 16 which are allowed to follow the rods 43, with which they are aligned, as the weighted ends of the pivoted levers 40 are simultaneously raised to again bring the cooperating latching means 41 and 42 into locking relationship. The pins are thus guided as they are lowered each to its predetermined position on the alley floor.

At the end of the alley remote from the end where the pins 16 are arranged, as just described, the ball propelling means 17 with the ball control means C are located, which means includes a ball return means, a ball releasing means, a ball elevating means, and a ball transfer and positioning means all working together and with the pin elevating and positioning means B, from the power mechanism A, under the automatic control effected by the sequence operations of the switch 37 and the ball propelling means 17 by an operator, adjacent the panel 14.

The ball propelling means comprises primarily a pivotally mounted, manually shiftable and longitudinally reciprocable gun-like member designated generally at 17. By reference to Fig. 5 it will be seen that the propelling means includes a carriage portion 46 having a longitudinal channel 47 in its inner face 48 which is slidably mounted upon a flat strip or rail 49 that extends transversely of the alley adjacent the forward end thereof and is attached to the frame at its ends. As is particularly shown in Fig. 4 the carriage 46 is held in slidable relation upon the rail 49 by a face or bearing plate 50 attached by machine screws or the like to the inner face of the carriage above and below the channel.

The carriage member 46 is transversely recessed below its upper surface and vertically bored at its center to receive and rigidly support a stub shaft 51 so as to depend into the recess. The inner bored end 52 of the upturned gun-supporting bracket 53 is swivelly mounted on the stub shaft 51 within the recess for horizontal swinging movement thereon relative to the carriage. A locking collar 54 is secured on the lower end of the stub shaft 51 by a set screw 55 to retain the bracket against longitudinal movement upon the shaft. Upon the upper face of the bracket 53 adjacent to and aligned with its swivelled mounting in the recess of the carriage is formed the upstanding base or body portion 56 of the ball propelling gun which body is transversely bored through its upper portion to slidably receive and support the tubular gun barrel 57 having a spherical operating handle 58 closing its outer or forward end and a thickened wall portion 59 closing its inner end. A relatively small bore 60 is formed in the thickened wall 59 in alignment with the axis of the gun barrel to slidably receive the ball propelling pin or plunger 61. An enlarged piston-like head 62 formed on the forward end of the plunger 61 is slidably mounted within the tubular gun barrel 57 between which and the operating handle 58 a coiled compression spring 63 is confined. Above the thickened end wall 59 and its plunger 61 the upper body portion 56 is vertically slotted with the slot 64 extending into and communicating with the interior of the body bore adjacent the forward end of the thickened wall portion of the gun barrel. Aligned with the slot 64 in the body 56 is a similar slot 65 formed in the upper wall of the tubular barrel 57 which latter slot extends



longitudinally of the barrel from the thickened end wall to a point 66 determined by the extent of inward sliding movement of the barrel which is necessary in order to produce the desired compression of the spring for propelling a ball along the alley 15.

A trigger mechanism comprising a bell-crank-shaped latching element 67 is intermediately pivoted within the vertical slot 64 in the body member 56 and springpressed at one side so that its lower end will be yieldably extended through the slot 65 in the barrel 57 and releasably engage and normally hold the inner upper end portion of the piston head 62 of the plunger 61 against the action of the spring 63 while the opposite trigger acting end portion of the latch extends upwardly beyond the slotted body. The upper trigger acting end portion of the latch member 67 thus projects into the path of a horizontally extending tripping rod 68 which is threaded into the upper inner face of an abutment plate 69 fixed to the gun barrel so as to move therewith whenever pressure is exerted on the spherical outer end thereof.

While shifting, aiming and discharging of the ball propelling gun member 17 as described, may be accomplished with one hand by the spherical handle end portion 58 of the barrel 57, more accurate training of the gun may be effected by concurrently shifting and holding the carriage with the other hand by manual rotation of a knurled knob 70 on the outer end of the shaft 71. In order to transmit the desired transverse sliding movement to the carriage from the shaft 71 an arm 72 is rotatable with the shaft and has a pivoted link connection 73 with one end of the carriage.

After a ball is propelled down the alley 15 by the mechanism just described it will be returned by gravity to the forward end portion of the apparatus by an inclined chute or runway 74, at one side of the alley, in which the returned balls remain stored until dispensed for use.

As shown particularly in Figs. 7, 8, 9 and 10, the forward end portion of the inclined chute 74 communicates with a specially constructed ball holding and dispensing means 75 the body of which includes an enclosed chute 76 extending as a continuation of the runway 74. The forward lower end of the chute 76 is open and the forward end surface portion of the body of the dispensing means adjoining the open-ended chute is upwardly and rearwardly curved to provide a ball elevating trackway 77, the upper end of which adjoins the upper end of a transversely inclined ball transfer chute 78, which overlies and discharges into the upper elongated grooved surface portion 79, of the gun carriage 46.

By particular reference to Fig. 2, it will be noted that irrespective of the extent to which the carriage 46 is laterally shifted or adjusted by the gun handle 58, or the knurled knob 70, in the normal operation of the game, as indicated by the laterally spaced dot and dash lines 58', the extended upper grooved surface portion or track 79 of the carriage will always underlie the discharge end of the transfer chute 78, to receive balls therefrom. Hence as balls are successively elevated by the cupped end 80, of the ball elevating arm of the bell-crank lever 25, they will always be delivered to the center of the carriage 46 and against the stop 81 in alignment with the axis of the gun barrel 57, and its propelling plunger 61, no matter to what angular extent the gun barrel may be swung at the time, upon its

pivotal support 51. A ball delivered to the carriage and ready for play is thus supported by the carriage 46 immediately above the axis of the depending gun swivelling stub shaft 51 and adjacent the forward edge of the alley floor 15, where it is held against accidental displacement during the adjustment of the gun and the gun carriage by an upwardly swinging bell crank shaped holding finger 82 pivotally mounted in a bracket upstanding from the carriage 46. The depending arm portion 82' of the ball holding finger 82 extends along the forward upper edge toward one end portion of the carriage 46, as is shown in Fig. 4, so that it may be engaged by a reciprocatable bar 82'' in any adjusted position of the carriage to swing the ball holding finger 82 about its pivot in the bracket, when the ball propelling means 17 is operated to project the ball.

As the forward end of the chute 76 is only closed by the ball elevating cup 80, when the elevator arm 25 is in its lowermost position, as shown in Figs. 7 to 10 inclusive, ball dispensing stop means is provided to ensure the timed delivery of but one ball at a time to the cup 80 and at all other times to stop and retain the remaining balls stored in line within the chutes 74 and 76. The ball stop means shown also in Fig. 11 comprises a pair of similar arms 83 and 84 which are independently pivotally mounted at their inner ends upon a shaft 85 extending transversely beneath the chute 76 adjacent its juncture with the runway 74. Independent coil springs 86 and 87 depending from opposite sides of the body of the dispensing means 75 are operatively connected respectively to the stop arms 83 and 84 so as to normally retain the forward upturned free end portions thereof within a pair of parallel slots in the lower wall of the chute 76, at its open end, and with the upturned free ends projecting up into the path of the balls in the chute. As is shown particularly in Fig. 9, the upturned ball engaging end of the arm 84 is of greater width or extent than the corresponding stop portion of the other arm 83 so that it projects forwardly beyond the open end of the chute and into the path of the cupped end 80, of the ball elevator 25, to be engaged thereby and depressed below the lower wall of the chute 76 when the cup is in its lowermost position to receive a ball from the chute. The ball stop 84 is thus always lowered out of the path of the balls within the chute 76 when the elevator 25 is in its lowermost position, as shown in Figs. 7, 9 and 10. The other ball stop 83, which is not affected by movement of the elevator 25, and its cupped end 80, will therefore normally operate to prevent the dispensing of balls from the chute, to the cup 80 as shown in Fig. 9, unless this stop 83 is also lowered out of the path of the balls by positively operated means 88 under the automatic control of the ball propelling gun 17, later to be described.

To insure ejection of balls from the cupped end 80, of the elevator 25, when raised to the upper end of the ball elevating trackway 77, an elongated spring biased ball feeding finger 89, pivoted on a bracket at its lower end above the lower central portion of the trackway so that its free end normally rests on the upper end of the trackway, is adapted to enter a slot 90 in the rear and lower faces of the cup 80 to occupy a position beneath a ball, as indicated in Fig. 8. Return or lowering movement of the elevator lever 25 is checked and controlled by a suitable dashpot 91 and connecting arm 92 until stop 93 is encountered.



While the game apparatus with the mechanism and means generally described may be played more or less continuously it is desirable to incorporate therewith automatic means which will be operative upon the projection of each ball and and also after the projection of a predetermined number of balls, by the propelling means 17, to lock the mechanism until reset for further play. For this latter purpose the mechanism may be controlled in a manner similar to other well known coin operated game mechanisms, wherein a coin must first be inserted into a customary slide device, which when then operated, will unlock the mechanism and set the same for another period of play, at the termination of which period, the mechanism is again locked until another coin is inserted and the coin slide again operated. The mechanism which is under the control of the coin receiving and actuating means to control the delivery of balls for play will therefore be described in detail in connection with the ball delivery and propelling means A.

By reference to Figs. 2 and 3, the coin slide plate 94 projects forwardly from the front panel 14, and is adapted to receive a coin within the cutout portion 95 thereof. With a coin held in the cutout portion, the plate 94 may be pushed into the casing through the panel 14, so as to engage an upstanding pin 96 of the slidable operating member 97, sliding the member 97 on the fixed support 98 into engagement with a horizontally extending pin 99 on a swingable substantially T-shaped cam member 100 which is pivotally supported at its lower end on a stub shaft 101, to a depending portion of the fixed support 98.

This operation of the slide plate 94 with a coin causes the swingable cam member 100 to move in a counter-clockwise direction about its pivot 101 effecting engagement of the cam with a follower roller 102 on the arm 103, which in turn transmits a generally clockwise motion through the shaft 104 to the arm 105 pivotally connected to the upper end of the vertically depending operating member 106. The operating member 106 is thus caused to move upward with the arm 105 carrying with it the generally horizontally disposed locking bar 107 by reason of the hook-shaped notch formation 108 formed in one edge of the operating member which is adapted to engage a pin 109 which projects laterally from the bar 107.

The locking bar 107 is pivoted intermediate its ends on a pin 110 fixed to a bracket 111 extending from the frame. Upward movement of the operating member 106 with the pin 109 engaged by the hook-shaped notch 108, will cause rotation of the locking bar 107 in a counter clockwise direction about its pivotal mounting 110 and thereby disengaging its stepped forward end portion 112 from abutting relation with a locking pin 113 laterally projecting from the lower end portion of the main intermediately pivoted control lever 114, which is shown in locked inwardly inclined position in Fig. 3. When the locking bar 107 is thus rotated on its pivotal mounting 110 a further locking pin 115, projecting laterally from the bar is lifted vertically from one of the radial slots 116 in the periphery of a counting and locking wheel 117 rotatably mounted on a stub shaft 118, so that the wheel 117 is then free to rotate with the pin 115 supported on the periphery of the wheel 117 and the locking bar 107 held up by its pin 115 out of registration with the pin 113.

The now released control lever 114 is free to move about its pivotal connection 119 on the frame, under the influence of spring 120, to assume a generally vertical position, as shown in Fig. 1 (see also the full and dotted line positions of the lever 114 in Fig. 7). A tension spring 121 is also connected at one end to the depending end portion of the swingable operating member 106 and at its opposite end to the frame so as to exert a downward and forward tension on the member 106 to urge it to rotate in a generally counter-clockwise direction on its pivotal connection with the arm 105 to hold the notched edge 108 of the member in engagement with the pin 109 of the locking bar.

With the intermediately pivoted locking bar 107 rocked to allow the main control lever 114 to assume a generally vertical operative position for manually operating the game mechanism, the inner free end of the bar 107 is moved downwardly closing the electric switch 122 in the circuit between the manual control switch 37 and the automatic cam control switches 33 and 34, see Figs. 3, 6 and 7. The radial slots 116 in the counting and locking wheel 117 are spaced around the periphery thereof an angular distance equal to the angle through which the wheel rotates during the playing of a normal game of five frames or the projection of ten balls by the ball propelling gun 17. At the completion of five frames or the normal game for which the counting wheel 117 is designed, the locking pin 115 drops into a slot 116, thus allowing the locking bar 107 to rotate and open the switch 122. Opening of the switch 122 terminates play until the insertion of another coin or token and actuation of the coin slide 94.

The manual control of the game apparatus having thus been established the operating switch 37 is first depressed to close the circuit to the motor M and clutch operating relay 30 to cause the cam shaft 21 to make a half revolution and rock the ball elevating crank arm 25 on its pivot 123 to deliver the first ball, which is always in the ball carrying cup 80 at the forward free end of the crank arm 25 at the termination of a game when the parts are moved into the locked position shown in full lines in Figs. 3 and 7.

At this time, the main control lever 114 has assumed a generally vertical, operative position with its horizontal cross bar 124 adjacent to the inner face of the abutment plate 69, mounted on and movable with the reciprocatable barrel 57 of the ball propelling gun member 17, and the first ball, indicated at 125, in Figs. 2 and 3, is in position in front of the gun member, after having been elevated to the transfer trough 78 as shown in Fig. 8.

Hence when the rounded handle end 58, of the ball propelling gun 17, is pushed inwardly to its full extent to compress the ball propelling spring 63 within the gun barrel 57, and the abutment plate 69 carried by the gun barrel engages the horizontal cross bar 124 of the main control lever 114 moving the upper end of the control lever inwardly about its pivotal mounting 119 against the action of the tension spring 120, the lower end of the control lever 114 is moved outward toward the inner face of the panel 14 and away from the shaft 118. At this time the cam face 126 on the lower end of the main control lever 114 engages a roller 127 journalled at the forward end of the arm 128, of the bell crank 129, causing the bell crank to rotate in a clockwise direction on the stub-shaft 118 and carry with it a ratchet wheel 130, also mounted on the shaft,



which frictionally engages one side of the bell crank 129 under the action of an intermediate clutch acting spring, indicated in dotted lines at 131.

It will be understood from the foregoing each inward propelling movement of the gun barrel 57 will cause the control lever 114 to rock on its pivotal mounting 119 and by the cam face 126 to cause rotation of the ratchet wheel 130 in a clockwise direction to an extent equal to one notch of the ratchet wheel. At this time a pawl 132, which is pivotally carried by the adjacent face of the peripherally slotted counting and locking wheel 117 will engage the notched periphery of the ratchet wheel 130 and lock the two wheels together for rotation in the reverse direction when the control lever 114 again returns to vertical position and when the operating mechanism A is actuated to deliver a ball or to receive the pins as the case may be. When the operating mechanism A is thus operated an arm 133 depending from shaft 123 will be swung with the shaft and engage one end of a rod 134 which in turn engages the lower arm of the bell crank 129 to move the bell crank, the ratchet wheel 130 and the locking and counting wheel 117 together in a counter-clockwise direction equivalent to one notch of the ratchet wheel.

Each complete inward movement of the gun barrel 57 will cause the release of the compressed spring 63 to project the ball propelling plunger 61 and also cause the upwardly swinging of the ball holding finger 82 by means of the pivotal connection of the reciprocatable bar 82'' to the upper end portion of the main control lever 114 as shown particularly in Fig. 3.

Although several balls may be supplied to playing position per frame or set up of the pins, two balls are arranged to be supplied for each said frame. Therefore one complete rotation of the shaft 21 effects the operation of the ball elevating mechanism twice, through the two lobe cam 23, and the pin setting up mechanism but once, through the one lobe cam 22. To receive a second ball for play it is first necessary for the operator to press the handle end 58 of the propelling means 17 into the casing to its full extent to project the first delivered ball indicated at 125. This operation, as above explained, rocks the main control lever 114 on its pivotal support 119 to operate the counting and locking out mechanism. At the same time this inward rocking movement of the main control lever 114 also moves the stop operating lever 88 which overlies an operative extension arm 135 of the ball stop member 83, depressing it from the position shown in Fig. 9 to the position shown in Fig. 10 so as to deliver a ball to the cup 80.

When the upper end portion 124 of the main control lever 114 is swung inwardly by the abutment plate 69 of the gun barrel 57, from the normal position of these parts as shown in Figs. 5 and 9, to the extreme inner position of the lever 114 where the gun barrel is discharged as indicated in both dotted lines in Fig. 5, and in full lines in Fig. 10. It will be noted that the operating lever 88 is now moved downwardly to contact and depress the operative extension arm 135 of the stop member 83 and thus lower its forward upturned end below the lower wall of the chute 76 out of the path of the ball stored therein, as is the stop member 84, at that time. A swinging stop latch 136 is pivotally mounted at 137 intermediate its ends on one side of the body of the dispensing means 75 so that its lower end portion

is normally held in abutment with one side of a pin 138 which projects laterally from one side of the operative extension arm 135 by a tension spring 139, the parts being in the position shown in Fig. 9. When the stop operating extension 135 and its pin 138 are momentarily depressed to the full extent shown in Fig. 10 by oscillation of the lever 88, the lower end of the spring biased latch member 136 will be freed from engagement with the side of the pin 138 so as to assume a normally vertical position immediately above the pin and thus prevent return of the ball stop member 83 with the lever 88, such as would prevent proper dispensing of a ball to the elevator cup 80 at this time.

When the power operating mechanism A is again operated in the normal playing of the game by closing the switch 37, the elevator lever 25 and its ball cup 80 will again rise to the position shown in Fig. 8 to deliver a ball to the track portion 79 of the gun carriage 46. During this time however the spring biased ball stop member 84 will quickly rise following the upward movement of the cup 80 and prevent the escape of balls from the open end of the chute. As the cupped end 80 of the lever 25 approaches the upper end of ball trackway 77 it will be caused to engage the inwardly curved upper end portion 140 of the latch member 136, swinging the latch member on its pivotal mounting 137 and against the action of the spring 139 so that its lower end will again free the pin 138 and allow the ball stop member 83 to rise and prevent delivery of the next ball held on by the stop member 84 when the cup member 80 again returns to the lower end of the trackway 77.

Hence if a strike is made by the first ball propelled down the alley 15 in any game, repeated operations of the switch 37 and consequent elevation and lowering movements of the elevator and its ball cup 80, without actuation of the propelling means against the action of the return spring 141, will merely result in the resetting of the pins 16 upon the alley without delivering a further ball to the gun carriage.

From the foregoing it will be understood that a player or operator of the apparatus upon unlocking of same for play by insertion of a coin or otherwise, may have made available to him a number of balls, for example ten balls. For each two pin set ups, one of the available ten balls will be made ready for propulsion by the apparatus as above explained so that the game may be divided into five frames of two balls per frame except when a strike is made in one frame and then only one ball will be delivered for that frame as above explained. Though the operator or player may effect as many pin set ups as desired, one pin set up per frame is all that is necessary. Upon completion of five frames during which the ten balls have been propelled down the alley the apparatus automatically locks itself until another coin is inserted or the machine otherwise unlocked for play. The number of balls made available to the player may be modified and also the number of frames to the game may be varied without departing from the invention. For example the apparatus may be readily redesigned to offer 30 balls to the player and the game comprise ten frames of three balls per frame to be played with one set up per frame.

What is claimed is:

1. A bowling game apparatus including an alley floor, pin re-setting mechanism adjacent one end of the floor, ball propelling means adjacent the other end of the floor and operable to propel a ball along the floor, a ball magazine, means for delivering a ball from said magazine to said propelling means, ball holding and releasing means associated with the magazine and propelling means and actuated by the propelling means for releasing one ball from the magazine to the delivery means on each operation of the propelling means, and power means independent of said propelling means for actuating said delivery means and pin re-setting mechanism upon successive operations of said power means, whereby the pin re-setting mechanism may be operated to reset the pins after a strike without delivering a ball to said propelling means unless the ball propelling means is again operated.

2. A bowling game apparatus including an alley floor, pin resetting mechanism, ball propelling means, a ball magazine having means for dispensing balls therefrom, means for delivering balls from said magazine to said propelling means, power means common to the pin resetting mechanism and ball delivery means, said power means being operative upon each cycle of operation thereof to actuate the ball delivery means and operative upon alternate cycles of movement thereof to actuate the pin resetting mechanism, and means operated by the propelling means for dispensing balls from the magazine to the delivery means upon the completion of a cycle of operation of the delivering means.

3. A bowling game apparatus including pin resetting mechanism, ball propelling means, means for returning and delivering balls from the resetting mechanism to the propelling means, power means common to said mechanism and second means, means associated with and operative upon successive operations of said first two means for delivering balls to said propelling means, and means operable upon predetermined successive operations of said first two means for preventing further operation by the power means.

4. A bowling game apparatus comprising an alley floor, pin resetting mechanism adjacent one end of the floor, ball propelling means adjacent the other end of the floor, a ball return magazine extending from a point adjacent the pin resetting mechanism to a point adjacent and below the propelling means, means associated with the magazine and ball propelling means for releasing returned balls from the magazine upon operation of the propelling means, means normally positioned adjacent the releasing means for successively receiving a ball and delivering same to said propelling means, power means including a rotatable shaft, and means cooperating with the shaft for operating said receiving and delivering means twice and said pin resetting mechanism once upon each complete rotation thereof.

5. A bowling game apparatus comprising an alley floor, pin resetting mechanism adjacent one end of the floor, ball propelling means adjacent the other end of the floor, a ball return magazine having a discharge opening adjacent and below the propelling means, ball returning and releasing means supported by said magazine adjacent the discharge opening thereof, means for delivering balls to said propelling means when released from said magazine, a control lever operable by said propelling means, power means for actuating said ball delivering means and said pin resetting mechanism, and means movable with said control lever and ball delivering means for successive operation of said ball release

means for effecting release of a ball from the magazine and to said delivering means.

6. A bowling game apparatus according to claim 5, wherein said propelling means includes a carriage, having ball retaining means thereon, and means operable by the control lever for releasing said retaining means immediately preceding the propulsion of the ball.

7. A bowling game apparatus according to claim 5, together with a rotatable counting and locking wheel, means jointly operable by the control lever and ball delivery means for rotating said wheel in successive steps, and means controlled by said wheel for rendering said power means inoperative and for locking said control lever in inoperative position after a predetermined number of successive operations of said ball delivering means and control lever.

8. A bowling game apparatus according to claim 5, wherein said ball release means comprises a pair of pivotally mounted arms having upturned free ends normally maintained in slots in the bottom wall of the magazine at its discharge opening, springs connected with said arms for yieldably maintaining them in ball blocking positions, and means carried by the arms for engagement by said means movable with said control and said ball delivering means.

9. In a game apparatus including an alley floor with means at the rear end thereof for supporting a plurality of pins and a ball return trough adjacent the alley floor, a ball projector at the forward end of the alley, supporting means for the projector comprising a carriage, means mounting the carriage for sliding movement transversely of the alley floor and adjacent the forward end thereof, means pivotally connecting the ball projector to the carriage so that it may be swung laterally with respect to the carriage about the pivotal connection therewith, and means for delivering a ball from said trough to projecting supported position on said carriage vertically above said pivotal connection in all slidable positions of said carriage.

10. In a game apparatus according to claim 9, together with a shaft rotatably supported below said projector, a manipulating member on said shaft, and a link connection between said shaft and said carriage for imparting sliding movement thereto upon rotation of the shaft through manipulation of said member.

11. In a game apparatus including a bowling alley floor, ball propelling and directing means adjacent one end of the floor, a plurality of pins adapted to be vertically arranged on the floor adjacent the opposite end thereof, means extending longitudinally of the alley for returning balls from one end thereof to the other, means for laterally and angularly adjusting the direction of the ball directing means with respect to the pins, means associated with the ball return means and propelling means for delivering a ball to said directing means in all of its laterally and angularly adjusted positions, power means under the control of an operator for resetting said pins and concurrently operating said last mentioned means to deliver a ball to the directing means from the returning means, and means associated with said returning means, delivery means and propelling means for delivering a ball from the returning means to the delivery means upon actuation of the propelling means.

12. A bowling game apparatus comprising an alley floor, a ball return magazine having a discharge end adjacent the forward end of the floor,



a ball holding and dispensing means connected with t' e magazine and including a chute communicating with said magazine, said ball holding and dispensing means including arms for normally retaining balls in the chute, an arcuate trackway carried by said ball holding and dispensing means, ball propelling means above said holding and dispensing means and including a carriage having ball positioning means, a ball delivering means including a cupped member movable, along said trackway between the discharge end of said chute and said ball positioning means, power means for operating said delivering means, and means sequentially operable by said delivering means and propelling means for actuating said movable arms for successive delivery of balls from said chute to said delivering means.

13. A bowling game apparatus according to claim 12, together with a spring biased latching member normally holding one of the said movable arms in ball releasing position, said latching member having a curved end portion engageable by said cupped member upon delivery of a ball to said positioning means for releasing said one of said arms for movement to ball retaining position under the action of spring means connected therewith.

14. A bowling game apparatus comprising an alley floor, a pin resetting mechanism adjacent the rear end of the floor, a ball return magazine extending from a point adjacent the pin resetting mechanism to a point adjacent and below the front end of the floor, ball holding and dispensing means adjacent the front end of the magazine, ball propelling means adjacent the front end of the floor and above said ball holding and dispensing means, ball delivery means for successively delivering balls from the ball holding and dispensing means to the ball propelling means, switch controlled power means for jointly operating said pin resetting mechanism and said ball delivering means, a control lever associated with said ball holding and dispensing means and propelling means and operable by said ball propelling means, means to deliver a ball to the ball delivery means for normally locking said control lever in inoperative position with the switch for said power means open, and manually controlled means operative on said locking means for simultaneously rendering said control lever operative and closing the switch for operation of said power means.

15. A bowling game apparatus according to claim 14, wherein said ball propelling means comprises a carriage having ball positioning means thereon, and means carried by said control lever for releasing said ball positioning means upon movement of said control lever by said ball propelling means.

16. A bowling game apparatus according to claim 14 wherein said locking means comprises a counting wheel jointly operative by said control lever and said ball delivering means, uniformly spaced notches in said wheel, a two-armed lever, one arm of which is provided with a pin for engagement in one of said notches in the locked position of said control lever, a pin carried by said control lever and engageable by a shoulder on said one lever arm when in locked position, a second pin on said one lever arm, a swingable manually elevated unlocking member having a shoulder engageable with said last pin for lifting said first pin out of a notch thereby releasing the pin on the control lever from engagement with the shoulder on said one lever

arm, the other arm of said two armed lever being operative to close said power means switch upon release of said first arm by said swingable control member.

17. A bowling game apparatus according to claim 14 wherein said power means comprises a motor driven shaft, a single lobe cam on one end of the shaft, a double lobe cam on the other end of the shaft, driving connections respectively operable by said cams and connected with said pin resetting mechanism and said ball delivering means, a relay controlled drive between said motor and shaft, and cams on said shaft alternately operate on switches for synchronizing the operations of the motor relay and a main motor control switch.

18. A bowling game apparatus according to claim 14, wherein said ball propelling means comprises a laterally movable ball receiving carriage, and a linearly movable ball projector having a vertical pivotal connection with the carriage for projection of a ball laterally of or at an angle to the longitudinal center of said alley floor.

19. In a bowling game apparatus including a bowling alley floor, means operative to condition said apparatus for play including a control circuit, a plurality of bowling pins adapted to be vertically arranged on the floor adjacent one end thereof, pin setting mechanism constructed and arranged to set said pins in vertical arrangement and in a geometrical pattern on said floor, ball propelling means adjacent the opposite end of said floor and operable to propel a ball along said floor toward said pins, means operative to deliver balls one at a time to said propelling means, means operatively connected between said propelling means and said ball delivering means and operative in response to operation of said propelling means to control the operation of said delivering means, and means operatively connected between said ball propelling means and said control circuit and operative in response to a predetermined number of ball propelling operations to terminate the playable condition of said apparatus by rendering said control circuit inoperative.

20. In a bowling game apparatus including a bowling alley floor, means operative to condition said apparatus for play including a control circuit, a plurality of bowling pins adapted to be vertically arranged on the floor adjacent one end thereof, electrically operated pin setting mechanism constructed and arranged to set said pins in vertical arrangement and in a geometrical pattern on said floor, ball propelling means adjacent the opposite end of said floor and operable to propel a ball along said floor toward said pins, electrically operated means to deliver balls one at a time to said propelling means, means operatively connected between said propelling means and said ball delivering means and operative in response to operation of said propelling means to control the operation of said delivering means, and means operatively connected between said ball propelling means and said control circuit and operative in response to a predetermined number of ball propelling operations to terminate the playable condition of said apparatus by rendering said control circuit inoperative.

CHARLES W. HARTWIG.