April 25, 1950 C. R. ATHY ET AL 2,505,087

PORTABLE DERRICK STRUCTURE

Filed Feb. 17, 1945 3 Sheets-Sheet 1

Fig. 1.

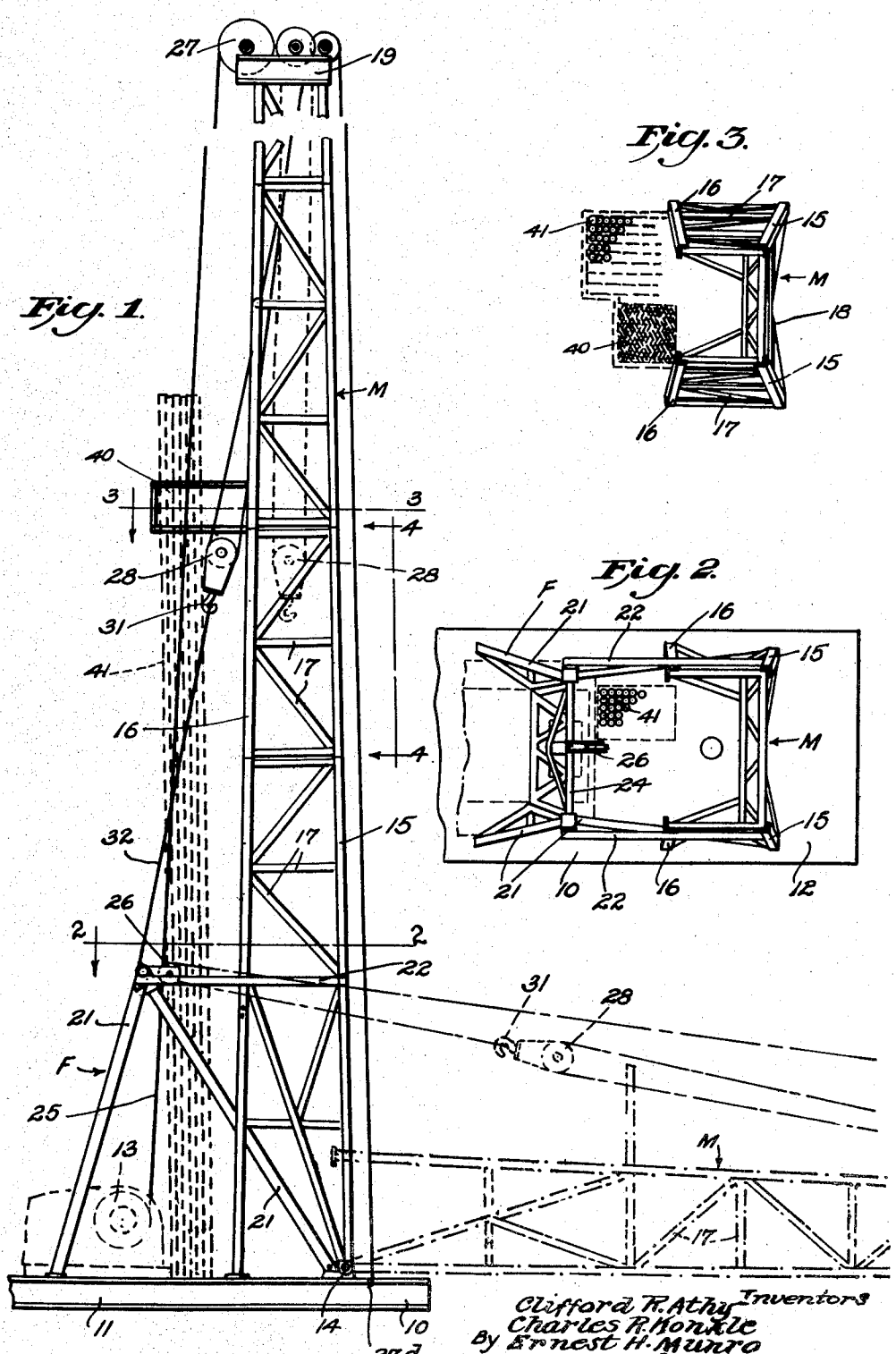

Fig. 3.

Fig. 2.

Clifford R. Athy Inventors
Charles R. Monkle
By Ernest H. Munro
H. A. McKowell Attorney

PORTABLE DERRICK STRUCTURE

Filed Feb. 17, 1945 3 Sheets-Sheet 2

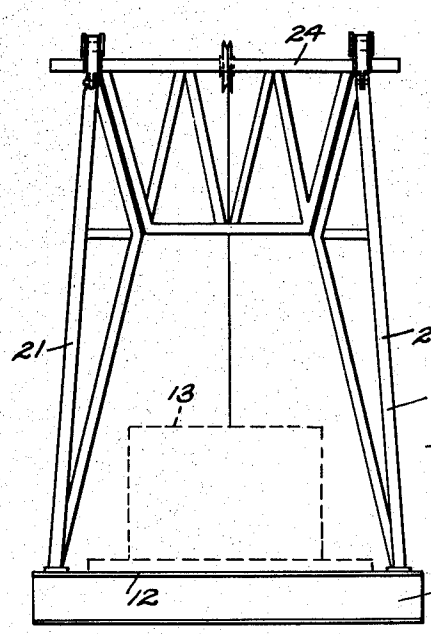

Fig. 4.

Fig. 6.

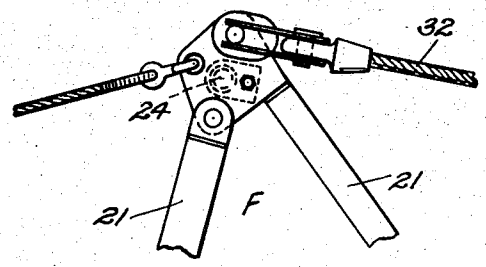

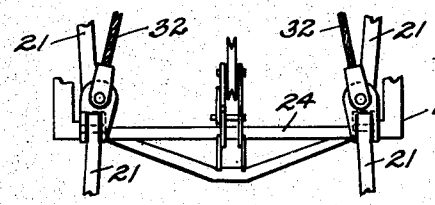

Fig. 5.

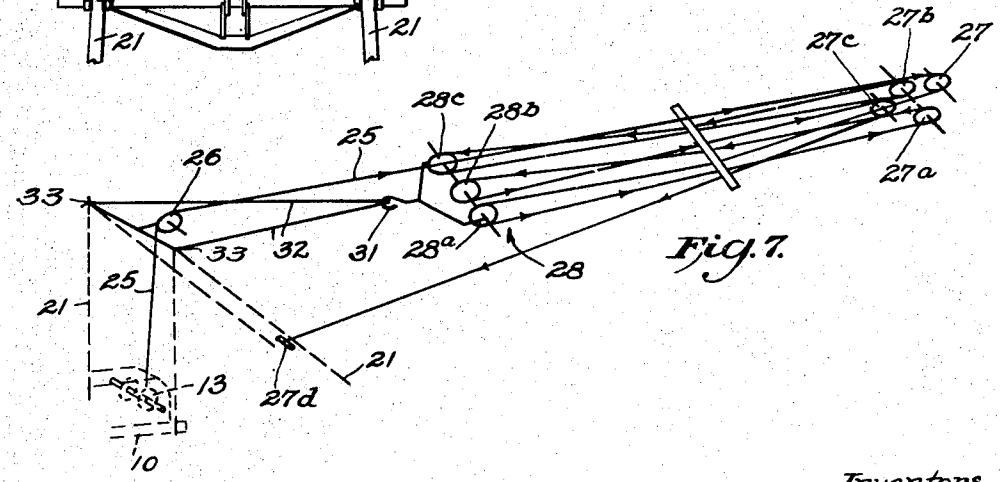

Fig. 7.

Inventors
Clifford R. Athy
Charles R. Konkle
Ernest H. Munro
By H. S. McClowell
Attorney

April 25, 1950 C. R. ATHY ET AL 2,505,087

PORTABLE DERRICK STRUCTURE

Filed Feb. 17, 1945 3 Sheets-Sheet 3

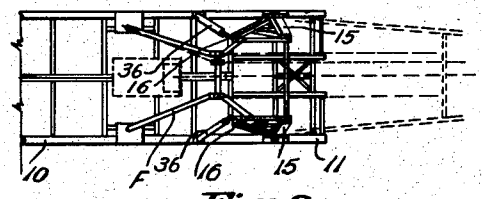

Fig. 8.

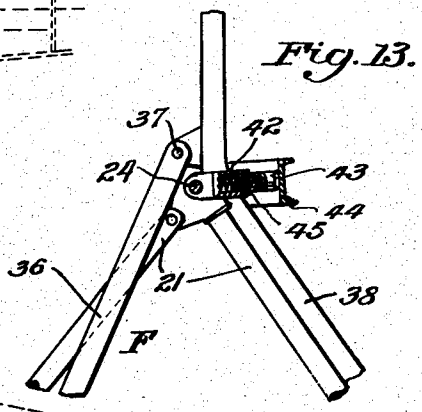

Fig. 13.

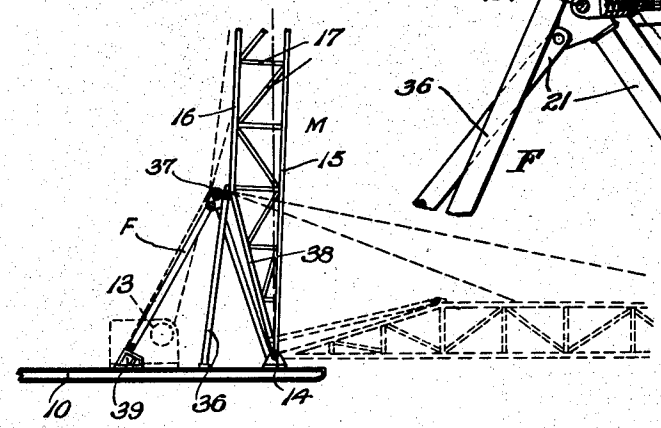

Fig. 9.

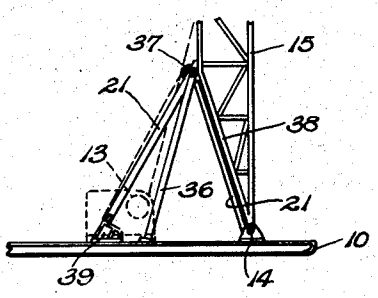

Fig. 10.

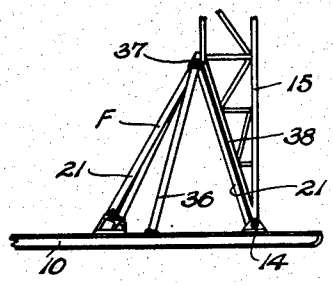

Fig. 11.

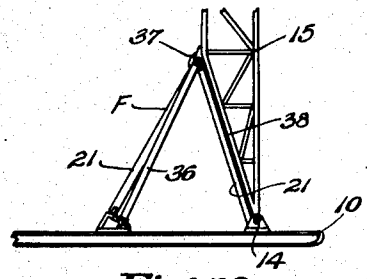

Fig. 12.

Inventors

Clifford R. Athy
Charles R. Konkle
Ernest H. Munro

By H. S. McCaswell
Attorney

Patented Apr. 25, 1950 2,505,087

UNITED STATES PATENT OFFICE

2,505,087

PORTABLE DERRICK STRUCTURE

Clifford R. Athy, Charles R. Konkle, and Ernest H. Munro, Columbus, Ohio, assignors to International Derrick & Equipment Company, Columbus, Ohio, a corporation of Ohio

Application February 17, 1945, Serial No. 578,528

2 Claims. (Cl. 189—15)

1

This invention relates to well derricks, and has particular reference to well derricks of the portable type which are adapted for bodily transference, with a minimum of dismantlement, from one working location to another.

Such portable derricks, as heretofore proposed or constructed, provide a portable base member upon which the derrick mast or frame is pivoted for swinging movement between prone or horizontal positions of transport, substantially parallel with the ground, and upright positions of active operation substantially perpendicular to the ground. In such prior structures, considerable difficulty has been encountered in providing reliable and readily controlled means for conveniently and safely swinging the derrick mast between its prone and upright positions, particularly when the derrick mast is of large size, weight and structural strength to comply with practical conditions in the raising and lowering of strings of drill pipe or casing. Also, when in its prone position, the base of the derrick must possess a vertical measurement within the limits of vehicles traveling over public highways.

Accordingly, it is an object of the invention to provide a well derrick adapted for pivotal mounting on a portable base unit and wherein improved means, carried by the base unit, are provided for imparting regulated movement to the derrick to effect swinging movement thereof about its pivotal mounting.

It is another object to provide a portable derrick of this character in which the portable base is provided with an upstanding mast-raising and lowering frame, arranged over the rotary draw works or cable drum mechanism on the base, the said frame constituting a unit which is structurally independent of the load-bearing functions of the derrick mast, the same being provided at its top with a sheave and anchor devices constituting relatively elevated guides for cables used in swinging the mast between active and inactive positions, the cable sheaves and guides being so disposed on the frame as to be in constant engagement with the cooperative cables throughout all positions of swinging movement of the derrick mast.

It is a further object of the invention to construct the derrick mast so that it comprises a complete composite unit which in its upright position is self-sustaining and structurally independent of the frame over which the raising and lowering cables are guided.

Still, a further object of the invention is to provide the widened base portion of the derrick

2

mast, in one of the preferred forms of my invention, with hingedly movable leg members which, when the derrick is in its position of transport, may be collapsed to decrease the height dimension of the mast structure, and which, during the raising of the mast, may be manipulated to snub or regulate mast movement to preclude undue swinging movement thereof as it approaches its upright position.

A further object of the invention is to construct the derrick mast so that in another form of my invention the same has an open side facing toward the rotary draw works on the base unit, in order that when drill pipe or casing is stacked vertically within the confines of the mast, the hoisting operator, or other attendant supervising the derrick operation, will be in a position to observe clearly and unobstructedly the work which is being performed.

Still, a further object of the invention is to provide a novel arrangement of the cable lines employed in raising and lowering the derrick mast.

For a further understanding of the invention, reference is to be had to the following description and the accompanying drawings, wherein:

Fig. 1 is a side elevational view disclosing my improved portable derrick, the derrick mast being shown in full lines in its elevated or active position, and in dotted lines in its lowered or prone position suitable for a transporting operation.

Fig. 2 is a horizontal sectional view taken on the plane indicated by the line 2—2 of Fig. 1;

Fig. 3 is a similar view taken through the mast on the plane indicated by the line 3—3 of Fig. 1 and disclosing the pipe-racking platform;

Fig. 4 is a rear elevational view of the mast-raising and lowering frame;

Fig. 5 is a detail plan view of said frame;

Fig. 6 is a fragmentary enlarged side elevational view of the upper portion of the frame;

Fig. 7 is a diagrammatic perspective view of the cable lines used in the raising and lowering of the mast;

Fig. 8 is a top plan view of a modified form of mast wherein swinging leg members are employed;

Fig. 9 is a side elevational view disclosing one of the working positions of the swinging leg members of the mast as the latter approaches its upright position;

Figs. 10 and 11 are similar views disclosing the leg members in other working positions;

Fig. 12 is a similar view disclosing the positions of the pivoted leg members when the mast is in its final upright working position;

Fig. 13 is a detail view disclosing a modified form of the invention wherein a spring mechanism is used to check the upward movement of the mast.

Referring more particularly to the drawings, the numeral 10 designates the portable base unit for my improved derrick. As shown in the drawings, the base unit is of the sliding or skid type, although it will be understood that wheels may be placed on the same to facilitate its movement when drawn by a truck, tractor or other automotive vehicle. The base unit comprises suitably joined metallic sills 11 and a flooring frame 12. On the latter, there is mounted the usual engine driven rotary draw works of any standard construction. The draw works has not been illustrated in detail except to disclose the power driven cable drum or windlass 13.

Adapted to be pivotally mounted, as at 14, on the base unit 10 are the lower ends of the front legs 15 of a skeletonized structural steel derrick mast M. This mast is adapted to carry its loads through substantially its vertical axis and includes a pair of rearwardly disposed legs 16, which are united with the legs 15 by means of cross braces and diagonal struts 17. Likewise, the front legs 15 are united with each other by corresponding cross braces and struts 18. The back of the mast, that is, the side facing toward the drum 13, is substantially open and devoid of cross braces and struts so that the derrick as a whole is a three-sided pyramidal structure, completely unitary and self-sustaining in an upright position. The open rear face of the mast permits the hoisting operator, who is usually stationed adjacent to the draw works 13, to observe with unobstructed vision the operations which the mast is required to perform. The top of the mast structure is provided with a crown block 19, used in the rotatable support of cable sheaves.

In association with the mast M, use is made of a frame structure F which, because of its configuration, may be termed an A frame. Again, in the industry, this unit is also known as a "gin-pole" frame. The frame F comprises, at each side thereof, a pair of downwardly diverging legs 21, the lower ends of the latter being fastened to the base unit 10. The upper ends of the frame legs 21 carry a horizontally disposed cross member 24. If desired, the upper ends of the rear pair of legs 21 may be pivotally united with the ends of the cross member 24 so that when not in active use, the frame F may be folded or collapsed, in a substantially horizontal position. The frame F is somewhat narower in width than the base portion of the mast end so that, as shown in Fig. 2, when the mast is in an upright position, its lower flared end will straddle the frame F. It will be noted in this connection that the mast M sustains its working loads independently of the frame F, although tie braces 22 may be employed to connect the two units when the mast is raised to assist in the torsional bracing of the assembled structure.

In order to raise and lower the mast M by swinging the same about its pivotal connection 14, use is made of a cable 25, known as the live or variable length line. One end of this line is wrapped around and secured to the drum 13, and from the drum the line extends over the guide sheave 26 carried by the cross member 24 of the A frame, and after passing around this sheave is trained upwardly to sheave 27 of the crown block assembly, after which it is trained downwardly for passage over the sheave 28*a* of a fall block 28. From the sheave 28*a*, the cable 25 is again trained upwardly for passage over a second crown block sheave 27*a* and thence downwardly over a second fall block sheave 28*b*. From this last-named sheave, the cable is trained upwardly for passage over a third crown block sheave 27*b* and thence re-trained downwardly and over a third fall block sheave 28*c*. After passing around the latter, the cable extends upwardly and passes over a fourth crown block sheave 27*c*, the cable being then directed downwardly in order to have its lower end anchored or dead-ended as at 27*d* on the base frame 10.

The fall block 28 includes the usual depending hook 31 which receives the intermediate portion of a sling or constant length line 32. From the hook 31, the line 32 diverges and is passed to spaced anchors 33 carried by the upper part of the frame F at its opposite sides.

With the mast M in its prone position, consideration will disclose that when the drum 13 is rotated to wind one end of the cable 25 thereabout, the resulting shortening of the line 25 applies lifting forces to the derrick. The pull of the line 25 is applied to the fall block 28, but since the latter is held against movement by the constant length line 32, the shortening of the line 25 results in the lifting of the prone derrick mast. As the mast is swung to its vertical position, the lines 25 and 32 remain in constant engagement with their respective guides or sheaves, so that their operation is positive during both raising and lowering of the mast. Said cable lines are composed of twisted strands of wire of appropriate diameter to withstand the considerable strains imposed thereon. However, said lines are compounded to reduce the strains thereon; therefore, unusually heavy cables need not be employed. When the mast is elevated, the same may be united, if desired, with the A frame by means of detachable braces 22.

As shown in Figures 8 to 12, the rear diverging leg-forming members 36 at the bottom of the mast end may be hinged, as at 37, to said mast so that when the derrick is undergoing transport, the hinged leg member may be lowered to extend substantially parallel with the companion leg member 38, thus decreasing the height dimension of the base of the derrick when the same is lowered. As stated, the A frame may be composed of pivotally united leg members which, during transport of the derrick, may be folded to rest on the collapsed leg members 36 and 38. Through this arrangement, the height dimensions of the derrick may be suitably decreased during transport to comply with highway requirements.

Another particular advantage in using the hinged rear leg members 36 is to be found in their use in snubbing the movement of the mast as it is pulled by the cable 25 over its dead center position just before the mast reaches its upright position. Thus, as the mast is raised, the legs 36 are forced back so that their lower ends will engage different positions on the base floor, checking the swing of the mast until it occupies its final upright position. At this time, the lower ends of said legs are detachably fastened to the base-carried shoes 39. By so using the legs 36, the mast may be raised safely without necessarily employing an added snubbing cable or tag line.

Intermediately of its height, the mast preferably carries a pipe racking and working platform 40 by which standard lengths of well pipe

41 may be supported on the base 10 in vertical order for convenient accessibility. The rear edge of this platform, as shown in Fig. 3, is offset to accommodate the line 25 to permit the latter to be employed freely without meeting with obstructions.

As shown, in Fig. 13, the A frame may be provided with one or more housings 42 which receive coil springs of the expansion type, the springs pressing outwardly on plungers 43 which are disposed for engagement with a fixed transverse member 44 carried by the derrick or mast section. The plungers 43 are positioned so that as the mast section reaches substantially an initial upright position during the raising thereof, the plungers are engaged to compress the spring or springs 45, thus checking the motion of the mast section as it settles to its final upright position. A cable may be connected with the mast section to draw it into its final upright position to compress the springs 45 to a greater degree than could be obtained by the weight of the oscillating mast, and hold the springs under such compression. The stored energy in the springs may thus be used to initiate movement of the mast section toward a lowered position upon release of the cable means.

By arranging the rearwardly extending legs of the A frame within the confines of the base of the mast section, when the latter is elevated, the drill pipe shown at 41 may be stacked within the A frame and guided thereby in position to be passed through the open side of the derrick mast. Also, it will be noted that the forwardly extending legs 21 of the frame F are connected with the base sills 10 immediately adjacent to the pivotal mounting 14, minimizing or eliminating bending stresses in the base sills.

We claim:

1. A derrick structure comprising a portable base, a mast section having longitudinally extending front and rear pairs of corner legs rigidly united by a plurality of cross braces and struts forming the front and sides of the mast section, the back of said section being open and devoid of braces and struts throughout at least the greater part of its length, said mast section being stable and self-sustaining when in an upright position

on said base to form an independent unit capable of supporting its working loads substantially along its vertical axis, means pivotally uniting the lower ends of the front pair of said legs to said base to provide for swinging movement of said mast section between prone and upright positions, a gin pole frame mounted on said base adjacent to said mast section, said frame at the top thereof having a horizontally disposed cross member and pairs of downwardly diverging base-engaging legs at the ends of said cross member, the location of said frame on said base being such that the cross member at the top thereof is rearwardly spaced from the rear legs and open back of said mast section to form a drill pipe receiving enclosure therewith, torsion-transmitting braces rigidly uniting the upper part of said frame with an intermediate portion of said mast section when the latter occupies its upright position, and power-actuated cable means carried by said base and cooperative with said frame and derrick section to raise and lower the latter through its swinging movement about the pivotal connection thereof with said base.

2. The structure set forth in claim 1 in which the front legs of the gin pole frame have their lower ends secured to the base in positions immediately adjacent to the means pivotally uniting the lower ends of the front pair of legs of the mast section to said base, whereby bending stresses in the base are minimized.

CLIFFORD R. ATHY.
CHARLES R. KONKLE.
ERNEST H. MUNRO.

REFERENCES CITED

The following references are of record in the file of this patent:

UNITED STATES PATENTS

Number	Name	Date
2,271,578	Woolslayer et al.	Feb. 3, 1942
2,332,479	Woolslayer et al.	Oct. 19, 1943
2,345,253	Funk	Mar. 28, 1944
2,354,922	McEwen et al.	Aug. 1, 1944
2,403,080	Hilborn	July 2, 1946
2,403,081	Hilborn	July 2, 1946