May 18, 1943 W. W. DRINKARD 2,319,493

RETRACTIBLE FORMATION SEALING TOOL

Filed May 20, 1940 2 Sheets-Sheet 1

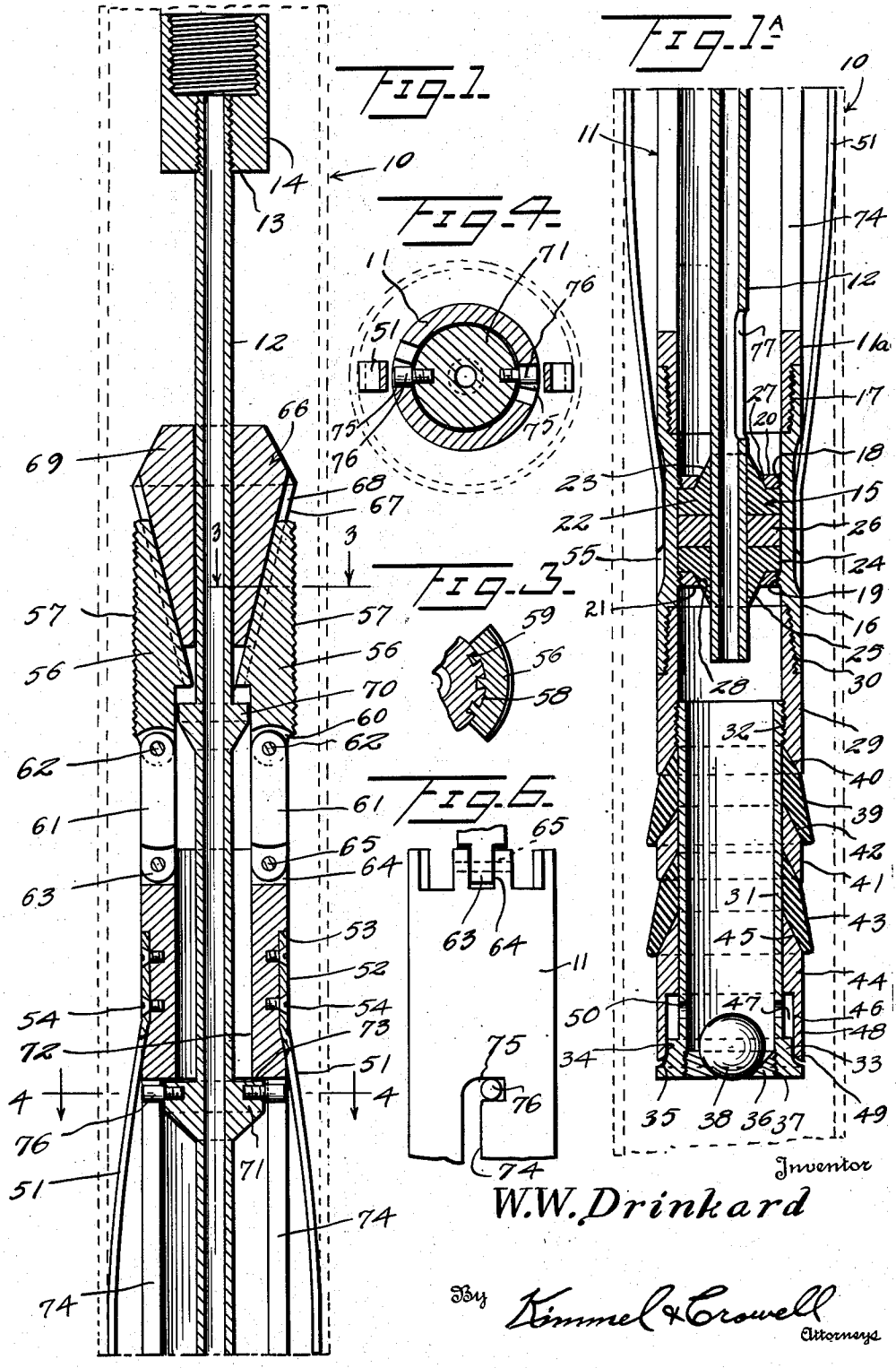

May 18, 1943 W. W. DRINKARD 2,319,493

RETRACTIBLE FORMATION SEALING TOOL

Filed May 20, 1940 2 Sheets-Sheet 2

Fig. 2.

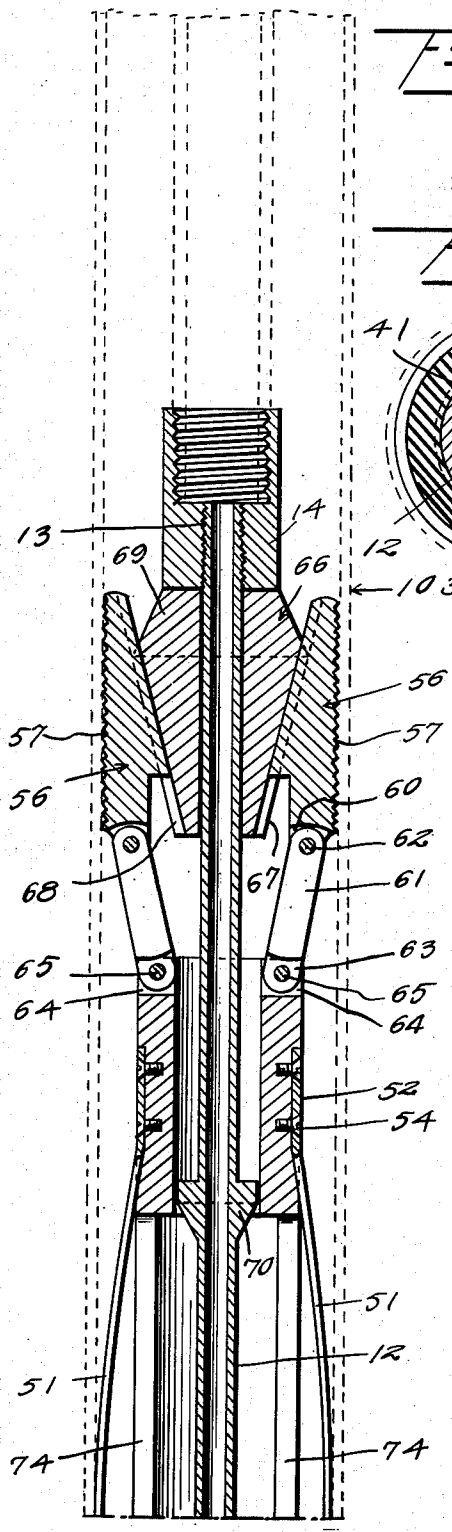

Fig. 5.

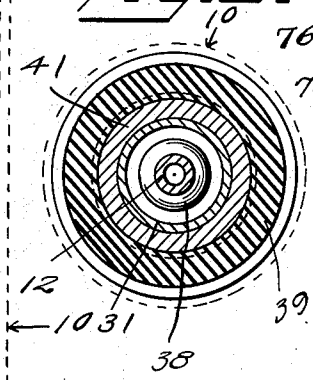

Fig. 2B.

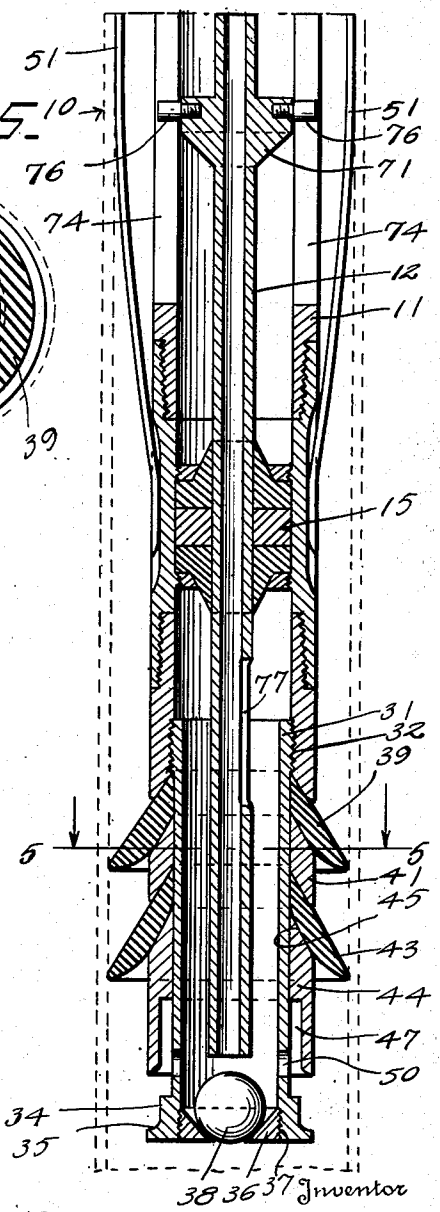

Inventor

W. W. Drinkard

By Kimmel & Crowell

Attorneys

Patented May 18, 1943 2,319,493

UNITED STATES PATENT OFFICE

2,319,493

RETRACTABLE FORMATION SEALING TOOL

Woodrow Wilson Drinkard, Longview, Tex.

Application May 20, 1940, Serial No. 336,254

18 Claims. (Cl. 166—12)

This invention relates to well cementing apparatus and more particularly to a device for insertion in a well casing to permit the discharge of liquid cement into the formation surrounding the well bore, for repressuring the formation or discharging any selected fluid into the formation.

An object of this invention is to provide a device of this kind which may be locked from the surface of the ground at any desired point in the well casing and which may be reset as many times as desired at different points in the casing.

Another object of this invention is to provide a structure of this kind which will provide for the initial discharge of fluid cement or other material in the bore or formation and also permit the removal of excess cement so as to eliminate the necessity of drilling through and destroying a retainer for the cement.

A still further object of this invention is to provide a structure of this kind wherein the fluid material is discharged from the lower end of the tool, thus eliminating any projecting parts below the tool and permitting the use of the tool at the extreme bottom of the well bore.

A further object of this invention is to provide a structure of this kind wherein the reversing of the circulation of material can be effected without change in position or adjustment of the tubing.

A further object of this invention is to provide a tool of this kind wherein the release thereof is effected by withdrawal of the tool vertically out of the casing.

A further object of this invention is to provide a tool of this kind wherein the tool can be safely removed from the casing after the cementing operation without damage to the tool or casing or detachment of any part thereof, or without affecting the condition of the material inserted into the well casing.

A further object of this invention is to provide a tool of this kind which may be inserted in a dry hole, a gas well hole, or a hole containing liquid, and which is independent in its positioning or release of the presence or absence of hydraulic means.

A further object of this invention is to provide a tool of this kind which is so constructed that when the tool is in set or locked position a portion thereof may be moved relative to the remaining portion and fluid pressure used to assist in the release of the tool, the fluid pressure being applied in the same direction as the flow of material into the casing.

A further object of this invention is to provide a tool of this kind wherein the locking or clamping slips may be moved to a locking or clamping position by partial rotation of one part of the tool relative to another part accompanied by subsequent endwise movement of the rotated part.

A further object of this invention is to provide a tool of this kind formed with a downwardly closing valve and initially opened fluid ports above the valve so that the tool may readily be lowered into a body of liquid in the casing and the fluid ports subsequently closed simultaneously with the setting or locking of the tool at the desired point.

A further object of this invention is to provide a yieldable sealing means adjacent to and slightly above the point of discharge which is held in operative or sealing position by the pressure of the discharging material so as to thereby prevent the fluid material from rising above the desired point.

A further object of this invention is to provide in a tool of this kind, a sealing means which is not only moved to operative or sealing position by pressure of the discharging material, but which will also exert an upward force on the locking slips independent of the downward pressure exerted on the slips by the weight of the tubing so as to apply a locking pressure on the slips in a reverse direction to the discharging material and in proportion to the pressure of the discharging material. In this matter the greater the pressure of the discharging material, the greater the locking or clamping force will be on the slips.

A further object of this invention is to provide a tool of this kind whereby the pressure exerted beneath the packing rubbers, will tend to lift the tubing string and thereby exert additional force on the slips from below so that the slips will firmly grip the well casing and hold the tool in its set position.

A further object of this invention is to provide a tool of this kind with the packing rubbers so arranged and the internal packing gland which is mounted in the body, so attached to the body that only the cross-sectional area of the mandrel at the open lower end thereof is exposed to the direct upward pressure exerted below the tool.

To the foregoing objects and to others which may hereinafter appear, the invention consists of the novel construction, combination and arrangement of parts as will be more specifically referred to and illustrated in the accompanying drawings wherein are shown embodiments of the invention, but it is to be understood that changes,

variations and modifications may be resorted to which fall within the scope of the invention as claimed.

In the drawings:

Figures 1 and 1[a] are a vertical section of a retractable formation cementer constructed according to an embodiment of this invention, showing the tool in unset position, Figure 1[a] being an extension of the lower end of Figure 1.

Figures 2 and 2[b] are sectional views similar to Figure 1 but showing the tool in set or locked position, Figure 2[b] being an extension of the lower end of Figure 2.

Figure 3 is a fragmentary sectional view taken on the line 3—3 of Figure 1.

Figure 4 is a sectional view taken on the line 4—4 of Figure 1.

Figure 5 is a sectional view taken on the line 5—5 of Figure 2[b].

Figure 6 is a fragmentary side elevation of a portion of the tool.

Referring to the drawings, the numeral 10 designates generally a casing which is inserted in a well bore in the conventional manner. In order to provide a means whereby cement or other initially plastic or fluid composition may be injected into the casing 10 or into the formation about the casing 10, I have provided a tubular body or member 11 which is substantially smaller in diameter than the diameter of the casing 10.

A tubular mandrel 12 which is substantially smaller in diameter than the tubular body 11, is disposed concentrically to the body 11 and the upper end of the mandrel 12 is provided with threads 13 engaging in a combined coupling and slip expander operating member 14 which is adapted to be connected to a string of pipe which is extended down through the casing 10 and through which the fluid cement or other fluid composition is adapted to pass. The tubular body 11 comprises an upper section 11[a], an intermediate section 16 and a lower section 29. The mandrel 12 is vertically slidable through a packing generally designated as 15 which is disposed below the tubular body 11. The packing 15 is positioned in the intermediate sections 16 which is of substantially the same diameter as the upper body section 11[a] and the intermediate body 16 is threaded at its upper end 17 onto the lower end of the body section 11[a]. The sleeve or intermediate body 16 is provided with interior threads 18 and 19 extending inwardly from the upper and lower ends respectively of the sleeve 16 and upper and lower lock nuts or rings 20 and 21 engage the threads 18 and 19, respectively, and engage on opposite ends of the packing 15 so as to hold the packing 15 against endwise movement in the sleeve 16.

The packing 15 comprises an upper yieldable annular body 22 which is formed with a frusto-conical extension 23 engaging about the mandrel 12. The packing 15 also comprises a lower annular body 24 formed with a frusto-conical extension or gland member 25 engaging about the mandrel 12. An intermediate ring 26 engages between the yieldable bodies 22 and 23. The clamping rings or nuts 20 and 21 are each provided with tapered inner portions 27 and 28, respectively, which engage the tapered surfaces of the frusto-conical members 23 and 25 so that tightening of the nuts 20 and 21 will not only compress the annular bodies 22 and 24 together but will also press the tapered portions 23 and 25 against the peripheral surface of the tubular mandrel 12.

A lower tubular sleeve 29 extends downwardly from the sleeve 16 and is threaded at its upper end into the sleeve 16 as at 30. The sleeve 29 is of substantially the same diameter as the tubular body 11[a]. A lower sleeve 31 is threaded as at 32 into the lower end of the sleeve 29 and is substantially smaller in diameter than the sleeve 29. The sleeve or extension 31 is provided with a collar or flange 33 at its lower end and this collar or sleeve 33 is formed with a cylindrical guide surface 34 terminating at its lower end in a rounded seat 35. A valve seat 36 is threaded as at 37 into the lower end of the sleeve or valve cage 31 and a spherical valve member 38 is adapted to gravitatingly engage on the seat 36. The valve 38 is adapted to move downwardly to a seat engaging position and is adapted to be moved upwardly to an open position upon pressure from below the valve seat 36.

An annular combined sealing and holding ring 39 is slidable on the exterior of the sleeve or valve cage member 31 and as shown in Figure 1[a], this sealing member 39 is normally inclined downwardly and at its upper end is adapted to engage an inwardly tapered seat 40 carried by the lower end of the sleeve 29. The sealing member 39 is of yieldable composition being formed of rubber or other flexible or pliable material so that the sealing member 39 may be distorted outwardly to the position shown in Figure 2[b]. A sliding ring 41 is loosely mounted on the sleeve or cage 31 below the sealing member 39 and the upper edge of the ring 41 is adapted to engage the lowered inclined face 42 of the sealing member 39 so that when the ring 41 is moved upwardly, the sealing member 39 will be forced outwardly against the inner surface of the casing 10.

A second yieldable sealing member 43 is loosely mounted on the cage or sleeve 31 and is of a configuration similar to that of the sealing member 39 being formed of a substantially frusto-conical configuration in side elevation. An annular combined valve member and seal operating member 44 is disposed below the lower sealing member 42 and is slidable on the sleeve 31. The upper edge of the ring shaped valve member and seal operating member 44 is tapered as at 45 to provide a seal expanding portion and is adapted to engage the inner face of the lower sealing member 41 as shown in Figures 1[a] and 2[b] and move the sealing member to expanded position. The operating member 44 at its lower portion is formed with an enlarged bore 46 which forms with the exterior of the sleeve 31 a pressure chamber 47. The lower edge of the reduced portion 48 formed by the enlarged bore 46 is rounded off as at 49 and is adapted when the combined valve member and seal operator 44 is in a lowered or closed position to engage on the rounded seat 35 of the head 33.

The sleeve or cage member 31 at a point above the seat 36 is formed with a plurality of ports 50 which communicate with the pressure chamber 47. When the fluid is discharged downwardly from the lower end of the mandrel 12 into the cage or sleeve 31, this fluid will flow out through the ports 50 into the pressure chamber 47 and then the pressure of this fluid will raise the valve member and seal operator 44 upwardly until the valve member 44 is in the position shown in Figure 2[b]. In this position the fluid may flow out of the ports 50 into the casing 10 and into the formation about the casing 10 at a point below the lower end of the valve member 44 and below the lowermost sealing member 43.

In order to provide a means whereby the tubular body 11 may be frictionally held against rotation relative to the casing 10, I have provided a plurality of elongated flat springs 51 which are anchored or fixed at their upper ends 52 in recesses 53 formed in the body 11 adjacent the upper end thereof. The springs 51 are secured in the recesses 53 by means of fastening devices 54. The springs 51 are longitudinally bowed so that the convex faces thereof will contact with the inner surface of the casing 10 and thus hold the tool or tubular body 11 concentric to the casing 10. The lower ends of the springs 51 are free and slidably engaged in guide recesses 55 which are formed in the sleeve or coupling member 16.

The tubular body 11 is adapted to be locked or clamped in the selected position within the casing 10 by means of a plurality of slips or clamping members generally designated as 56. In practice there are at least three of these slips 56 which have arcuate outer faces formed with serrations 57 and each slip 56 is formed with a concave inner face 58. The inner faces 58 of each slip 57 is also formed with a plurality of inwardly projecting ribs or keys 59. The slips 56 as shown in Figures 1 and 2 are of tapered construction longitudinally with the larger end thereof lowermost so that when these slips 56 are in assembled position with their outer faces vertical, the inner concave faces 58 will form an inverted socket.

Each slip 56 is formed with a downwardly extending arm 60 which is pivotally connected to the upper end of a link 61 as by a pivot 62. The upper end of the link 61 may be formed with a pair of arms between which the lower end of the arm 60 is adapted to engage. The lower end of each link 61 is formed with an arm 63 engaging in a notch 64 provided in the upper end of the tubular body 11. The arm 63 is pivotally held in the notch 64 by means of a pin or pivot member 65.

A slip expander generally designated as 66 is slidable on the mandrel 12 and the slip expander 66 is formed with an inverted frusto-conical surface 67 which is adapted to slidably engage the arcuate surfaces 58 of the slips 56. The expander 66 on the tapered or frusto-conical surface 67 thereof is formed with a plurality of key ways or grooves 68 in which the keys or ribs 69 slidably engage. The expander 66 is formed at its upper portion with a reduced and upwardly tapered head 69 which is adapted to be engaged by and contact with the coupling member 14 as shown in Figure 2.

In order to provide a means whereby the wedge or expander 66 may be moved upwardly to a released position upon upward movement of the mandrel 12 relative to the body 11, I have provided an annular flange or lower wedge operator 70 which is carried by the mandrel 12 at a point downwardly from the upper end thereof. The flange or operator 70 has a horizontal or flat upper face which is adapted to engage the truncated lower end of the wedge member 66 so as to pull this member 66 upwardly and thus release the slips 56 from the inner surface of the casing 10. In Figure 1 the slip operator 66 is shown spaced above the collar 70. This position of the slip operator may be obtained by manually pulling the operator upwardly on the mandrel 12 before the tool is lowered into the casing. When the slip operator 66 is moved upwardly to a slip retracting position the lower end of the operator will be in contacting relation with respect to the collar 70 and the upper end of the collar 70 will be in contact with the lower ends of the keys 59.

The mandrel 12 at a point downwardly from the operator or collar 70 is formed with a second collar or flange 71 and the collar 71 is preferably of a diameter substantially equal to the inner diameter of the tubular body 11. The body 11 adjacent the upper end thereof is formed with a reduced diameter 72 forming a shoulder 73 against which the upper end of the collar 70 is adapted to engage. The body 11 is formed with a pair of diametrically opposed elongated slots 74 which at their upper ends communicate with a horizontally disposed or lateral slot 75 forming an inverted J-slot. The collar or flange 71 has secured thereto a pair of outwardly extending studs or pins 76 which slidably engage in the J-slot formed by the two slots 74 and 75 and when the pins 76 are in the horizontal portion 75, the mandrel 12 is locked against endwise movement relative to the body 11. When it is desired to move the mandrel 12 downwardly relative to the body 11, the mandrel 12 is given a partial rotary movement to move the pins 76 out of the horizontal slots 75 and in alignment with the vertical slots 74.

The mandrel 12 may then be given endwise or downward movement so as to permit the coupling member or wedge operator 14 to move downwardly into engagement with the head 69 of the wedge or slip expander 66. The mandrel 12 at a point slightly above the lower end thereof is formed with an outlet port 77 and when the mandrel 12 is in a lowermost position, the outlet port 77 is positioned below the packing member 15. When the mandrel 12 is in an uppermost or released position, the port 77 will communicate with the body 11 above the packing 15 so that fluid may flow upwardly past the valve 38 to unseat the valve and then enter the lower open end of the mandrel 12 and be discharged laterally through the port 77 into the body 11. The fluid may then flow laterally and outwardly of the body 11 through the J-slots 74—75 and into the casing 10.

In the use and operation of this tool, the coupling member 14 is threaded onto the lower end of a string of pipe through which the fluid is adapted to be forced downwardly into the well or which may be used as a means for withdrawing fluid from the casing 10 at a point below the tool hereinbefore described. Initially the mandrel 12 is locked by disposing the locking pins or studs 76 in the horizontal portions 75 of the inverted J-slots and at this time the slip expander 66 will be in a position shown in Figure 1 and the mandrel 12 will be in the position shown in Figures 1 and 1a. The entire structure may then be lowered into the well with the springs 51 frictionally engaging the inner surface of the casing 10. When the tool has been lowered to the desired point, the tool may be given a partial rotation so as to remove the locking studs or pins 76 from the horizontal slots 75 whereupon the mandrel 12 with the string of pipe attached thereto may be lowered.

The springs 51 will yieldingly hold the body 11 against rotation relative to the casing 10 so that the mandrel 12 may be rotated to a released position and subsequently lowered without movement of the body 11. When the coupling member or ram 14 engages the head 69 of the slip expander 66, the expander 66 will be forced downwardly and the slips 56 will also be forced laterally and out-

wardly against the inner surface of the casing 10. The serrations or teeth 57 on the slips 56 will bite into the casing 10 and thus hold the slips 56 tightly against the casing 10.

The pressure on the slips 56 may be exerted on the slips from opposite directions. Initially the weight of the tubing connected to the coupling 14 will effect spreading of the slips so that the teeth 57 will bite into the casing 10. In this manner the slips 56 will support the weight of the tubing at the lower end of the tubing. After the material starts discharging through the ports 50 and with the packing or sealing member 39 and 43 in sealed position, the pressure of the fluid material below the sealing members 39 and 43 will exert an upward force on these sealing members. This upward force on the sealing members 39 and 43 will tend to also force the body 11 and the slips 56 upwardly against the downward and lateral force exerted on the slips 56 by the weight of the tubing. As the pressure on opposite sides of the valve 38 is equalized this valve will stay in closed position.

In this manner if the weight of the tubing is such that the downward pressure exerted on the slips is not sufficient to lock the slips against movement, the pressure exerted from below the tool will exert sufficient upward pressure on the slips 56 to cause the slips to be firmly locked to the casing 10. It will, therefore, be apparent that the degree of locking force of the slips 56 is not dependent upon the weight of the tubing or the downward pressure exerted on the wedge 66, as in the event the tubing weight will not lock the slips, the upward force of the fluid pressure will exert sufficient increased pressure on the slips 56 to cause the slips to move upward and outward until the teeth 57 finally lock the slips 56 against the casing 10.

When the mandrel 12 is lowered to the position shown in Figures 2 and 2b, the fluid material may then be forced downwardly for discharge out of the mandrel 12 and also out of the port 77 which at this time is positioned below the packing member or guide 15. The pressure of the discharged fluid from the mandrel 12 will be communicated through the ports 50 to the pressure chamber 47 and the pressure of the fluid in the chamber 47 will raise the combined valve and sleeve 44 upwardly so as to expand the two sealing members 39 and 43 against the inner surface of the casing 10. When the combined seal operator and valve member 44 is moved upwardly by the pressure of the fluid to the position shown in Figure 2b, the fluid material may be discharged into the casing 10 below. the lowermost of the sealing members 43. The outlet ports 50 are positioned closely adjacent the lower end of the valve cage or sleeve 31 so that there will not be any substantial length of the tool projecting below the point of discharge of the material into the casing 10. It will also be understood that the pressure of the fluid material in the casing 10 about the valve member 44 will have a tendency to expand the lowermost sealing member 43 and maintain this member 43 in an expanding position so long as this pressure exists.

In the event it is desired to reverse the flow of the material so as to force out the excess material, this may be done in one of two ways. First: The mandrel 12 may be left in its discharging position, which is the position shown in Figure 2b, The fluid material is then pumped down inside the casing 10 from the surface outside the mandrel 12 and will flow past the locked slips 56. The inverted J-slots 74—75 being open the material will enter the body 11 above the gland 15, but as the port 77 is at this time below the gland 15, the material cannot enter the mandrel 12 above the gland 15. The fluid material, such as water, gas or the like will move downwardly outside of the body 11 and force the sealing members 39 and 43 to contract and move downwardly to inoperative position. The valve 44 will likewise move downwardly to close the ports 50 but the pressure of the fluid will unseat the valve 38 and permit the fluid to flow upwardly into the cage 31. The lower end of the mandrel 12 being open and within the cage 31 and the port 77 being below the gland 15 the fluid will flow upwardly in the mandrel 12.

Second: The mandrel 12 may be raised to the position shown in Figure 1a wherein the port 77 is above the packing gland 15. In this position of the mandrel 12, the downward flowing fluid in the casing 10 and exterior of the body 11 will enter the inverted J-slots 74—75 and then enter the mandrel 12 through the port 77. The force of the fluid entering the mandrel 12 through the port 77 will cause some of this fluid to enter the chamber below the gland 15 through the open lower end of the mandrel 12 and maintain the valve 38 in a closed position.

If it is desired to withdraw the entire tool this may be done by pulling the mandrel 12 upwardly so that the collar 71 engages the shoulder 73 at the upper end of the body 11. At this time the releasing collar 70 will be in an uppermost position and engage the lower end of shoulders on the slips 50 so as to move the slips 56 and wedge 66 upwardly to a released position, which is the position shown in Figure 1. The slips 56 will then be released from the inner surface of the casing 10 and the entire tool may frictionally be pulled upwardly from the casing 10. In withdrawing the tool from the casing 10, it is not necessary to first move the mandrel 12 upwardly until the collar 71 engages the pins or studs 76 in the horizontal slots 75. This rotary movement may be given to the mandrel 12 so as to lock the body 11 relative to the mandrel 12 but such rotary movement is not necessary. Preferably the collar 71 is so positioned on the mandrel 12 that when the collar 71 engages the shoulder 73, the pins 76 are in a position confronting the adjacent ends of the horizontal slots 75.

With a tool of this character, the cement or other material may be discharged to the well irrespective of whether the well is dry or whether there is fluid or gas in the well. In the event there is fluid or liquid in the well when the tool is lowered to a point below the upper level of the liquid, the valve 38 will be moved to an open position and permit the liquid to flow into the interior of the tool and from the interior of the tool the liquid will flow through the mandrel 12 out of the port 77 into the body 11 and out of the body 11 through the inverted J-slots 74.

In the event during the raising of the tool from the casing 10 the sealing members 39 and 43 should stick to the inner surface of the casing 10, the sealing members 39 and 43 may be forcibly released by applying fluid pressure in the casing 10. This fluid pressure will push the sealing members 39 and 43 downwardly to a released position. Under normal conditions, however, the sealing member 39 and 43 will be moved to a released position by merely pulling the tool upwardly and if the sealing members 39 and 43 stick they will slide downwardly on the sleeve 43

which at this time is moving upwardly and in this manner the pressure of the ring 43 on the sealing member 39 and the valve member 44 on the sealing member 43 will be released so that the sealing members 39 and 43 may readily contract to the full line position shown in Figure 1a.

What I claim is:

1. A formation sealing tool comprising a tubular body, a downwardly closing valve at the lower end of said body, distortable sealing means carried by said body, a combined cylindrical valve and sealing means operator slidably carried by said body, an annular valve seat carried by said body said body being formed with outlet ports above said first valve and confronting said second valve when said second valve is in closed position and engaged with said annular valve seat, said second valve including an annular pressure operated valve operating means whereby fluid pressure passing through said ports will move said second valve to an open position and simultaneously distort said sealing means to a sealing position with the casing.

2. A formation sealing tool for a well casing comprising a tubular body, a downwardly closing valve in one end of said body and disposed axially thereof, a fluid pressure actuated cylindrical valve slidably carried by said body, said cylindrical valve having an annular chamber and said body having ports communicating with said chamber when said cylindrical valve is in a lower closed position, distortable sealing means slidably carried by said body engageable with said cylindrical valve and movable upwardly by said cylindrical valve to a distorted sealing position, and means discharging a fluid under pressure into said body and through the ports therein into said annular chamber to open said cylindrical valve.

3. A formation sealing tool comprising a tubular body insertable in a well casing, an outwardly closing valve at one end of said body, a fluid material conducting mandrel concentric to said body, packing means in said body slidably and rotatably mounting said mandrel in said body, said mandrel having an open end in said body and a port spaced from said open end, a collar fixed to said mandrel above said port, outwardly extending pins carried by said collar, an inwardly extended shoulder carried by said body for limiting the endwise movement of said collar and mandrel in one direction, said body having inverted J-slots in which said pins loosely engage, pivoted body clamping members carried by the opposite end of said body, an inverted substantially conical expanding member slidable on said mandrel and engageable with said clamping members for moving said clamping members outwardly into clamping engagement with the well casing, an upper operator carried by said mandrel engageable with said expanding member upon endwise movement of said mandrel in a downward direction for moving said expanding member to operative position, and a second operator fixed to said mandrel below said expanding member and engageable with said expanding member for moving said expanding member to released or inoperative position upon endwise movement of said mandrel in an upward direction.

4. A formation sealing tool for a well casing comprising a tubular body, an outwardly closing valve at one end of said body, a fluid conducting mandrel slidable and rotatable in said body, one end of said mandrel terminating in said body, radial locking pins carried by said mandrel, said body having inverted J-slots in which said pins loosely engage, clamping means carried partly by said body and partly by said mandrel for clamping said body to the casing upon endwise movement of said mandrel in one direction, means carried by said mandrel for releasing said clamping means from the casing upon endwise movement of the mandrel in the opposite direction, and pressure operated combined sealing means and valve structure carried by said body adjacent said first valve for sealing the space between the said one end of said body and the casing, the force exerted by said combined sealing means and valve structure in moving to sealing position acting in a reverse direction to the force exerted by the clamping part carried by said mandrel to thereby increase the clamping engagement of said clamping means with the casing.

5. A formation sealing tool for a well casing comprising a tubular body, a downwardly closing valve carried by the lower end of said body, a plurality of clamping slips pivotally carried by the upper end of said body, springs carried by said body for holding the body concentric to the casing and for frictionally holding the body against sliding movement relative to the casing, a fluid conducting mandrel slidable relative to said body, a wedge slidable on said mandrel, an abutment fixed to said mandrel engageable with said wedge for moving said wedge downwardly to thereby move said slips outwardly to clamping position, and a second abutment carried by said mandrel below said wedge active upon upward movement of said mandrel to move said wedge to released position.

6. A formation sealing tool for a well casing comprising a tubular body, a downwardly closing valve carried by the lower end of said body, a plurality of clamping slips pivotally carried by the upper end of said body, springs carried by said body for holding the body concentric to the casing and for frictionally holding the body against sliding movement relative to the casing, a fluid conducting mandrel slidable relative to said body, a wedge slidable on said mandrel, an abutment fixed to said mandrel engageable with said wedge for moving said wedge downwardly to thereby move said slips outwardly to clamping position, a second abutment carried by said mandrel below said wedge active upon upward movement of said mandrel to move said wedge to released position, and coacting locking means carried by said mandrel and said body for releasably locking said mandrel to said body.

7. A formation sealing tool for a well casing comprising a tubular body, a downwardly closing valve carried by the lower end of said body, a plurality of clamping slips pivotally carried by the upper end of said body, springs carried by said body for holding the body concentric to the casing and for frictionally holding the body against sliding movement relative to the casing, a fluid conducting mandrel slidable relative to said body, a wedge slidable on said mandrel, an abutment fixed to said mandrel engageable with said wedge for moving said wedge downwardly to thereby move said slips outwardly to clamping position, a second abutment carried by said mandrel below said wedge active upon upward movement of said mandrel to move said wedge to released position, said body having a pair of inverted J slots constituting combined fluid ports and keepers, and locking pins carried by said mandrel engageable in said slots for releasably locking said mandrel to said body.

8. A formation sealing tool for a well casing

comprising a tubular body, a fluid conducting mandrel movably carried by said body, a downwardly closing valve at the lower end of said body, means operable by movement of said mandrel for releasably clamping said body to the casing, a pair of distortable sealing members slidably carried by said body, a ring between said members and slidably carried by said body, and an annular combined fluid pressure operated valve and operator for said sealing members slidably carried by said body, said body having ports above said first valve confronting said second valve when said second valve is in closed position.

9. A formation sealing tool for a well casing comprising a tubular body, a fluid conducting mandrel movably carried by said body, a downwardly closing valve at the lower end of said body, means operable by movement of said mandrel for releasably clamping said body to the casing, a pair of distortable sealing members slidably carried by said body, a ring between said members and slidably carried by said body, and an annular combined fluid pressure operated valve and operator for said sealing members slidably carried by said body, said body having ports above said first valve confronting said second valve when said second valve is in closed position, said annular valve having an annular chamber confronting said ports and opening through the lower end of said annular valve whereby fluid pressure in said chamber will initially move said annular valve to an upper open position and simultaneously distort said sealing members against the casing.

10. A formation sealing tool for connection to a tubing supply line and insertable in a well casing, said tool comprising a hollow body, a downwardly closing valve in the lower end of said body, said body having a plurality of ports above said valve, pressure operated valve means for said ports slidably carried by said body, expansible sealing means slidably carried by said body and engageable with said pressure operated valve means for expansion and movement thereby, casing clamping members pivotally carried by said body adjacent the upper end thereof, means connected to the tubing for moving said clamping members to clamping position upon movement of said tubing downwardly relative to the body, means movable with said tubing and operable upon movement of said tubing upwardly relative to said body for moving said clamping members to released position.

11. A formation sealing tool comprising a tubular body, a downwardly closing valve at the lower end of said body, distortable sealing means disposed about said body, a combined cylindrical valve and annular sealing means operator slidably carried by said body, annular valve seat carried by said body, said body being formed with outlet ports above said first valve and confronting said second valve when said second valve is in closed position, an annular valve seat carried by said body below said outlet ports, said cylindrical valve when in closed position forming a pressure chamber about said body communicating with said ports, fluid pressure in said chamber acting on said operator to thereby move said valve upwardly to an open position and simultaneously distort said sealing means to a sealing position relative to the casing.

12. In a formation sealing tool for an oil well casing and with such tool having a body for insertion into the casing and a mandrel for attachment to a tubing for conducting a sealing medium; the combination of a sleeve secured within and extending from the lower end of said body, said sleeve being formed at its lower end with a peripheral extension, a valve seat at the lower end of said sleeve, a fluid pressure operated valve engageable on said seat, said sleeve having ports in its body adjacent said seat, and a fluid pressure operated sealing structure for opening and closing said ports and for sealing the space between said sleeve and casing, said structure being slidably mounted upon said sleeve between said extension and the lower end of said body.

13. In a formation sealing tool for an oil well casing and with such tool having a body for insertion into the casing and a mandrel for attachment to a tubing for conducting a sealing medium; the combination of a sleeve secured within and extending from the lower end of said body, said sleeve being formed at its lower end with a peripheral extension, a valve seat carried by said sleeve, a fluid pressure operated valve engageable on said seat, said sleeve having ports in its body adjacent said seat, and a fluid pressure operated combined controlling and sealing structure for opening and closing said ports and for sealing the space between said sleeve and casing, said structure being slidably mounted upon said sleeve between said extension and the lower end of said body, said structure including alternately disposed superimposed rigid and distortible annular members, said rigid members being of less outer diameter than said distortible members.

14. In a formation sealing tool for an oil well casing and with such tool having a tubular body for insertion into the casing and a mandrel for attachment to a tubing for conducting a sealing medium; the combination of a sleeve secured within and extending from the lower end of said body, said sleeve being formed at its lower end with a peripheral extension, a valve seat carried by said sleeve, a fluid pressure operated valve engageable on said seat, said sleeve having ports in its body adjacent said seat, and a fluid pressure operated sealing structure for opening and closing said ports and for sealing the space between said sleeve and casing, said structure being slidably mounted upon said sleeve between said extension and the lower end of said body, said structure including alternately disposed superimposed rigid and distortible annular members, said rigid members being of less outer diameter than said distortible members, said members and the lower end of said tubular body having inclined surfaces correlating with the distortible members for shifting the latter to sealing position when said structure is operated by fluid pressure from within said sleeve.

15. In a formation sealing tool for an oil well casing a tubular body formed of an upper section provided with diametrically opposed lengthwise slots, an intermediate section connected to said upper section and provided intermediate its ends with an axially apertured partition and a lower end section connected to said intermediate section, a sleeve having its upper terminal portion secured to the lower end of said lower section and provided at its lower end with a valve seat, a fluid pressure operated valve within the sleeve correlating with said seat, said sleeve being formed with lateral ports above said seat and a peripheral extension at its lower end, a vertically movable fluid pressure operated chambered cylindrical valve encompassing said sleeve

for normally closing said ports, a distortible sealing means about said sleeve, and interposed between the latter and the lower end of said lower section and distorted to sealing position on the upward movement of the cylindrical valve, an expansible clamping structure pivoted to the upper end of said upper section, and a fluid conducting mandrel extending through said clamping structure, body and partition for expanding the clamping structure to clamping position, said mandrel having oppositely disposed means travelling in said slots and a lengthwise slot in proximity to its lower end for positioning below said partition when the mandrel is in tool expanding position and for positioning above said partition when the mandrel is in tool retracting position.

16. A formation sealing tool for a well casing comprising a tubular body for insertion into the casing, a fluid conducting mandrel carried by said body, a downwardly closing valve at the lower end of said body, a second endwise movable cylindrical valve carried by said body adjacent said first valve, said second valve being formed with a downwardly opening annular chamber about said body and said body having ports communicating with said chamber, fluid pressure in said chamber effecting endwise movement of said second valve to an open position, and a distortable sealing member about said body and bearing against said second valve whereby movement of said second valve to an open position will distort said sealing member outwardly to a position contacting with the inner surface of the well casing.

17. A formation sealing tool for a well casing comprising a tubular body for insertion into the casing, a fluid conducting mandrel carried by said body, a closure means at the lower end of said body, a downwardly flared distortable sealing member carried by said body adjacent the lower end thereof, said body having outlet ports below said member, and means normally engageable over said ports for closing the latter, said means being movable upwardly by fluid pressure passing through said ports to uncover said ports and simultaneously distort said member outwardly to contact the inner surface of said casing.

18. A formation sealing tool for a well casing comprising a tubular body for insertion into the casing, a fluid conducting mandrel carried by said body, a downwardly closing valve at the lower end of said body, a downwardly flared distortable sealing member carried by said body adjacent the lower end thereof, said body having outlet ports below said member, and means normally engageable over said ports for closing the latter, said means being movable upwardly by fluid pressure passing through said ports to uncover said ports and simultaneously distort said member outwardly to contact the inner surface of said casing.

WOODROW W. DRINKARD.