(12) PATENT ABRIDGMENT (11) Document No. AU-B-29859/89
(19) AUSTRALIAN PATENT OFFICE (10) Acceptance No. 616470

(54) Title
NON-CONTINUOUS HOLOGRAMS, METHODS OF MAKING THEM AND ARTICLES INCORPORATING THEM

International Patent Classification(s)
(51)[4] **G03H 001/18** **B42D 015/02** **B44F 001/12**

(21) Application No. : **29859/89** (22) Application Date **10.02.89**

(30) Priority Data

(31) Number	(32) Date	(33) Country
156305	**12.02.88**	**US UNITED STATES OF AMERICA**
160641	**26.02.88**	**US UNITED STATES OF AMERICA**
291247	**23.12.88**	**US UNITED STATES OF AMERICA**

(43) Publication Date . **17.08.89**

(44) Publication Date of Accepted Application **31.10.91**

(71) Applicant(s)
AMERICAN BANK NOTE HOLOGRAPHICS INC.

(72) Inventor(s)
DONALD W. MALLIK

(74) Attorney or Agent
SPRUSON & FERGUSON , GPO Box 3898, SYDNEY NSW 2001

(56) Prior Art Documents
GB 2136352
US 4421380
EP 328086

(57) Claim

7. An article having a substrate with visual information carried on at least a portion of one surface area thereof, and a hologram or diffraction grating device attached to said one surface, said device being attached to said at least one substrate surface area over at least a portion of said visual information, said device including a plurality of discontinuous reflective portions in excess of about 25 such portions per inch in at least one direction across an area thereof that, when illuminated with light, reflect at least a portion of such light to form a reconstruction of a light pattern recorded on said device, and said device being substantially transparent between said discontinuous reflective portions and positioned with said discontinuous reflective portions overlying said at least a portion of said visual information, thereby to both render said visual information visible through the device and allow viewing of the light pattern reconstructed from the device.

12. A document having at least some visual information thereon protected from alteration, comprising a hologram or diffraction grating device firmly attached to said document over said at least some visual information, said device comprising a continuous surface relief pattern across a surface area of a substantially transparent layer, said surface relief pattern containing information of an image or other light pattern,

.../2

and a discontinuous pattern of 25 or more regions per inch of substantially completely reflective material carried by said surface relief pattern in at least one direction across at least a portion of said surface area and said at least some visual information, said device being characterized by permitting, when illuminated with light, both the viewing of said at least some visual information therethrough and an image or other light pattern reconstructed from said surface relief pattern.

S & F Ref: 85620

FORM 10

COMMONWEALTH OF AUSTRALIA

PATENTS ACT 1952

COMPLETE SPECIFICATION

616470

(ORIGINAL)

FOR OFFICE USE:

Class Int Class

Complete Specification Lodged:
Accepted:
Published:

Priority:

Related Art:

Name and Address of Applicant: American Bank Note Holographics, Inc.
500 Executive Boulevard
Elmsford New York 10523
UNITED STATES OF AMERICA

Address for Service: Spruson & Ferguson, Patent Attorneys
Level 33 St Martins Tower, 31 Market Street
Sydney, New South Wales, 2000, Australia

Complete Specification for the invention entitled:

Non-Continuous Holograms, Methods of Making Them and Articles Incorporating Them

The following statement is a full description of this invention, including the best method of performing it known to me/us

5845/3

NON-CONTINUOUS HOLOGRAMS, METHODS OF MAKING THEM AND ARTICLES INCORPORATING THEM

Abstract of the Disclosure

Non-continuous reflective holograms or diffraction gratings are provided in various forms for authenticating documents and things, and for decorative and product packaging applications. In one specific authentication application, such a hologram or diffraction grating is firmly attached to a surface that contains visual information desired to be protected from alteration. Examples of such information include written personal data and photograph on a passport, driver's license, identity card and the like. The reflective discontinuous hologram is formed in a pattern that both permits viewing the protected information through it and the viewing of an authenticating image or other light pattern reconstructed from it in reflection. In another specific authentication application, a non-transparent structure of two side-by-side non-continuous holograms or diffraction patterns, each reconstructing a separate image or other light pattern, increases the difficulty of counterfeiting the structure.

NON-CONTINUOUS HOLOGRAMS, METHODS OF MAKING THEM AND ARTICLES INCORPORATING THEM

BACKGROUND OF THE INVENTION

This invention relates generally to the optical arts of holography and diffraction gratings, and more particularly, to a special forms of these optical devices for use in authenticating items as genuine and in various decorative and commercial applications.

There is a wide-spread need to authenticate written information and articles in order to prevent both the counterfeiting of the article and an alteration of a genuine article. Examples of such articles include credit cards, identification cards, driver's licenses, transit passes, passports, stock certificates, and the like. Holograms are currently being extensively used on credit cards and transit passes, for example. An image having observable three-dimensional characteristics is viewable in light reflected from such a hologram.

Because holograms are difficult to make and require a high level of technical sophistication, the difficulty of making counterfeit credit cards, or other article to which a hologram is attached, is increased. A master hologram is made in an optical laboratory with

AUSTRALIAN PATENT OFFICE

coherent light. The resulting master hologram is capable of reconstructing an image of the object from which it is made. Low-cost replicas are then made from that master. Several specific replication techniques are known, the most common currently being to make the master in a manner that the object information is stored in a surface relief pattern. This surface relief pattern is then transferred to replicas by an embossing or casting operation. A layer of reflective material is applied to each replica surface relief pattern so that the image may be viewed in light reflected from that pattern. The holograms are then firmly attached to the credit card, or other item to be authenticated. The hologram is also constructed of suitable materials so that an attempt to remove the hologram from the article will destroy it, thereby eliminating the transfer of a hologram to some other article.

An authenticating hologram of this type cannot cover printing, photographs and the like carried by the article to be authenticated when that information wants to be viewed. This is because the reflective layer of the hologram is substantially opaque so that any visual information on the article in the area to which it is attached is covered by the hologram. Some credit cards are authenticating some of the raised alpha-numeric information on them by covering at least a few of the characters with the hologram. But any printing, photographs or the like on a flat surface under the hologram is not viewable.

There has been some effort to control the amount of reflective material that is applied to the surface relief hologram so that it will both reflect enough light in order to reconstruct an image recorded in the hologram and at the same time be transparent enough to make visible any printing, photograph or other

visual information under the hologram. Besides authenticating the article to which the hologram is attached and the visual information under it, such a hologram has the potential of preventing alteration of that information on an authentic article. It has been found to be very difficult, however, to be able to repeatedly form a reflective layer on the hologram that gives it these advantageous characteristics. Aluminum is usually employed as the reflective material. A proper thickness of that layer can result in the desired partial transparency and partial reflection, but the processes used to date have been very difficult to control in order to provide the proper thickness.

It is the object of the present invention to overcome or substantially ameliorate the above disadvantages.

There is disclosed herein an article, comprising a continuous, unperforated sheet carrying a hologram or diffraction pattern in the form of a number of discontinuous reflective areas with a density of substantially from 25 to 400 such areas per inch in at least one direction thereacross, said sheet being substantially transparent between said reflective areas in order to allow viewing therethrough, said discontinuous areas being characterized by reconstructing a recognizable light pattern by diffraction of incident light therefrom.

There is further disclosed herein an article having a substrate with visual information carried on at least a portion of one surface area thereof, and a hologram or diffraction grating device attached to said one surface, said device being attached to said at least one substrate surface area over at least a portion of said visual information, said device including a plurality of discontinuous reflective portions in excess of about 25 such portions per inch in at least one direction across an area thereof that, when illuminated with light, reflect at least a portion of such light to form a reconstruction of a light pattern recorded on said device, and said device being substantially transparent between said discontinuous reflective portions and positioned with said discontinuous reflective portions overlying said at least a portion of said visual information, thereby to both render said visual information visible through the device and allow viewing of the light pattern reconstructed from the device.

There is still further disclosed a document having at least some visual information thereon protected from alteration, comprising a

AUSTRALIAN PATENT OFFICE

hologram or diffraction grating device firmly attached to said document over said at least some visual information, said device comprising a continuous surface relief pattern across a surface area of a substantially transparent layer, said surface relief pattern containing information of an image or other light pattern, and a discontinuous pattern of 25 or more regions per inch of substantially completely reflective material carried by said surface relief pattern in at least one direction across at least a portion of said surface area and said at least some visual information, said device being characterized by permitting, when illuminated with light, both the viewing of said at least some visual information therethrough and an image or other light pattern reconstructed from said surface relief pattern.

There is further disclosed herein a composite structure, comprising:

a substrate containing visual information across at least a portion of a first surface thereof,

a substantially transparent layer attached to said first substrate surface over at least a portion of said visual information,

a relief pattern formed substantially continuously across at least a portion of a surface of said layer that faces said first substrate surface, said surface relief pattern being characterized by diffracting incident light into a recognizable image or other light pattern, and

a discontinuous, substantially regular pattern of at least sixty-five reflective and substantially opaque material areas per inch extending in at least one direction across said substrate surface over said at least a portion of said visual information and positioned between said substrate and said substantially transparent layer, said reflective areas covering less than 60 percent of said at least a portion of said visual information,

thereby to render viewable in light reflected from the composite structure both said recognizable image or other light pattern and the substrate visual information.

BRIEF DESCRIPTION OF THE DRAWINGS

A preferred form of the present invention will now be described by way of example with reference to the accompanying drawings, wherein:

Figure 1 shows an exploded view of an article having visual information that is protected by an improve hologram of the present invention being attached thereto;

AUSTRALIAN PATENT OFFICE

Figure 2 is a plan view of the protected article of Figure 1;

Figure 3(A) is a cross-sectional view of the hologram of Figure 1 taken across section 3(A)-3(A) thereof;

Figure 3(B) is a cross-section view of the protected article of Figure 1, taken across section 3(B)-3(B) thereof;

Figure 4 is a cross-sectional view of the protected article of Figure 2, taken across section 4-4 thereof;

Figures 5(A), 5(B) and 5(C) illustrate generally a known technique for making a master hologram;

Figures 6(A) through 6(E) show the steps in a process for making replicas of a master hologram made in accordance with the method illustrated in Figure 5;

Figure 7 shows an enlarged plan view of a hologram replica made in accordance with the method illustrated in Figure 6;

Figures 8A and 8B show an article protected with an alternative form of hologram;

Figures 9A and 9B show an alternate technique for protecting an article;

AUSTRALIAN PATENT OFFICE

Figure 10 shows a non-security application of a hologram of the present invention in product packaging;

Figure 11 is a cross-sectional view of one embodiment of a multiple hologram;

Figure 12 shows an a more specific form of the multiple hologram embodiment of Figure 11; and

Figures 13A, 13B, 13C illustrate a method of making another embodiment of a multiple hologram.

DESCRIPTION OF THE PREFERRED EMBODIMENTS

Several different hologram structures, methods of making such structures, and various applications are described. These hologram structures have several different uses but each includes at least one non-continuous hologram as part it.

Partially Transparent Authenticating Hologram

Referring initially to Figure 1, an exploded view of an article protected by the hologram of the present invention is given. A substrate 11 contains written information 13 printed on a portion of the surface and a photograph 15 attached to that same surface. This example is typical of a class of documents that includes passports, driver's licenses and personal identification cards of various types. The writing 13 is printed flat on the article's surface, and contains, in this example type of article, personal information about the bearer. The photograph 15 is that of the bearer. The substrate 11 can be paper, plastic, or another material that contains some visual information to be protected from alteration or replacement.

The article includes a hologram 17 from which an image 19 of an object is viewable in ordinary light. The hologram 17 is also partially transparent so that when attached to the surface of the substrate 11 containing the writing 13 and photograph 15, alteration of that information is prevented, in addition to authenticating the genuineness of the article. The hologram 17 is securely attached to the substrate 13 by a transparent adhesive. The adhesive is chosen to have a shear strength that is greater than that of the hologram 17 itself so that any attempted removal of the hologram from the substrate causes the hologram to be torn apart. Alteration of the information carried by the substrate 11 is thus made very difficult, if not impossible.

Figure 2 shows a front face of the article with the hologram 17 attached to the substrate 11, showing that both the information printed on the substrate 11 and an image 19 reconstructed from the hologram are simultaneously viewable in ordinary room or outside light. An optical protective device in the form of a hologram of a complex object is generally preferred for protection, but a simpler diffraction grating could be substituted for the hologram 17 so long as it diffracts ordinary light into a recognizable pattern in a manner that a genuine article can be distinguished from a counterfeit. Holograms of complex objects generally provide more security because they are more difficult to make, and thus the chances of them being counterfeited are reduced.

Enlarged cross-sectional views of the substrate 11 and the hologram 17 are provided in Figure 3. The writing 13 is shown as ink attached to one surface of the substrate 11. The hologram 17 includes a clear plastic film 21 having a relief pattern 23 in one

surface thereof that contains the holographic object information. A discontinuous layer 25 of reflective material, most commonly aluminum, is carried by the surface relief pattern 23. An adhesive layer 27 firmly attaches the exposed portions of the surface relief pattern 23 and the reflective portions 25 to the substrate 11. Figure 4 shows an enlarged cross-sectional view of the article with the protective hologram attached.

The usual hologram replica, such as that currently used on credit cards, contains a continuous layer of reflecting material, such as aluminum or some other metal, attached to the surface relief pattern of the film. That layer is made thick enough so that as much light as possible is reflected from it, thus maximizing the brightness of the viewed hologram image. The hologram replica 17 is different primarily in using repetitive spots 25 of substantially the same totally reflecting material. The spaces between the reflective spots 25 allow the information carried on the surface of the substrate 11 to be viewed through the hologram 17, while the portions of the surface relief pattern 23 that have reflective spots attached result in light being reflected into a holographic image. The same image can be formed by the hologram 17 as if the reflective layer is continuous, the primary difference being that the image will not be as bright. The effect of a visible screen created by the reflective spots 25 can be minimized by making them small and choosing the appropriate spacing, as discussed hereinafter with respect to Figure 7.

It is common for security holograms to be attached to a substrate in one of two ways that can also be used with the hologram 17. One way is simply to chose the adhesive 27 to be of a pressure sensitive

type. The hologram 17 and substrate 11 are then tightly pressed together at room temperature in order to form a bond between the two of them. After manufacture of the hologram replica 17 itself, such an adhesive is generally covered by a protective release paper layer 29 for storage and shipping, and then is removed just before application to a substrate.

A more popular method of attachment, particularly in high volume operations such as found in applying holograms to credit cards, is a hot stamping technique. This hot stamping technique carries the hologram 17 on a flexible carrier sheet 31 with a wax-like release coating 33. The adhesive 33 is chosen to melt at a much lower temperature than the adhesive 27. When the entire structure of the hologram 17 attached to the carrier ~~31 is~~ then pressed against the substrate 11 at an elevated temperature, the hologram 17 is released from the carrier 31 as the adhesive 27 is softened for good attachment to the substrate. In the hot stamping operation, the release layer 29 is not utilized. Hot stamping foil and its use in holography is described in U.S. patent no. 4,728,377 - Gallagher (1988).

Although well-known, the usual technique for constructing a master hologram of a three-dimensional object is briefly described with respect to Figure 5, for completeness. Figure 5 illustrates an optical layout for making a first hologram H1 from a diffusely reflecting three-dimensional model 35. The model is illuminated by a laser whose output passes through a beam splitter 37. A portion of the intensity of the laser output is directed as a reference beam 39 onto a photosensitive detector 41 for interference at a finite angle with a beam 43 that is reflected from the object 35. When the photosensitive detector 41 is processed,

the hologram H1 results. Figure 5 includes very simplified diagrams, of course, which omit other optical elements in the paths of the beams that are generally used or desirable.

A second step of the master making process is shown in Figure 5(B). The hologram H1 is illuminated with coherent light from a laser in a manner to reconstruct an image 45 of the original object 35. At the location of the image 45 is positioned a second photosensitive detector 47 which becomes, when processed, a second hologram H2. In order to form a hologram, a beam splitter 49 is positioned in the laser output beam in order to direct a portion of its intensity directly onto the photosensitive detector 47 for interference at a finite angle with a first order diffracted beam 51 that is diffracted from the hologram H1.

The photosensitive detector 47 is usually chosen to be a photoresist material so that the information of the interference pattern between the two interfering beams can be stored as a surface relief pattern. When a highly reflective, opaque layer is then applied to the surface relief pattern, a reflective hologram results, such as hologram 55 of Figure 5(C). An image 57 can then be reconstructed and viewed by reflecting light from an ordinary light source 53. Light reflected directly by the reflecting layer, in a zero order beam 59, is not utilized but rather a first order diffracted beam 61, containing the image 57, is used to view an image.

Of course, for making holograms in high volume, a master hologram H2, hologram 47 of Figure 5(B), is not directly made into such a reflective hologram. Rather, the surface relief pattern on the H2 hologram is reproduced in the form of a plurality of metal stampers

which are then used to replicate the surface relief pattern in some way. The several views of Figure 6 illustrate, in sequence, the making of the hologram 17.

Initially, the film 21 is formed with a surface relief hologram replica in one of two ways. One way utilizes an embossing technique wherein the metal surface relief masters are urged against thin, smooth, clear plastic film under an appropriate amount of pressure and heat in order to form a replica 23 of that surface relief pattern. A second way utilizes a casting technique, wherein the surface relief metal master is used as a mold to which a clear liquid resin is applied and cured between an optically clear flexible plastic substrate and the master mold. A continuous casting process is usually used, wherein the master hologram is fitted on the outside of a drum over which the substrate passes, and the resin is cured by passing ultraviolet light through the substrate while in contact with the master. Such a process is described for replicating holograms and other microstructures in U.K. published application no. 2,027,441A - Martens (1980). By either the embossing or casting technique, the desired surface relief pattern 23 is replicated.

A second major step in making a replica is to form a highly reflective, opaque layer 63 on the surface relief pattern 23. This is most conveniently done by evaporating aluminum onto the film 21.

A next step, illustrated by Figure 6(C), is to print onto the reflective layer 63 spots 65 of protective material of a size and in a pattern corresponding to that of the desired reflective spots 25 on the end product. The material used for the spots 65 must be resistant to an acid bath or other technique that is subsequently used to remove the reflective material layer 63 that is not covered by such material.

Figure 6(D) illustrates the structure after the next step of removing exposed portions of the reflective layer 63 has been accomplished. The structure is then washed and dried, the completed hologram structure being as shown in Figure 6(D). However, in some processes, the masking spots may additionally be removed, resulting in a structure illustrated in Figure 6(E). A subsequent step (not shown) of applying the adhesive layer 27 to the hologram structure of either Figure 6(D) or Figure 6(E) results in the hologram replica 17 described previously.

There are several alternative known techniques which can be applied as part of the steps discussed with respect to the illustrations of Figures 6(C) through 6(E). If the reflective layer 63 is aluminum, which is the most common material in this application, dilute sodium hydroxide is suitable for application to the layer 63 of Figure 6(C) in order to etch away its exposed areas, resulting in what is shown in Figure 6(D). The material for the dot mask 65 must properly stick to the reflective layer 63 and be resistant to whatever etching solution is utilized.

As an alternative to using a resist mask to define the portions of the reflective layer to be removed, an appropriate etching solution may be "printed" directly onto the reflective surface in the desired pattern of material removal. After etching takes place in this pattern, the etched material is neutralized and/or removed.

The pattern of masking dots 65 may be applied to the reflective layer 63 by a spray technique through a mask having holes corresponding to the desired locations of the spots 65. However, it is preferable to use a technique and type of equipment found in the printing industry to print fine-lined pictures and

patterns. In one such technique, a Gravure cylinder is used to apply the spots. Such a cylinder has a very smooth surface except for carefully machined indentations at the locations where the mask dots 65 are to be placed. A continuous web of film 21 with continuous layer 63 of reflective material is then passed across this surface in a rolling action so that liquid contained within these holes is transferred to the reflective layer 63. The masking liquid is placed into the holes by the cylinder being immersed in the liquid and excess being removed by a blade that scrapes along the surface of the cylinder. The primary advantage of borrowing this printing technique for this new application is the high resolution and control of the resulting reflective dots that can be obtained. Another known technique can alternatively be borrowed from printing technology, including one selected from any of silk screen, flexographic, letter press or offset techniques.

There are several alternative techniques for forming the pattern of reflective dots 25 that can be utilized in place of the printing methods discussed above. One way is to apply the aluminum directly to the surface relief pattern 23 of the film 21 by evaporation through a mask having holes corresponding to the locations of the desired spots 25. A disadvantage of this technique is, of course, that aluminum will deposit on the mask as well, making its life very short or creating problems in keeping the mask clean. Another alternative is to form the spots 25 directly by a printing technique with the use of a liquid form of aluminum, such as aluminum trihydride.

Referring to Figure 7, a plan view of the pattern of reflective dots 25 is illustrated. Of course, the dots 25 can be made in practically any

shape, and the pattern may be varied, the important consideration being to have enough of the hologram made reflective so that a holographically reconstructed image may be clearly seen, but yet not so much that the visual information beneath the hologram on the article being protected is clearly viewable and readable. The pattern of dots has no correspondence with either the image of the hologram or the visual information it covers. Since it usually simplest to form circularly shaped dots 25 in a regular, repeated pattern, that is the example being described herein but it will be understood that is not a requirement of the invention. A dot spacing, expressed in lines (dots) per lineal inch, can be substantially within the range of from 25 to 400, depending upon the specific effect desired. The amount of space across a hologram that is covered by the dots can be from ten percent to ninety percent. A preferred range for most applications is a dot spacing of from 65 to 200 per inch with overall density being within a range of from 15 to 60 percent. Each of the dots 25 is preferably made of aluminum having a thickness within a range of from 200 to 600 Angstroms.

Another desirable characteristic for most applications is to make the individual dot size and density small enough so that they are not resolvable (viewable) by the ordinary observer when held by hand at a normal reading distance, generally from about 16 to 30 inches. The printing techniques used for forming the size of the individual dots allows them to be made very small and a precise pattern formed.

One application of the security hologram 17 is for passports. In such an example, the hologram must be transparent enough so that the photograph and personal data on the page to which the hologram is attached are be clearly visible. The hologram image in this case

does not form a part of the overall visual artwork but serves a sole function of allowing passport control officers and the like to easily determine whether the holographic image exists and thus whether the passport is genuine or not. For such an application, the following parameters are generally desirable: dot spacing of from 65 to 130 lines per inch and an overall density of from 15 to 30 percent.

In other applications, such as with credit cards or other commercial articles, it is desired that the hologram image be as bright as reasonably possible in order that it can form part of the artwork of the card or other article. In this case, more area needs to be covered by the reflective dots 65. For this application, the following range of parameters is selected: a dot spacing of from 85 to 200 lines per inch and an overall proportion of the active hologram area covered by reflective material being from 30 to 60 percent.

In the document authentication applications of the hologram described hereinabove, the example composite article, such as shown in Figure 2, provides for the image reconstructed from the hologram to be viewable simultaneously with the printed information that is located behind the hologram. It may be desirable in some applications to provide for the printed information to be viewable with a much reduced, or near zero, intensity of the reconstructed holographic image, the holographic image then being viewable upon the observer reorientating the article somewhat in order to verify its authenticity. Two specific ways of providing this characteristic are illustrated in Figures 8 and 9.

Referring to Figures 8A and 8B, an article 75 containing a hologram on its side facing an observer 76

has been constructed so that the article must be rotated about a substantially horizontal axis in order for a reconstructed image 85 to be observed. Figure 8A illustrates the observer 76 looking at the article 75 straight on, through the hologram, in order to see the printed information along a path 77. The observer will naturally orient the article 15 in a way that avoids seeing light 79 reflected from a light source 78 by the article 75. The hologram on the article 75 has been made in a manner that an image reconstructed from it will not be visible, or is very dim, when the article is oriented with respect to the observer's line of vision to provide the best view of the printed information and/or photograph behind the hologram.

Figure 8B shows the article 75 being oriented to a position with respect to the viewer 76 that is an unnatural one for the normal reading of a document but which results in an image 85 reconstructed from the hologram to be viewable along a path 81. The hologram is constructed so that the path 81 forms a small finite angle with a surface of the article 75 and the hologram attached to it, and so that light 83 reflected from the article avoids the eyes of the viewer 76.

As is well known, a master hologram may be made so that its reconstructed image, as well as those of its replicas, are viewable only when the hologram is tilted to an angle with respect to the viewer that is within a particular narrow range of angles. In such a case, the hologram 17 is made so that its image is reconstructed at its brightest when viewed along a path making a small angle with those surfaces, and a minimum when viewed along a perpendicular path. Such angular selectivity is accomplished by changing the initial angular relationships when the master hologram is initially made according to the standard technique illustrated in

Figure 5A.

Figures 9A and 9B show a different arrangement wherein the hologram 17 of Figure 1 is rotated ninety degrees with respect to the article 11 before they are attached. The resulting composite article 87 then provides no reconstructed holographic image when oriented with respect to the viewer, as indicated in Figure 9A, for normal observation of the information 89 carried by the article. Only a general, dull outline of the hologram image is dimly visible. But when the composite article 87 is rotated ninety degrees around a line extending between the observer's eyes and the article, as shown in Figure 9B, an image 91 reconstructed from the hologram becomes brightly visible. This particular angular sensitivity is a characteristic of the standard well known "rainbow" hologram, without having to do anything more. That is, the master making steps illustrated in Figures 5A and 5B include optics (not shown) that limit the bandwidth of the information recorded by the hologram in a manner to eliminate vertical parallax of an image reconstructed therefrom while retaining its horizontal parallax.

Partially Transparent Packaging Hologram

The hologram described hereinabove is emphasized for applications involving the authentication of documents or other articles. The same hologram also has non-security applications. An example is illustrated in Figure 10, wherein an opaque consumer package 71 includes a see-through window 73 in the form of a hologram, which can be of the type of hologram 17 discussed previously. Such a partially transparent hologram then allows the consumer to observe the contents of the package by looking through the hologram, and also to be able to observe the holographically

reconstructed image. For this application, the reflective dot spacing and density is preferably selected to be within the ranges given above for credit cards or other commercial articles.

Multiple Hologram Structure

The non-continuous hologram techniques described above also have applicability as a first step in forming a multiple hologram. To do this, one or more holograms are formed in the regions of the hologram between the reflective portions of the first non-continuous hologram formed as above. Enough space between holograms can be left in order to retain the ability to see through it to some information behind. More commonly, rather than being left transparent as described above, the space between the first hologram areas is filled in to include one or more holograms. In either case, the result is a hologram structure from which two or more images, one for each separate hologram recorded on it, can be viewed, one at a time, by properly orienting the hologram with respect to the viewer. Multiple holograms are thus recorded side-by-side, rather than being stacked one on top of another as has previously been done. This avoid problems with crosstalk between the multiple holograms as is often encountered in the previous stacking technique.

Referring to Figure 11, a cross-sectional view of an example of a multiple hologram is illustrated. The structure previously described with respect to Figure 6E is a major component. That structure is a transparent film 21, having a surface relief hologram 23 form therein, and spots 25 of reflective material attached to the surface 23. The multiple hologram of Figure 11 is formed by adding to that structure a layer 101 that covers the exposed portions of the surface

relief pattern 23 and the reflective spot 25. The second hologram is formed in a surface relief pattern 103 on an outside surface of the layer 101. The surface relief hologram 103 is then covered by a thin reflective material layer 105. The layer 101 is preferably formed by casting it on to the initial hologram structure of Figure 6E and polymerizing it in place by radiation or heat while trapped between the film 21 and a surface relief master (not shown) of the second hologram. The continuous layer 105 of reflective material is preferably made of aluminum that is deposited by any standard technique.

The first hologram master used to make the surface relief pattern 23, and the second hologram master used to make the second surface relief pattern 103, are cooperatively constructed so that the images recorded are separably reconstructed. An example is shown in Figure 11 wherein illuminating light 107 causes a first image to be reconstructed along a path 109 from light diffracted from the first hologram relief pattern 23 in regions covered by the reflective spots 25. A second image is reconstructed along a path 111 from light diffracted from the second hologram relief pattern 103 upon reflection from the layer 105 in regions between the reflective, opaque spots 25 of the first hologram. It is desirable that an interface between the layers 21 and 101, at the first hologram surface 23 between the reflective spots 25, not reflect any significant portion of incident light. This is accomplished by making the refractive indices of the layers 21 and 101 to be substantially the same.

The precise angles of the diffracted light beams 109 and 111 depends upon the optical geometry used in making the original masters of the first and second holograms from which the surface relief patterns 23 and

103 are respectively formed. Alternative to making the master holograms reconstruct images at different angles, as shown in Figure 11, or in addition thereto, the holograms can be made so that an image from one hologram is viewable when the structure of Figure 11 is held in one rotational position in the plane of the structure, while the other image is not. The second hologram reconstructed image is viewable in another rotational position, while the first is not. Such a rotational sensitive hologram has already been described with respect to Figures 9A and 9B.

Although two holograms are shown in the embodiment of Figure 11, it can be seen that two is not a limit. A third hologram can be formed intermediate of the two shown in Figure 11 by a separate casting step and aluminizing that third hologram in only a portion of the space between the reflective, opaque spot 25 of the first hologram. Thus, with such a structure, incident light would be reflected from each of the three hologram reflective layers. The holograms can be made so that, upon proper orientation of the multiple hologram structure when being viewed, only one image can be seen at one time.

The shapes and coverage of the opaque, reflective spots 25 on the first hologram of the structure of Figure 11 are preferably made in a different range than that described above for the partially transparent hologram. For the amount of the surface area of the first hologram relief pattern 23 that is covered by a reflective spot 25 is preferably about 50% of the surface area, in the case of a two hologram structure, about one-third of the surface area, in the case of a three hologram structure, and so forth. Rather than circular shapes for the reflective spot 25 of the first hologram, rectilinear shapes are preferable

for the multiple holograms so that one hologram does not become predominant over another. Squares or stripes are preferred for the first hologram reflective spots.

One use for a multiple hologram of the type described with respect to Figure 11 is for security; namely, attachment to articles or documents which are to be authenticated as genuine. Of course, since the entire hologram structure is opaque, the hologram cannot be placed over any visual information on the article or document desired to be simultaneously observed, as with the partially transparent holograms of embodiments described earlier. But the structure of Figure 11 has an advantage for authentication uses in that the first hologram is "buried" in the middle of the structure, making it virtually impossible for a counterfeiter to physically take the hologram apart in order to physically replicate the first hologram that is embodied in the relief pattern of the surface 23.

For security, decorative and other uses of the multiple hologram structure, the structure is attached to an article, document or other substrate in any of the ways discussed previously. With reference to Figure 11, a layer 113 is indicated as an adhesive for attaching the structure to a substrate 115. The adhesive 113 may be a hot melt adhesive, in the case of the multiple hologram structure being incorporated in the form of a hot stamping foil, or may be a pressure sensitive adhesive. The substrate 115 may include a credit card, stock certificate, currency, videotape, or other document or article to be authenticated as genuine, or may be a product package, novelty item or the like, in the case of commercial or decorative uses of such a multiple hologram.

The embodiment of Figure 11 shows a generic film 21 having a surface relief pattern 23 that can be

formed by either standard embossing or casting techniques. The preferred replication technique for most applications is by casting the hologram surface relief patterns. Figure 12 shows a cross-sectional view of a completed hologram having the same characteristics as that described with respect to Figure 11 but specifically showing multiple casting layers. A thin, transparent plastic film 117 has a first layer 119 formed thereon by casting a liquid resin between the film 117 and a master hologram surface relief pattern while the resin is cured in order to harden with a surface relief pattern 121 conforming to that of the master hologram. A reflective, opaque material is applied to the surface 121 in a discontinuous pattern, leaving reflective material regions 123.

The second hologram is formed by casting, directly over the surface 121 and reflective layer portions 123, a second cast layer 125. The layer 125 is formed by a second step, like the first, except that it is the film 117 with the first hologram formed that is held against a surface relief master hologram with a polymerizable liquid resin between it, so that a resulting relief pattern in an outer surface 127 conforms to the surface relief pattern of the second hologram master. That surface is then coated in its entirety with a thin, opaque, reflective coating 129. The resin used to form each of the two cast layers 119 and 125 is preferably the same, thereby resulting in the layers 119 and 125 having the same refractive indices. This then eliminates any reflection from the first hologram surface relief pattern 121 in regions that are not coated by a reflected material 123.

An alternate technique for forming a cast multiple hologram is illustrated in the three views of Figure 13. Referring to Figure 13A, a transparent film

131 first has a layer 133 cast onto one side of it in order to form a surface relief pattern 135 corresponding to that of a first hologram master. Rather than apply any reflective material to the surface 135 before forming the second hologram, discreet areas of a second resin layer 137 are formed that contain in an outer surface relief pattern 139 a second hologram that corresponds to the relief pattern of a second hologram master. The same material is preferably used for the two hologram layers 133 and 137, thereby assuring that they each have the same refractive index and the junction between the layers thus will not reflect incident light. The second hologram layer 137 is cast in a non-continuous form of squares, stripes and the like, with the same considerations applying as described above for the shape and spacing of the reflective spots 25 (Figure 11). As shown in Figure 13C, the entire exposed surface of the first and second holograms is then coated by a thin reflective layer 141 in a single step. The result is essentially the same as that of the structure of Figure 12, but the method of Figure 13 better lends itself to a continuous process since there is only a single metallizing step after both cast layers are formed.

As yet another alternative to the foregoing techniques of forming a multiple hologram, two separately replicated holograms can be attached together, face-to-face, by an appropriate transparent adhesive. For example, a partially metallized hologram, such as shown in Figure 6E, can be one of them. This hologram contains a first image. A second hologram is made to have a continuously metallized surface relief pattern, the form of which is shown in Figure 6B. The second hologram carries a second image. These two holograms are then attached together by a transparent

adhesive with their metallized layers facing each other. The two images are then viewed through the transparent substrate of the first hologram. The substrate of the second hologram need not be transparent but it will usually be more convenient to make it so.

Hologram Attachment to a Substrate

Several of the preceding examples of the use of holograms of various constructions call for attachment of a hologram to a substrate with an adhesive layer. One example is the structure of Figure 4, wherein a partially metalized hologram 17 is attached to a substrate 11 by an adhesive layer 27 in order to secure information 13 that is printed on the substrate 11. Other examples are shown in Figures 11, 12 and 13. When hologram replicas formed by a casting process are so attached to a substrate, it is preferred in security applications that the adhesive used has a bonding strength that is significantly greater than the bonding of internal hologram layers.

As discussed above, a typical technique of forming hologram replicas by casting involves casting the hologram surface relief pattern in a liquid resin coated onto a thin optically transparent film. After the resin is hardened by curing, a hologram results that has the resin hologram layer attached to the carrying film with a certain bonding strength that can be controlled somewhat by material and process choices. An adhesive is then chosen to attach the cast layer of the hologram (after metallizing) to the substrate with this bonding strength being much greater than that of the cast layer to the hologram carrying film.

There are at least two specific applications of this differential bonding. In a first, a cast hologram so adhered to a substrate has, as a final step, its

carrying film stripped away, thereby leaving the composite structure with the hardened cast layer exposed. Such a structure is very resistant to tampering since the cast layer has no integrity by itself. Any attempts to remove the thin and fragile cast layer will cause it to disintegrate. This makes it impossible for the hologram to be removed from a protected document or article and reused on as counterfeit item. In a second example, the carrying film is retained on the outside of the composite structure, when its additional protection is desired. The differential bonding also adds security to the structure of this second example since tampering with the hologram will initially result in the protective film being separated from the structure while the cast resin hologram layer remains attached to the substrate.

Although the present invention has been described with respect to its preferred embodiments, it will be understood that the invention is entitled to protection within the full scope of the appended claims.

The claims defining the invention are as follows:

1. An article, comprising a continuous, unperforated sheet carrying a hologram or diffraction pattern in the form of a number of discontinuous reflective areas with a density of substantially from 25 to 400 such areas per inch in at least one direction thereacross, said sheet being substantially transparent between said reflective areas in order to allow viewing therethrough, said discontinuous areas being characterized by reconstructing a recognizable light pattern by diffraction of incident light therefrom.

2. The article according to claim 1 which additionally includes a container having a plurality of walls wherein said sheet forms a portion of said wall in a manner that any contents of the container can be viewed therethrough.

3. The article according to claim 1 which additionally includes a substrate having visual information on one surface over which said sheet is affixed, thereby to allow viewing of the visual information layer through the substantially transparent regions of said sheet.

4. The article according to claim 3 wherein said discontinuous area hologram or diffraction pattern is further characterized by said reconstructed recognizable light pattern being viewable substantially only when said article is held in a manner that said sheet visual information is substantially not viewable.

5. The article according to claim 1 wherein a second hologram is formed on said sheet in areas thereof between said discontinuous areas, said second hologram being characterized by reconstructing a second recognizable light pattern by diffraction of incident light therefrom.

6. The article according to claim 1 wherein at least a portion of the sheet includes said hologram or diffraction pattern extending throughout in the form of a surface relief pattern with said discontinuous areas thereof being formed of light reflective material on said surface relief pattern.

7. An article having a substrate with visual information carried on at least a portion of one surface area thereof, and a hologram or diffraction grating device attached to said one surface, said device being attached to said at least one substrate surface area over at least a portion of said visual information, said device including a plurality of discontinuous reflective portions in excess of about 25 such portions

AUSTRALIAN PATENT OFFICE

per inch in at least one direction across an area thereof that, when illuminated with light, reflect at least a portion of such light to form a reconstruction of a light pattern recorded on said device, and said device being substantially transparent between said discontinuous reflective portions and positioned with said discontinuous reflective portions overlying said at least a portion of said visual information, thereby to both render said visual information visible through the device and allow viewing of the light pattern reconstructed from the device.

8. The article according to claim 7 wherein the size of the discontinuous reflective device portions and their spacing is such that said portions are substantially invisible at a normal reading distance.

9. The article according to claim 7 wherein said discontinuous reflective device portions have a density such that the total area covered by said reflective device portions is within a range of from ten to ninety percent of said device area.

10. The article according to claim 7 wherein said device includes a continuous surface relief pattern across at least said device area and containing information which forms a light pattern formed upon illuminating the device with polychromatic light, and wherein said discontinuous reflective device portions are formed of a pattern of substantially reflective areas applied to the surface relief pattern.

11. The article according to claim 7 wherein the visual information which is visible through said device includes characters representing information about an individual and a photograph of that individual.

12. A document having at least some visual information thereon protected from alteration, comprising a hologram or diffraction grating device firmly attached to said document over said at least some visual information, said device comprising a continuous surface relief pattern across a surface area of a substantially transparent layer, said surface relief pattern containing information of an image or other light pattern, and a discontinuous pattern of 25 or more regions per inch of substantially completely reflective material carried by said surface relief pattern in at least one direction across at least a portion of said surface area and said at least some visual information, said device being characterized by permitting, when illuminated with light, both the viewing of said at least some visual information therethrough and an

AUSTRALIAN PATENT OFFICE

image or other light pattern reconstructed from said surface relief pattern.

13. The protected document according to claim 12 wherein said reflective material consists primarily of a two-dimensional array of spots of said reflective material have a density such that said spots cover a range of from ten to ninety percent of said at least a portion of the device surface area.

14. The protected document according to claim 12 wherein said discontinuous pattern of reflective material consists essentially of individual discrete areas of reflective material that are small enough to result in them not being resolved by a viewer observing the visual information covered by the device.

15. The protected document according to claim 12 wherein said document is any of a passport, personal identification card or driver's license.

16. The protected document according to claim 12 wherein said device is further characterized by permitting the simultaneous viewing of the visual information and the image or other light pattern reconstructed from the surface relief pattern when the document is viewed straight on.

17. The protected document according to claim 12 wherein said device is further characterized by permitting reconstruction of said image or other light pattern with a maximum brightness substantially only when said document is reoriented from a normal position for viewing said visual information on the document.

18. The protected document according to claim 12 wherein said device is further characterized by permitting viewing of said image or other light pattern reconstructed from said surface relief pattern substantially only upon the document being tilted by the viewer to a position where the document is observed other than straight on.

19. The protected document according to claim 12 wherein the visual information on the document is oriented for observation with the document in a first rotatable position with respect to a line of vision from an observer and the document, and wherein said device is further characterized by permitting viewing of said image or other light pattern reconstructed from said surface relief pattern substantially only upon the document being rotated about said line of vision through an angle to a second rotatable position.

20. The protected document according to claim 19 wherein said

AUSTRALIAN PATENT OFFICE
TMS/28001

first and second rotatable positions are substantially ninety degrees apart from each other.

21. The protected document according to claim 12 wherein said reflective material is arranged in a pattern consisting primarily of a two-dimensional array of spots of said reflective material having a spacing within a range of substantially 85 to 200 spots per inch across said at least a portion of the device surface area and a density such that said spots cover substantially from 30 to 60 percent of said at least a portion of the device surface area.

22. The protected document according to claim 12 wherein said reflective material is arranged in a pattern consisting primarily of a two-dimensional array of spots of said reflective material having a spacing within a range of substantially 65 to 130 spots per inch across said at least a portion of the device surface area and a density such that said spots cover substantially from 15 to 30 percent of said at least a portion of the device surface area.

23. The protected document according to claim 12 wherein said reflective material is arranged in a pattern consisting primarily of a two-dimensional array of spots of said reflective material having a spacing within a range of substantially 65 to 200 spots per inch across said at least a portion of the device surface area and a density such that said spots cover substantially from 15 to 60 percent of said at least a portion of the device surface area.

24. The protected document according to any one of claims 13, 21, 22 or 23 wherein said spots are substantially circular in shape.

25. The protected document according to any one of claims 13, 21, 22 or 23 wherein said spots are made of an aluminum material and are of a thickness substantially within a range of from 200 to 400 Angstroms.

26. The protected document according to any one of claims 12, 13, 14, 15 or 23 wherein said device includes a hologram characterized by the image reconstructed from said surface relief pattern having a three dimensional aspect.

27. The protected document according to any one of claims 12, 13, 14, 15 or 23 wherein said device is attached to said document with its said surface relief pattern and reflective material positioned on a side of said transparent layer which faces said document.

28. The protected document according to any one of claims 12, 13, 14, 15 or 23 wherein said device is attached over substantially the

AUSTRALIAN PATENT OFFICE

entire extent of said document.

29. The article according to claim 7 wherein said substrate includes at least one opaque surface area that carries at least some of said visual information.

30. The article according to claim 29 wherein said device is attached to said substrate surface for the purpose of authentication, whereby alteration of the portion of the visual information that is covered by said device is made to be very difficult.

31. The article according to claim 7 wherein said discontinuous reflective device portions have a spacing within a range of substantially 85 to 200 such portions per inch in at least one direction across said device area, and with a density such that the total area covered by said reflective device portions is within a range of from 30 to 60 percent of said device area.

32. The article according to claim 7 wherein said discontinuous reflective device portions have a spacing within a range of substantially 65 to 130 such portions per inch in at least one direction across said device area, and with a density such that the total area covered by said reflective device portions is within a range of from 15 to 30 percent of said device area.

33. The article according to claim 7 wherein said discontinuous reflective device portions have a spacing within a range of substantially 65 to 200 such portions per inch in at least one direction across said device area, and with a density such that the total area covered by said reflective device portions is within a range of from 15 to 60 percent of said device area.

34. The article according to any one of claims 9, 31, 32 or 33 wherein said reflective device portions are substantially circularly shaped spots.

35. The article according to any one of claims 7, 9, 11 or 33 wherein said device includes a hologram characterized by the image reconstructed from said surface relief pattern having a three dimensional aspect.

36. The article according to any one of claims 7, 9, 11 or 33 wherein said device is attached over substantially the entire extent of said article one surface area.

37. A composite structure, comprising:

a substrate containing visual information across at least a portion

AUSTRALIAN PATENT OFFICE

of a first surface thereof,

a substantially transparent layer attached to said first substrate surface over at least a portion of said visual information,

a relief pattern formed substantially continuously across at least a portion of a surface of said layer that faces said first substrate surface, said surface relief pattern being characterized by diffracting incident light into a recognizable image or other light pattern, and

a discontinuous, substantially regular pattern of at least sixty-five reflective and substantially opaque material areas per inch extending in at least one direction across said substrate surface over said at least a portion of said visual information and positioned between said substrate and said substantially transparent layer, said reflective areas covering less than 60 percent of said at least a portion of said visual information,

thereby to render viewable in light reflected from the composite structure both said recognizable image or other light pattern and the substrate visual information.

38. The composite structure according to claim 37 wherein said reflective device portions are substantially circularly shaped spots in a two-dimensional pattern across said substrate surface.

39. The composite structure according to claim 38 wherein said surface relief pattern is a replica of a hologram and wherein the recognizable image or other light pattern diffracted therefrom includes an image having a three dimensional aspect.

40. The composite structure according to claim 38 wherein said layer is attached over substantially all of said first substrate surface.

41. The composite structure according to claim 38 wherein the visual information carried by said at least a portion of the first surface of the substrate is arranged to be viewed when the structure is oriented in one direction with respect to the viewer and wherein said surface relief pattern is further characterized by forming said image or other light pattern with a maximum brightness substantially only when the structure is oriented in a second position with respect to the viewer, said second position being significantly different from said first position.

42. The composite structure according to any one of claims 37 to 41 wherein said substrate is one of a group including a passport, personal identification card and driver's license.

AUSTRALIAN PATENT OFFICE

43. The combination structure according to any one of claims 37 to 41 wherein said reflective material areas are substantially totally reflective.

44. An article substantially as hereinbefore described with reference to the accompanying drawings.

45. A document substantially as hereinbefore described with reference to the accompanying drawings.

46. A composite structure substantially as hereinbefore described with reference to the accompanying drawings.

DATED this FIFTH day of JUNE 1991
American Bank Note Holographics, Inc.

Patent Attorneys for the Applicant
SPRUSON & FERGUSON

AUSTRALIAN PATENT OFFICE
JDH28001

29859/89

115

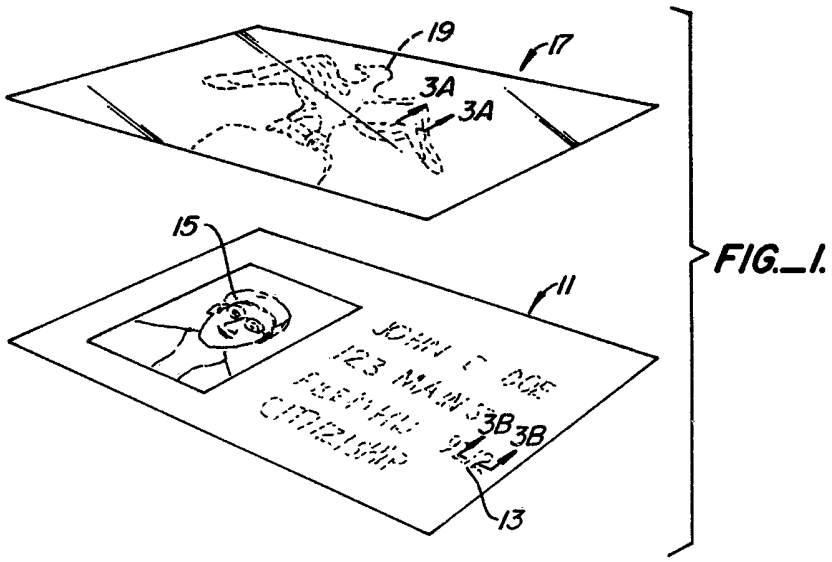

FIG._1.

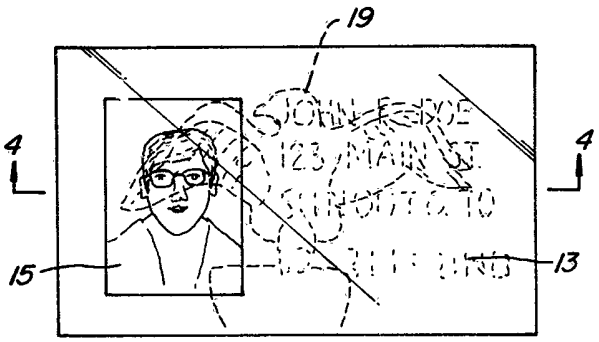

FIG._2.

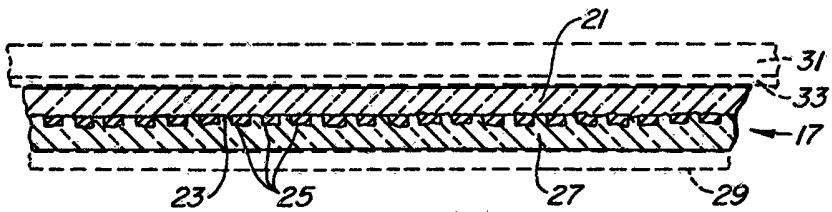

FIG._3A.



FIG._3B.

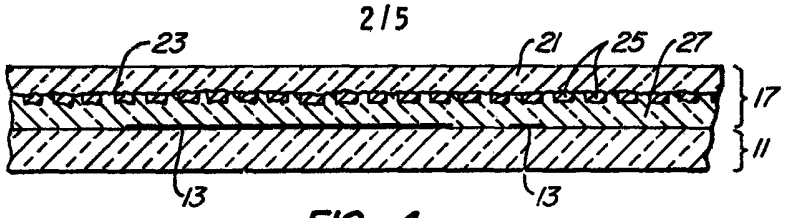

FIG._4.

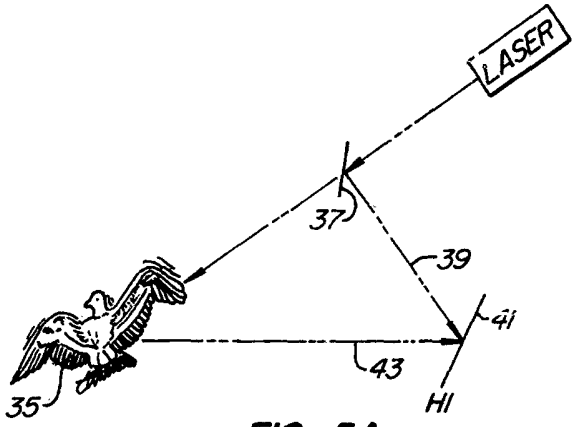

FIG._5A.

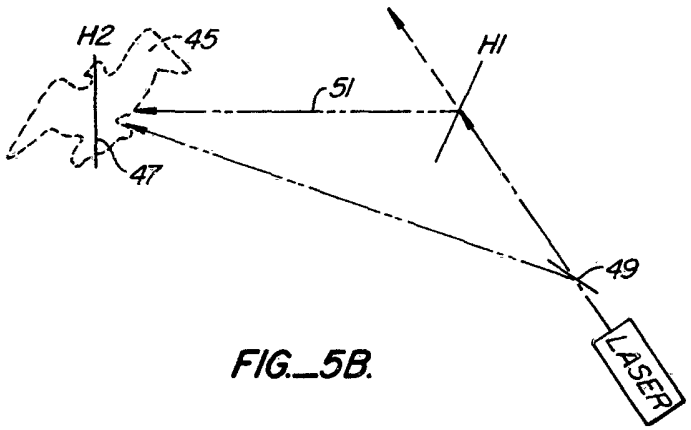

FIG._5B.

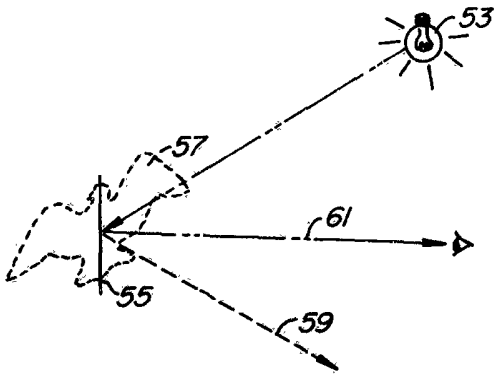

FIG._5C.

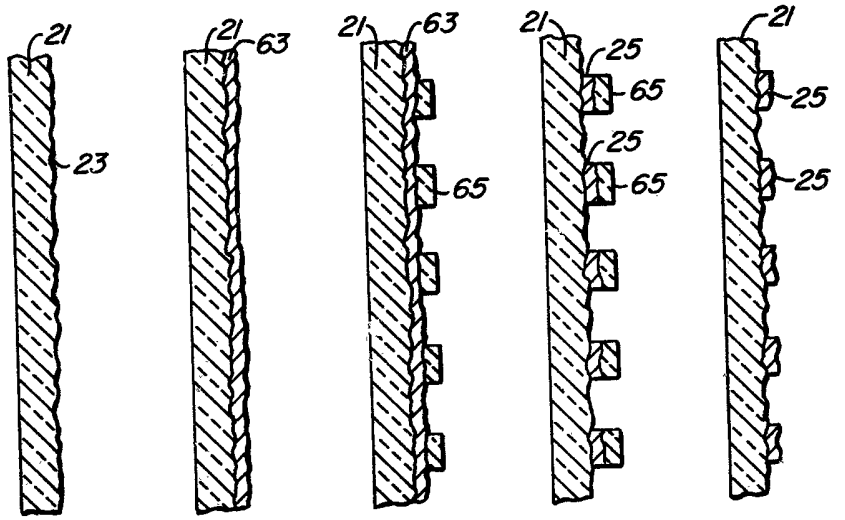

FIG._6A. FIG._6B. FIG._6C. FIG._6D. FIG._6E.

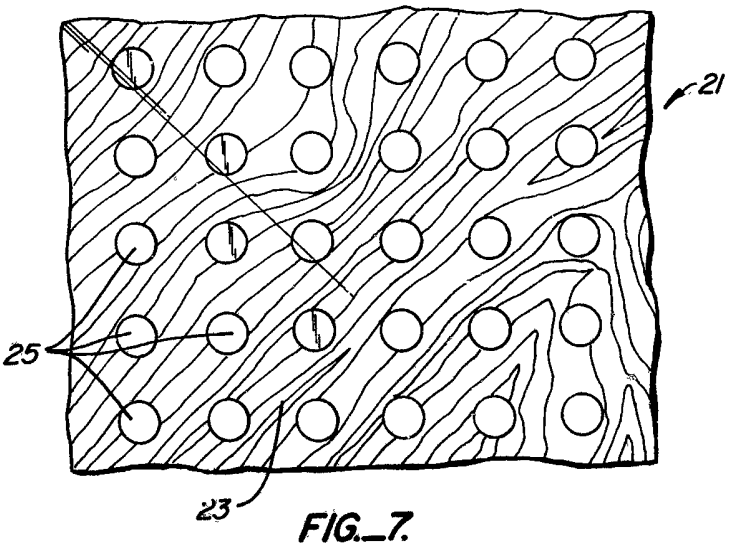

FIG._7.

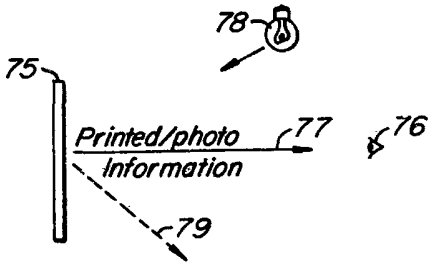

FIG._8A.

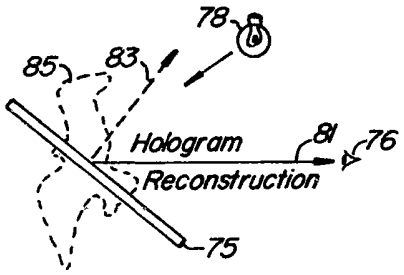

FIG._8B.

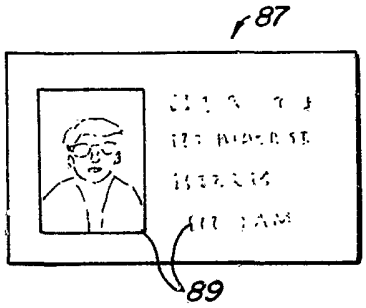

FIG._9A.

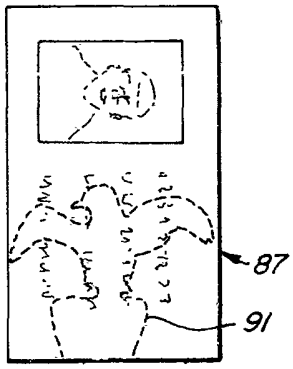

FIG._9B.

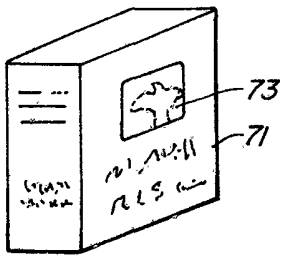

FIG._10.

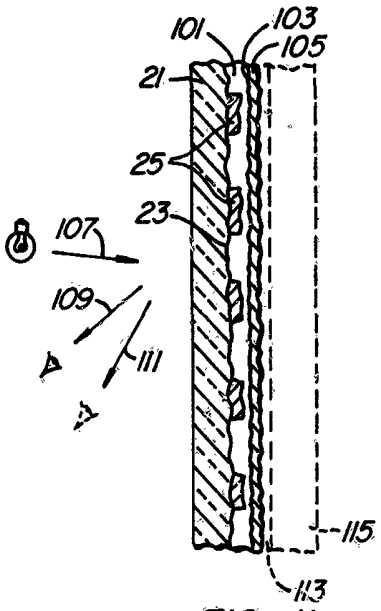

FIG._11.

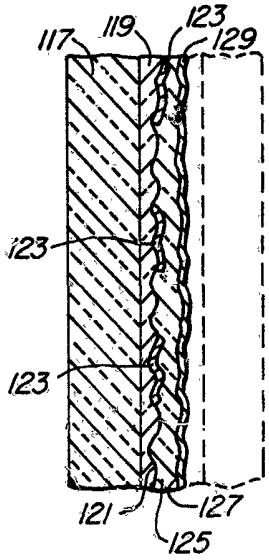

FIG._12.

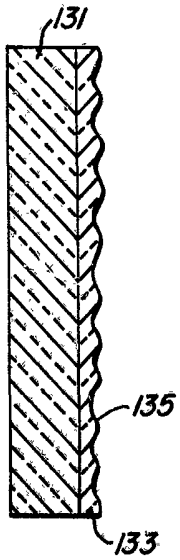

FIG._13A.

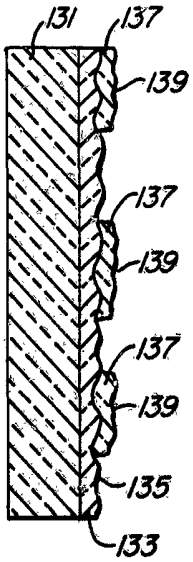

FIG._13B.

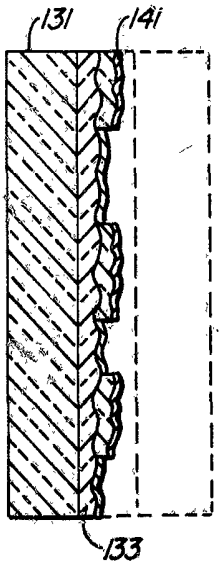

FIG._13C.