Nov. 23, 1965 J. L. MERCER ETAL 3,219,021

ENGINE STARTER

Filed April 27, 1964 2 Sheets-Sheet 1

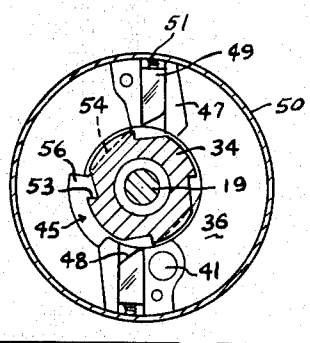

Fig-5

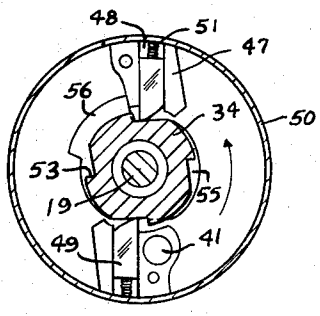

Fig-4

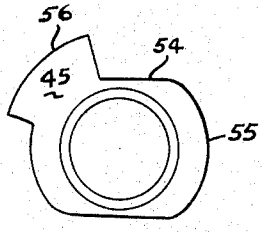

Fig-6

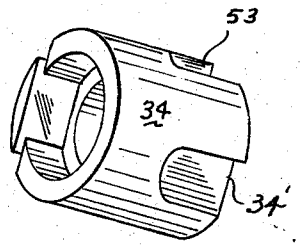

Fig-7

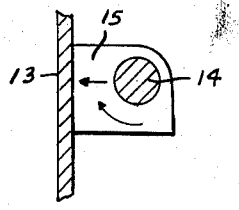

Fig-8

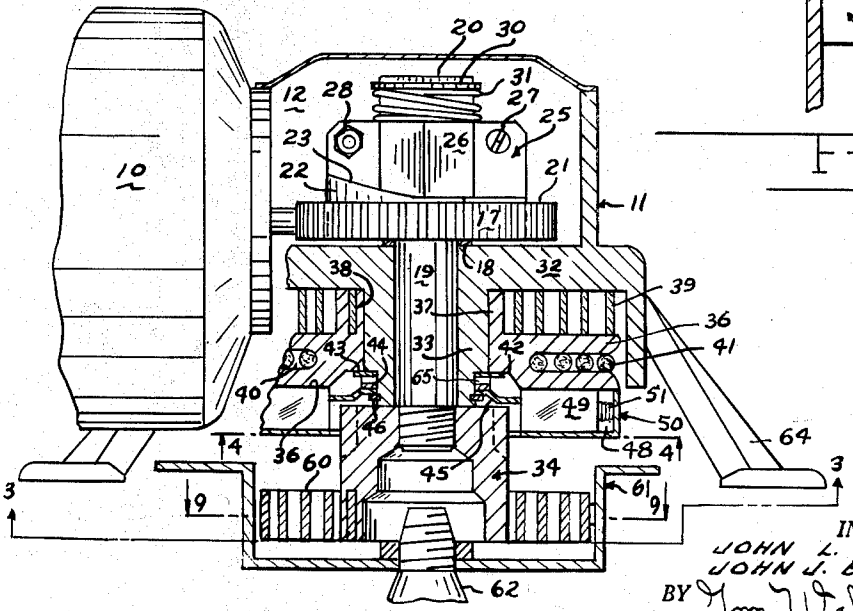

Fig-1

INVENTORS
JOHN L. MERCER
JOHN J. BRUNNER
BY Tom Walker
Jerome P. Bloom
ATTORNEYS

Nov. 23, 1965 J. L. MERCER ETAL 3,219,021

ENGINE STARTER

Filed April 27, 1964 2 Sheets-Sheet 2

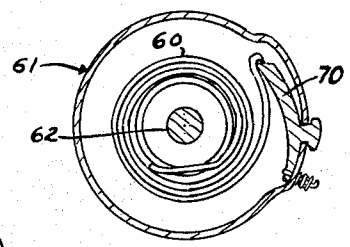

Fig. 9

Fig. 2

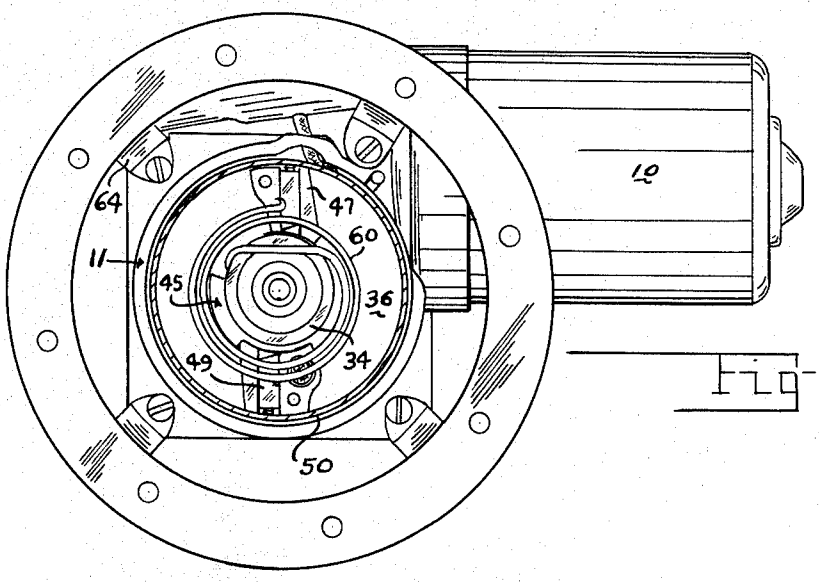

Fig. 3

INVENTORS
JOHN L. MERCER
JOHN J. BRUNNER
BY Tom Walker
Jerome P. Bloom
ATTORNEYS

United States Patent Office 3,219,021 Patented Nov. 23, 1965

3,219,021

ENGINE STARTER

John L. Mercer, Crabil Road, and John J. Brunner, 813 E. Southern Ave., both of Springfield, Ohio

Filed Apr. 27, 1964, Ser. No. 362,741
17 Claims. (Cl. 123—179)

This invention relates to engine starters of the type normally used on lawn mowers, small tractors and similar mechanized equipment. It provides a versatile starter mechanism which is selectively operable to facilitate a manual or a powered starting of an engine, as needs may require. Invention embodiments feature mechanism which obviates the incidence of damage thereto in the event of engine backfire. The invention further affords means precluding the interference of starter mechanism with the associated engine mechanism once the engine attains its normal operating function.

In the use of a selective starter system of the nature characterized by the present invention, one achieves a greater flexibility in the application and use of the small gasoline engine. Moreover, in fabricating a starter unit in accordance with the invention, one achieves an engine starter which is less subject to wear, malfunction and damage in use.

A primary object of the present invention is to provide an engine starter unit which is economically fabricated, more efficient and satisfactory in use, adaptable to a wide variety of applications and unlikely to malfunction.

A further object of the invention is to provide a selective starter mechanism which may be particularly adapted for use with small gasoline engines and the like.

Another object of the invention is to provide a starter unit for small engines and the like which may be selectively operated through the medium of either a manual or a powered impulse.

An additional object of the invention is to provide a starter unit for small gasoline engines or the like so formed to obviate the incidence of wear or damage in the event of engine backfire.

Another object of the invention is to provide an improved engine starter which will entertain a minimal amount of wear in use.

An additional object of the invention is to provide a starter unit affording a more positive driving impulse for initiating the operation of a small gasoline engine or the like.

Another object of the invention is to provide an engine starter which will positively disassociate itself from an engine as the engine is induced thereby to assume its normal operating function.

A further object of the invention is to provide an engine starter possessing the advantageous structural features, the inherent meritorious characteristics and the means and mode of operation herein described.

With the above and other incidental objects in view as will more fully appear in the specification, the invention intended to be protected by Letters Patent consists of the features of construction, the parts and combinations thereof, and the mode of operation as hereinafter described or illustrated in the accompanying drawings, or their equivalents.

Referring to the accompanying drawing, wherein is shown one but obviously not necessarily the only form of embodiment of the invention:

FIG. 1 of the drawings is a fragmentary schematic view, in longitudinal section, of an engine starter in accordance with the present invention;

FIG. 2 is a top view of the unit as shown in FIG. 1 with a cover plate removed to illustrate certain details;

FIG. 3 is a view in cross section taken on line 3—3 of FIG. 1 with certain details eliminated for clarity of disclosure;

FIGS. 4 and 5 are cross sectional views of the starter unit which respectively illustrate operative and inoperative positions of its manual drive mechanism being taken substantially along the line 4—4 of FIG. 1, and with a main housing omitted;

FIG. 6 is a detail plan view of a control cam utilized in conjunction with the mechanism illustrated in FIGS. 4 and 5;

FIG. 7 is a perspective view of a ratchet element;

FIG. 8 is a fragmentary schematic view of structure shown on line 8—8 of FIG. 2; and

FIG. 9 is a cross sectional view illustrating a clutch device by means of which the starter may actuate an associated engine, being taken substantially along the line 9—9 of FIG. 1.

Like parts are indicated by similar characters of reference throughout the several views.

The starter as shown in the drawings includes an electric motor **10** having at one end thereof a shell **11** forming a generally rectangular chamber **12**. Positioned adjacent and parallel to a wall **13** of the chamber **12** is a projected extremity of the motor drive shaft **14**. The outermost extremity of the shaft **14** extends through an Orlon bearing **15** arranged at right angles thereto. The bearing **15** has a flatted surface portion which abuts and bears against the adjacent wall **13**. Fixed on the shaft **14** immediately inward of the bearing **15** is a worm **16** arranged to mesh with a worm gear **17**. The worm and the associated gear **17** mutually occupy a transverse plane generally perpendicular to the wall **13**.

The gear **17** has a central aperture defined by a hub-like bearing portion **18** which receives therethrough a cylindrical shaft **19**. The shaft **19** has a relatively enlarged rectangularly formed end portion **20**. Noting FIG. 1 of the drawings, shaft portion **20** projects above the gear **17** and provides a shoulder abutted by such gear.

The face **21** of the gear **17** most adjacent the shaft portion **20** includes two circularly spaced, diametrically displaced, relatively projected ramps **22**. The ramps **22** are directed in the same sense. Each ramp has a gradually sloping exterior surface portion **23** which terminates, in abrupt fashion, in a wall portion **24** arranged perpendicular to the gear face **21**.

Slidably mounting on the shaft portion **20** is a split sleeve **25**. The sleeve **25** consists of two relatively opposed plate-like bars **26** the respective extremities of which coextensively abut. The middle portions of these bars have a V-shape and mutually depart to form a rectangular sleeve opening of a size to accept the shaft portion **20**.

Bolt type connector elements **27**, each having a head to one end and a threadedly engaged nut **28** to its other end, are projected through aligned apertures in the end portions of the bars **26**. Each element **27** mounts a coil spring **29** to either side of the bars **26** in a manner readily seen in FIG. 2 of the drawings. By means of the springs **29**, respectively contained against the bars **26** by means of a bolt head and a nut **28**, the bars **26** are normally biased to maintain their ends in coextensive abutting relation. This enables a drive of the shaft **19** through the medium of the sleeves **25** in a manner to be further described.

In FIGS. 1 and 2 of the drawings it may be seen that the outermost end of the shaft portion **20** is circumferentially notched to accommodate a retainer ring **30**. Positioned about the shaft portion **20** between the ring **30** and the sleeve **25** is a coil spring **31**. The spring **31**

is so formed to provide a bias of the sleeve **25** against the gear face **21**. On relative positioning of the sleeve **25** to dispose its respectively projected extremities clear of the ramp surfaces **23**, such extremities will seat to the gear face **21**, respectively in advance of a ramp wall **24**.

Thus, on energizing the motor **10** to drive the shaft **14** in an appropriate direction, the gear **17** will turn and, through the medium of the wall portions **24** of the ramps **22**, normally drive the respectively projected extremities of the sleeve **25**. Due to the normal bias containment of the bars **26** by the springs **29**, on drive of the sleeve **25** the shaft **19** will be driven therewith through the medium of its contained rectangular portion **20**. This affords a direct transmission of a starting or driving impulse to an associated engine through structure to be further described.

It should be readily seen that if circumstances should inadvertently produce a reversing impulse on the shaft **19**, this impulse would be transmitted to the sleeve **25** through the medium of the rectangular shaft portion **20**. As this occurs, the respective ends of the sleeve will be reversely moved until interrupted by an abutment with the oppositely driven wall surfaces **24** on the ramps **22**. On continuance of the reversing impulse, the counter-rotation of the rectangular shaft portion **20** will induce a spreading separation of the sleeve bars **26** against the influence of the springs **29**. This spreading accommodates the reversing impulse in a manner that one avoids a consequent damage to the starter mechanism herein described.

Viewing FIG. 1 of the drawings, intermediate its vertical extremities, immediately adjacent and spaced from the surface of gear **17** remote from its face **21**, the shell **12** is bridged by a transverse wall portion **32**. The wall portion **32** includes an aperture defined by a relatively dependent cylindrical hub portion **33** accommodating the shaft **19**. The shaft **19** includes a threaded end portion which projects from the hub **33** to be threadedly engaged by a tubular ratchet body **34**. The threaded engagement of the body **34** to the shaft **19** at the dependent extremity of hub **33** provides for their conjoint rotation and function in a manner to be further described. While the body **34** is made separable from the shaft **19** for convenience of manufacture and assembly it could be made unitary therewith if desired and is in effect a part of a shaft means.

The peripheral wall of the shell **11** depends in radially expanded concentrically spaced relation about the projected hub **33**. This forms an annular recess the base of which is defined by the wall section **32**. Nesting in this recess about and in bearing relation to the hub **33** is an annular casting **36**. One face of the casting **36** includes a hub **37** which in the operative position of the casting projects to relatively abut and bear on the wall section **32**. Hub **37** has a chord-like slot **38** by means of which it anchors one end of a concentrically coiled leaf spring **39**. The leaf spring **39** is conventionally coiled and includes, at its outermost extremity, a hook portion which conventionally anchors to suitable means on an adjacent wall portion of the shell **12**.

The casting **36**, which is relatively shallow from face to face, includes a relatively deep circumferential recess **40**. Opening through one face of the casting **36** from the inner end of the recess **40** is a passage, not shown. This passage accommodates the projection therethrough of one end of a control cable **41**, which end is knotted at the outer face of the casting. So anchored at one end, the cable **41** is coiled about itself in the recess **40** as evidenced in the drawings. The outermost end of the cable **41** is arranged to project through an opening in the peripheral wall of shell **12** in a plane common to that of the recess **40** where it is suitably anchored to an operator element **52**.

The face of the casting **36** remote from its hub portion **37** is recessed to form an annular shoulder **42** immediately about the hub **33**. Within this recessed portion of the casting, from a plane common to that of the shoulder **42**, the hub **33** has a uniformly reduced external diameter. Fixed about this reduced portion of the hub **33** to radially project and overlie the shoulder **41** is a retainer ring **43**. The ring **43** serves to contain the casting **36** so its hub portion **38** bears on the plate **32**. As a result, the spring **39** is confined to operate in a limited plane immediately adjacent the plate **32**.

A friction washer **44**, applied about the reduced portion of the hub **33**, is spaced from the retainer ring **43**, by a spring washer **65** and followed by a generally annular cam plate **45**. The plate **45** is held to the hub by a conventionally engaged retainer ring **46**. Noting FIG. 1 of the drawings, the cam plate **45** is thereby positioned adjacent the outer or lowermost end of the hub **33**, spaced outwardly of the lowermost face of the casting **36** and immediately adjacent the ratchet body **34**. The spring washer **65** puts pressure against the friction washer **44** and, in turn, against the cam plate **45** whereby to frictionally hold the cam plate from rotative movement.

Formed integral with one face of the casting **36** and radially outward of the adjacent end portion of the ratchet body **34** and the cam plate **45** are diametrically opposed pairs of parallel projections **47**, each pair forming a guide slot **48**. Slidably mounted in each of the guide slots **48** is a ratchet bar **49**. The ratchet bars **49** are retained in slots **48** by means of a cap **50** which is suitably fixed to the casting. Springs **51** are interposed between the radially outermost ends of the bars **49** and the peripheral wall of the cap **50**. The springs **51** bias the bars **49** inwardly to the cam plate **45** and the adjacent portion of the ratchet body **34**, the inward bias being limited by the peripheral contour of the cam plate. The peripheral surface portion of the body **34** in the path of the bars **49** includes circumferentially spaced notches **34'** providing chord-like flatted surface portions terminating in generally perpendicular wall segments **53**. The wall segments **53** all have a generally radial orientation for cooperation with the outer ends of the ratchet bars **49** in a manner to be described.

Noting FIGS. 4 through 6 of the drawings, it may be seen that the outer periphery of the annular cam plate **45** includes diametrically opposite flats **54** and, to either end thereof, relatively projected arcuate portions **55**, one of which includes a further projected arcuate segment **56**. Further, the extremities of the bars **49** which are radially innermost and adjacent the cam plate **45** include toothed ends, one side of each toothed end being flatted in a radial sense. The flatted portions of the bars **49** are arranged to oppose the wall segments **53** of the ratchet body **34** for purposes which shall soon become obvious.

As may be seen from the drawings, the operating handle **52** is normally biased inwardly of the shell **12** under the influence of the spring **39**. In this position of the handle, a guide projection **47** on casting **36** abuts arcuate segment **56** on cam plate **45**. At this time the cam portions **55** are so positioned to cam the bars **49** inwardly of their guide slots **48**, clear of the ratchet body **34**. In the event of a manual starting impulse being required, on pulling the handle **52**, the cable **41** causes the casting **36** to turn until an opposite guide projection **47** hits the flat opposite edge of the cam plate projection **56** whereupon the plate **45** is induced to turn with the casting. With the cam in this latter position in relation to the casting **36**, flats **54** dispose opposite the bars **49**. This permits the bars **49** to project under the influence of the biasing springs **51** and engage in the adjacent notches in the ratchet body **34**, the flatted surfaces of the bars disposing to engage and drive the ratchet body through the medium of the wall segments

53. This produces a drive of the shaft 19 through the medium of the ratchet body. There is no interference with this procedure since the relation of the sleeve 25 to the shaft portion 20 permits it to freely move with the shaft 19 and in the process thereof to cam up and over the slopes of the ramps 22 without interference therefrom.

On release of the operator member 52 which affords a manual impulse to the starter mechanism, cable 41 is coiled under the influence of the spring 39. The casting 36 turns therewith and it moves relative the cam 45 until the projection 56 has its first-mentioned flatted portion in its original abutting position to a guide bar 47. At this point the arcuate cam portions 55 arrive at a position to cam bars 49 inwardly of the slots 48, clear of the ratchet body 34 in a manner believed obvious.

Ratchet body 34 has a chord-like slot by means of which it anchors a hook extremity on one end of a coiled clutch spring 60. The spring 60 nests relative a cup 61 suitably secured to an engine crankshaft 62. Fixed in this cup is a biased dog member 70 (FIG. 9) which positions in the path of the hook on the other or outer end of the spring 60. Thus as a drive is effected in any instance through the ratchet body 34, the spring 60 turns therewith and its outer hook extremity engages the dog 70 in the cup 61 and through the medium of the dog causes the cup 61 to turn therewith. In view of the fact that the cup 61 is fastened to the engine crankshaft, one achieves a driving or starting impulse which is transmitted to the associated engine mechanism. Details of the engine structure are not disclosed since they constitute no particular part of the present invention. However, noting FIG. 1 of the drawings, the shell 12 includes support legs 64 by means of which it may be fixed to the engine housing outwardly of and relatively about the engine crankshaft. The specifics of the clutch mechanism are not important to the invention. However, by way of example, the means by which the starter mechanism may be clutched to the associated engine may be such as shown in our United States Letters Patent 3,070,081.

In the event a manual starting impulse is transmitted to the associated engine through the medium of the ratchet body 34 and engine backfire should occur, this backfire will be indicated by a reverse drive of the ratchet body and the shaft 19 therewith. In such event, the sleeve 25 will separate under the influence of the shaft portion 20 in the manner as described with reference to the transmission of a powered impulse for starting of the engine.

It should be here noted that a manual starting may be effected without interference from the ramps 22 and the gear face 21. This is due to the fact that on transmitting the starting impulse, it is in a direction that the sleeve 25 will freely cam over the ramp surfaces in a sense to avoid any interference therefrom.

Further, it will be noticed that here the invention provides for a selective starting through the medium of a powered impulse or a manual impulse, as circumstances or needs may require. Whether the starting is influenced manually or from a power source, it will be apparent that the cam plate 45 functions to prevent any interference by the ratchet dogs 49. It should be obvious that when the bars 49 are required to transmit a manual impulse to drive the ratchet body 34 and offer a starting impulse to an engine therethrough, once the operator element 52 is released, the ratchet bars are clear of the ratchet body and on starting of the engine there is no projection or riding of the ratchet bars in reference to the ratchet body.

In summary, the starter mechanism of the invention is selectively operable from a power source or a manual control. In either event, on the occurrence of backfire, the sleeve 25 is such to avoid any damage to the starter mechanism. In the event of manual control of the starter mechanism, the controls are such that they recess when the engine takes over and thereby avoid noise and starter wear in the process of the engine operation.

Based on the preceding, it may be seen that the starter unit of the invention is extremely versatile in character and widens the scope of application of the gas engine to which it connects. Not only is the present starter mechanism versatile in character but it is also simple to fabricate and more efficient and satisfactory in use.

From the above description it will be apparent that there is thus provided a device of the character described possessing the particular features of advantage before enumerated as desirable, but which obviously is susceptible of modification in its form, proportions, detail construction and arrangement of parts without departing from the principle involved or sacrificing any of its advantages.

While in order to comply with the statute the invention has been described in language more or less specific as to structural features, it is to be understood that the invention is not limited to the specific features shown, but that the means and construction herein disclosed comprise but one of several modes of putting the invention into effect, and the invention is therefore claimed in any of its forms or modifications within the legitimate and valid scope of the appended claims.

Having thus described our invention we claim:

1. An engine starter including a housing, shaft means rotatably mounted in said housing, said shaft means having to one end thereof a rectangular portion and to the other end a ratchet element, sleeve means having a releasable connection bearing on said rectangular portion of said shaft means, power drive means operatively related to said sleeve means whereby on energization of said drive means said shaft means may be driven through said sleeve means to transmit a starting impulse to an engine crankshaft, ratchet means mounting in said housing, said ratchet means being normally disengaged from said ratchet element, and manually controlled means selectively operable to cause said ratchet means to engage said ratchet element whereby to drive said shaft means independent of said power drive means.

2. An engine starter as set forth in claim 1 characterized by said sleeve means including a split sleeve, the portions of which are normally respectively biased to assume a containing and driving relation to the rectangular portion of said shaft means and rendered operative thereby on transmission of a starting impulse therethrough and the occurrence of engine backfire to per se accommodate the shaft reversing impulse produced by the engine backfire.

3. The starter structure as set forth in claim 2 characterized by said manually controlled means including cam means within said housing arranged to control said ratchet means and to disengage said ratchet means from said ratchet element subsequent and responsive to a termination of the operation of the manually controlled means.

4. An engine starter comprising a housing, a motor mounted to said housing having a drive shaft projected within said housing, a worm on said drive shaft, shaft means rotatably mounting in said housing and orienting in a sense perpendicular to and offset from said drive shaft, a worm gear being in said housing and mounted for rotation about a portion of said shaft means, a floating bearing accommodating the projected extremity of said drive shaft, said floating bearing having a flatted portion in bearing abutment with a wall of said housing and arranged thereby to maintain a positive driving mesh of said worm to said worm gear and means on said shaft means and on said worm gear operable to interengage on energizing of said motor whereby to produce a starting impulse which is transmitted through said shaft means to an engine crankshaft.

5. The structure as set forth in claim 4 characterized by said means on said shaft means including portions arranged to functionally separate from said shaft means in the event of engine backfire.

6. An engine starter including, a housing, a shaft means therein, a gear rotatable about said shaft means, at least a single means projected from said gear in a sense displaced radially outward of said shaft means including a cam surface and an abutment surface, means positioned about and slidable on said shaft means biased to have portions seat to said gear in the path of said abutment surface, said last named means normally having a driving relation to said shaft means and operable on engagement by said abutment surface to drive said shaft means, and further means selectively operable to drive said shaft means including ratchet elements operative to interengage with a portion of said shaft means and effect a drive therethrough in the process of which said means slidable about said shaft means will move freely over said cam surface, said shaft means being arranged, on drive thereof, to transmit a driving impulse to an engine crankshaft or the like.

7. An engine starter for small gasoline engines and the like including a drive shaft, a worm thereon, a worm gear, means providing a floating bearing accommodating said drive shaft and arranged on drive of said drive shaft to maintain a positive engagement of said worm with said gear, a second shaft, said gear having a rotatable mount about said second shaft, means on said second shaft and said gear interrelating in response to an energization of said drive shaft to drive said second shaft by the medium of said gear, at least one of said interrelating means including split portions operative on an impulse being applied to reverse the rotation of said second shaft to separate and avoid damage to the starter mechanism thereby.

8. An engine starter comprising a housing, shaft means rotatably mounted in said housing and adapted to be clutched to an engine crankshaft or the like, said shaft means including a body portion having circumferentially spaced notches, a plate structure mounted for rotation about said shaft means in said housing having guide means thereon, spring biaised dogs arranged in said guide means, the bias on said dogs normally causing them to project inwardly in the direction of the circumferentially spaced notches in said body portion of said shaft means, means mounting in said housing to normally retain said dogs in a position free of said body portion of said shaft means and adapted on rotation of said plate structure to free said dogs for a driving engagement with the body portion of said shaft means whereby on rotation of said plate structure a starting impulse will be transmitted to the engine crankshaft.

9. An engine starter comprising a housing, a shaft means rotatably mounting in said housing, said shaft means being adapted to be clutched to an engine crankshaft or the like, means in said housing providing a bearing for said shaft means, a plate means rotatably mounting about a portion of said bearing and relative said shaft means, a manual drive means in connection with said plate means for rotating said plate means about said bearing, spring means interposed between said plate means and said housing to resiliently resist and accommodate a rotation of said plate means, spring biased dogs mounted in connection with said plate means and adjustable relative thereto in a radial sense, a cam plate in connection with and adjustable on said bearing, portions of which control the position of said dogs, means on said shaft means in the path of said dogs normally disengaged therefrom, said cam plate operating on rotation of said plate means to free said dogs for engagement with a portion of said shaft means whereby on rotation of said plate means said dogs will produce a drive of said shaft means to transmit a starting impulse to the associated engine crankshaft.

10. The structure as set forth in claim 9 characterized by said cam plate including a peripheral contour having diametrically opposed flatted portions and, to either end thereof, arcuately projected end portions, the positioning of said flatted portions in the path of said dogs enabling the projection of said dogs into driving engagement with said shaft means, said shaft means including a portion provided with circumferentially spaced notches to accommodate said dogs in driving engagement therewith.

11. The structure as set forth in claim 10 including a peripherally projected portion on said cam plate and projected means on said plate means cooperating to provide that on rotation of said plate means the flatted portions of said cam plate will be disposed oppositely said dogs and on termination of the rotation the arcuate projected end portions of said cam plate will cam said dogs free of said shaft means.

12. An engine starter unit including a housing, a motor on said housing having a drive shaft which projects therein, a worm on said drive shaft, a worm gear in said housing, means in said housing operative to maintain a positive engagement of said worm with said gear, cam means incorporated on and projected from one face of said gear, a shaft providing a pivot mount for said gear, means in connection with said pivot shaft providing for a clutching engagement thereof to a related engine crankshaft, said pivot shaft having a rectangular portion, means defining a split sleeve slidably mounting on the rectangular portion of said piovt shaft adjacent said one face of said gear, said split sleeve being normally arranged to have a driving engagement with the rectangular portion of said pivot shaft, spring means biasing said sleeve to normally dispose portions thereof in the path of said cam means, said cam means providing means which on energizing of said motor will drive said pivot shaft through the medium of said sleeve and means holding said sleeve in its assembled relation arranged to accommodate the separation of its respective portions in response to a reverse rotation of said pivot shaft under the influence of an engine backfire.

13. The structure as set forth in claim 12 characterized by said pivot shaft further having means in connection therewith including peripherally notched portions and having means rotatable thereabout including ratchet elements operative to engage in said notches and drive said shaft means thereby.

14. A starter unit as set forth in claim 13 characterized by a cam ring adjustable about said pivot shaft normally positioned to prevent said ratchet elements to engage in said notches and operable on rotation of said rotatable means to displace from said ratchet elements whereby said ratchet elements will automatically engage in said notches for drive of said shaft means thereby.

15. An engine starter, comprising driving and driven shafts in end to end relation, a cylindrical sleeve member secured to one end of said driving shaft and extending toward said driven shaft, a driving connection between said cylindrical member at one end thereof and said driven shaft, the opposite end of said cylindrical member being formed as a ratchet wheel, a housing body mounting said driving shaft for relative rotation, pulley means rotatable on said housing in surrounding relation to said driving shaft, movable dog means carried by said pulley means and biased to engage said ratchet wheel, and a cam plate on said housing in surrounding relation to said driving shaft, said plate being in the plane of movement of said dog means and having a peripheral configuration presenting circumferentially spaced apart cam and flat portions, said cam and flat portions being disposed alternately opposite said dog means in response to rotation of said pulley means to hold said dog means disengaged from said ratchet wheel and to allow such engagement, said cam portion being normally opposite said dog means, initial turning motion of said pulley means bringing said dog means opposite said flat portion, and means responding to continued turning motion of said pulley means to maintain said flat portion opposite said dog means.

16. An engine starter according to claim 15, characterized in that said last named means comprises an abutment portion forming a further part of the peripheral configuration of said cam plate and in adjacent relation

to said flat portion thereof, said pulley means having means to engage said abutment portion upon the initial turning motion of said pulley means, said cam plate being rotatable on said housing for motion with said pulley means during continued turning motion thereof.

17. An engine starter, comprising a shaft having means in connection therewith for transmitting a starting impulse to an engine crankshaft, said shaft having a portion of rectangular configuration, a pair of oppositely disposed plate elements formed to have mating portions thereof contain the rectangular portion of said shaft elements, means including a spring means operating on said plate elements to normally maintain the mating portions thereof in containing relation to the rectangular portion of said shaft element, means operable on said plate elements to rotate said elements in one direction and thereby to drive said shaft element through the medium of its contained rectangular portion to transmit a starting impulse to the

engine crankshaft, said last named means restraining said plate elements against rotation in the opposite direction, whereby, on the occurrence of engine backfire, said plate elements are operative to separate in opposition to the bias of said spring means thereon and thereby accommodate the reversing impulse produced by engine backfire.

References Cited by the Examiner

UNITED STATES PATENTS

1,721,807	7/1929	Eisiminger et al.	123—79
1,882,594	10/1932	Heuner	123—185
2,939,448	7/1960	Hansen	123—179
2,950,780	8/1960	Millar	185—41

SAMUEL LEVINE, *Primary Examiner.*

RICHARD B. WILKINSON, *Examiner.*