(No Model.)

O. BEEBE.

SASH HOLDER.

No. 456,078. Patented July 14, 1891.

Fig. 1.

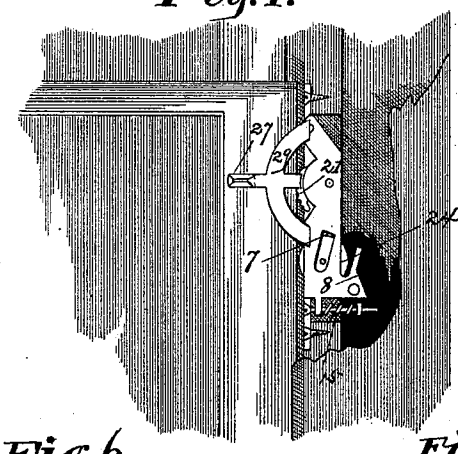

Fig. 2.

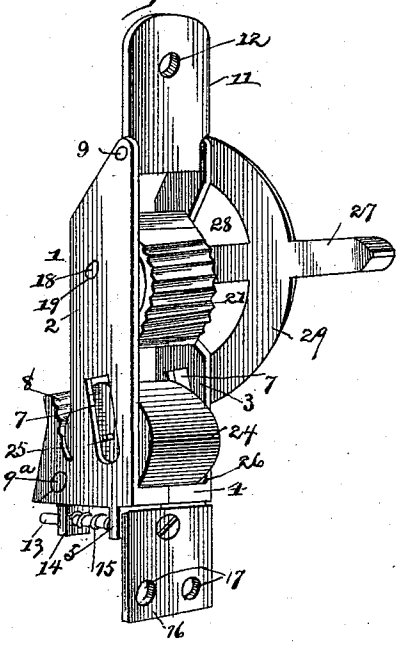

Fig. 6.

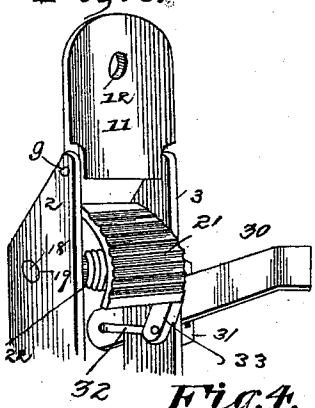

Fig. 5.

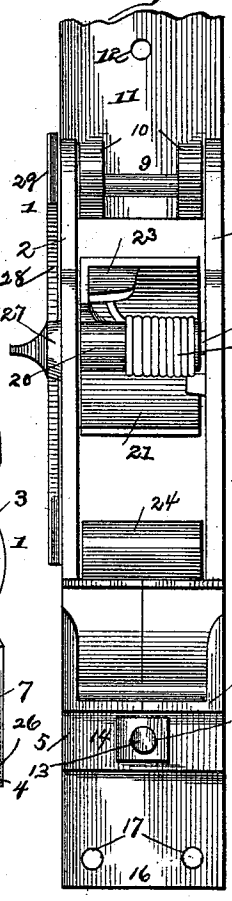

Fig. 3.

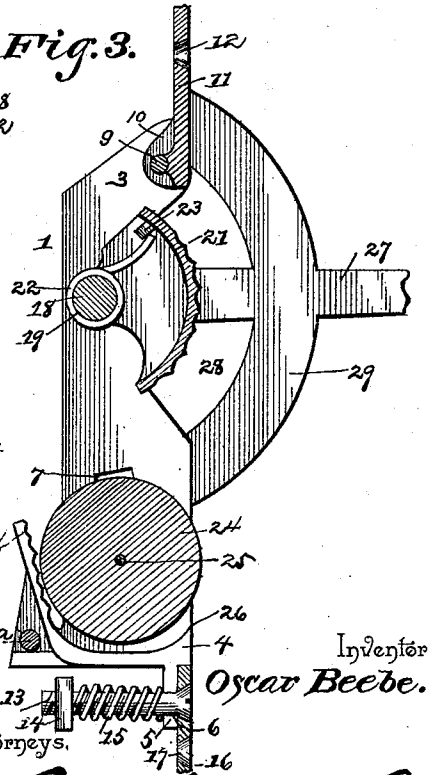

Fig. 4.

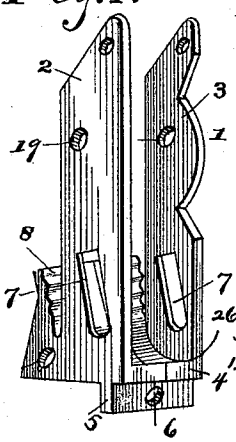

Witnesses

B. S. Ober.

W. S. Dewey.

Inventor

Oscar Beebe.

By his Attorneys.

C. A. Snow & Co.

THE NORRIS PETERS CO., PHOTO-LITHO., WASHINGTON, D. C.

UNITED STATES PATENT OFFICE.

OSCAR BEEBE, OF HORNELLSVILLE, NEW YORK, ASSIGNOR OF ONE-HALF TO EDWARD F. WILLETS, OF SAME PLACE.

SASH-HOLDER.

SPECIFICATION forming part of Letters Patent No. 456,078, dated July 14, 1891.

Application filed January 21, 1891. Serial No. 378,571. (No model.)

To all whom it may concern:

Be it known that I, OSCAR BEEBE, a citizen of the United States, residing at Hornellsville, in the State of New York, have invented a new and useful Sash Lock and Holder, of which the following is a specification.

This invention relates to a combined sash lock and holder, the objects in view being to provide in one single, simple, inexpensive device means for positively and securely locking a window-sash at any point, whether closed or opened, and to provide means for temporarily supporting the sash when the same is elevated and has been unlocked, whereby said sash is prevented from falling by its own weight.

Other objects and advantages of the invention will appear in the following description, and the novel features thereof will be particularly pointed out in the claims.

Referring to the drawings, Figure 1 is a side elevation of a combined sash lock and holder constructed in accordance with my invention and showing it applied in position. Fig. 2 is a perspective of the device as removed from the sash. Fig. 3 is a vertical longitudinal section of the same. Fig. 4 is a perspective view of one of the housing-sections. Fig. 5 is a rear elevation of the device. Fig. 6 is a perspective view of the upper end of a modified construction of a lock and holder.

Like numerals of reference indicate like parts in all the figures of the drawings.

In practicing my invention I construct a housing 1, preferably of two cast-metal longitudinal sections 2 and 3, respectively, and the same are provided at their lower ends with inwardly-disposed meeting flanges 4, from the under sides of which depend vertical flanges 5, the meeting edges of which are each provided with a semicircular opening 6, said vertical flanges 5 being set back a very slight distance from the face of the housing. The opposite sections or side walls are each provided with an inclined slot 7, and in rear of the same with a pair of inclined walls 8, the inner faces of which are transversely corrugated or roughened, as shown. The two sections are connected at their upper ends by a transverse pin 9, which also passes through the bearing-ears 10, formed upon the rear face near the lower end of a securing-plate 11, said plate being provided with one or more screw-holes 12, and at their lower ends the sections are secured together by a bolt 9^a. A threaded bolt 13 passes through the opening 6, formed in the flanges 5, and has mounted upon its rear threaded end an adjusting-nut 14, interposed between which and the flanges 5 is a coiled spring 15. The bolt also passes through a lower securing-plate 16, having screw-holes 17, said plate, by the bolt 13, being yieldingly connected to the housing.

Bearing-trunnions 18 are journaled in perforations 19, formed in the opposite side sections near their upper ends, said trunnions being formed on the ends of a transverse shaft or hub 20, from one end of which there extends a segmental cam 21, eccentric with relation to the hub and of a width adapting the same to loosely fit between the sections of the housing. A coiled spring 22 extends around the hub or shaft 20. Has one end fastened to the section 2 and the opposite end bearing against a lug 23, formed upon the under side of the cam 21.

24 designates a preferably wooden roller provided with trunnions 25. The roller is located in the lower end of the housing and fits loosely between the sides 2 and 3 and normally remains in a curved seat 26, formed in the bottom of the housing in front of the corrugated inclined wall 8.

From one side of the cam-eccentric 21 there extends forwardly a handle 27, the connection of which with the cam eccentric forms a shoulder, which rides in a curved recess formed in the front edge of the section 3, the ends of the recess forming a stop for the lever or handle in its movement. The handle is provided at opposite sides with curved arms 29, which take at the outside of the casing.

This completes the construction of my combined lock and holder for sashes, and the operation of the same is as follows: The device is set into an opening or recess formed in the jamb of the window-frame, the length of the recess being slightly greater than that of the casing or housing, and screws are passed through the securing-plates into the jamb. The nut 14, fitting against the under side of the housing, is maintained thereby from turn-

ing, and by using a screw-driver upon the end of the bolt 13 said bolt may be located and the nut made to travel toward or away from the head of the bolt, and thus increase or decrease the tension of the spring 15. In mounting the sash in the jamb-frame the lever of the fastener is depressed against the tension of its spring, so as to bring the upper flat face of the cam opposite the sash-frame. The sash may be raised without touching the lever, the wooden roller readily traveling to the rear and permitting of such movement. After the sash has reached a suitable height the lower portion of the corrugated cam is thrown automatically outward against the side rail of the sash, against which latter it binds. It is now impossible to lower the sash without first depressing the lever and again bringing the plain upper face of the cam into juxtaposition with the side rail of the sash. When this has been done, the sash is released and would fall by its own weight were it not for the wooden roller loosely seated and located at the lower end of the housing. This roller is prevented from rotating and thus releasing the sash and permitting it to fall and shiver the panes of glass by reason of the rear inclined corrugated wall 8. To close the window, the lever must be depressed and some force exerted to force the window down, which latter movement causes the side rail of the sash to force the housing inwardly, the same readily yielding by reason of the flexible or loose connection between the ends of the plates and the housing. After the window has been lowered the cam acts to relock it in the same manner as heretofore described.

From the above description it will be apparent that I have provided a cheap and simple combined holder and lock to be used upon unweighted windows, and which will prevent the falling of the window when unlocked, and will automatically lock the same in any of its positions.

The plate 29 and arm or lever 27 may be omitted, and in lieu thereof a lever 30 may be mounted loosely in a bracket 31, and have its rear end loosely connected by a link or rod 32 to an arm 33 extending down from the lower end of the cam 21.

Having described my invention, what I claim is—

1. The herein-described combined sash lock and holder, consisting of the oblong housing terminating at its lower end in a seat and having its opposite side walls provided with inclined slots, a roller seated in the seat and having trunnions extending into the slots, a shaft journaled in the side walls of the housing above the slots, a segmental cam extending from the shaft and provided with a handle and upon its under side with a stop-lug, and a coiled spring coiled about the shaft, secured at one end to the housing and at its opposite end terminating against the lug, substantially as specified.

2. The herein-described combined lock and holder, the same consisting of the oblong housing, the upper and lower securing-plates loosely connected thereto, a spring for pressing the housing to the front, the cam for binding against the sash, and the roller mounted in a curved seat in the bottom of the housing and adapted to travel up an inclined rear corrugated wall, substantially as specified.

3. The herein-described casing for the combined lock and holder, the same consisting of the housing formed of opposite cast-metal sections, each provided with lower inwardly-disposed bottom flanges below the same, with depending flanges having semicircular corresponding recesses at their inner edges, said bottom flanges combining to form a curved seat, a securing-plate having perforations located between the upper ends of the sections, a bolt passing therethrough, a securing-plate located at the lower end of the housing, a loose bolt passing therethrough and through the semicircular recesses of the depending flanges, a nut upon the bolt, and a spring between the nut and depending flanges, substantially as specified.

4. The herein-described housing having upper and lower securing-plates loosely connected thereto, a spring adjustably mounted in rear of the housing and adapted to force the same outwardly, and sash-locking devices mounted in the housing, substantially as specified.

5. The herein-described combined sash lock and holder, comprising the upper and lower securing-plates 11 17, the housing pivoted to the upper plate 11 and having a spring connection with the lower plate 17, and the sash-locking devices mounted in the housing, substantially as described.

In testimony that I claim the foregoing as my own I have hereto affixed my signature in presence of two witnesses.

OSCAR BEEBE.

Witnesses:
C. K. MASON,
E. F. WILLETS.