United States Patent [19]

Andersson

[11] **Patent Number: Des. 290,099**

[45] **Date of Patent: ** Jun. 2, 1987**

[54] **CHRISTMAS TREE STAND**

[76] Inventor: **Per O. Andersson,** Box 310, 820 77 Gnarp, Sweden

[**] Term: **14 Years**

[21] Appl. No.: **666,995**

[22] Filed: **Oct. 31, 1984**

[30] **Foreign Application Priority Data**

May 7, 1984 [SE] Sweden 84-1435

[52] **U.S. Cl.** **D11/130.1;** D11/182; 47/40.5

[58] **Field of Search** D11/130.1, 117, 118, D11/130, 144; 248/519, 523, 529; 211/196, 205; 47/40.5; 428/18, 19, 20; 362/123

[56] **References Cited**

U.S. PATENT DOCUMENTS

D. 174,421	4/1955	Ford	D11/130.1
2,500,215	3/1950	Swearingen	47/40.5
3,023,725	3/1962	Boyd	248/519 X
3,403,877	10/1968	Gudmundson	248/523
4,569,151	2/1986	Hoffbeck	248/519 X

OTHER PUBLICATIONS

Hardware Age, Aug. 2, 1956, p. 82, top right, Christmas Tree Stand-cylinder with 3 welded legs, set screws.

Primary Examiner—Winifred E. Herrmann
Attorney, Agent, or Firm—George F. Bethel; Patience K. Bethel

[57] **CLAIM**

The ornamental design for a Christmas tree stand, as shown and described.

DESCRIPTION

FIG. **1** is a top, front, and right side perspective view of a Christmas tree stand showing my new design;
FIG. **2** is a top, rear, and left side perspective view thereof;
FIG. **3** is a top plan view thereof;
FIG. **4** is a bottom plan view thereof; and
FIG. **5** is a left side elevational view thereof.

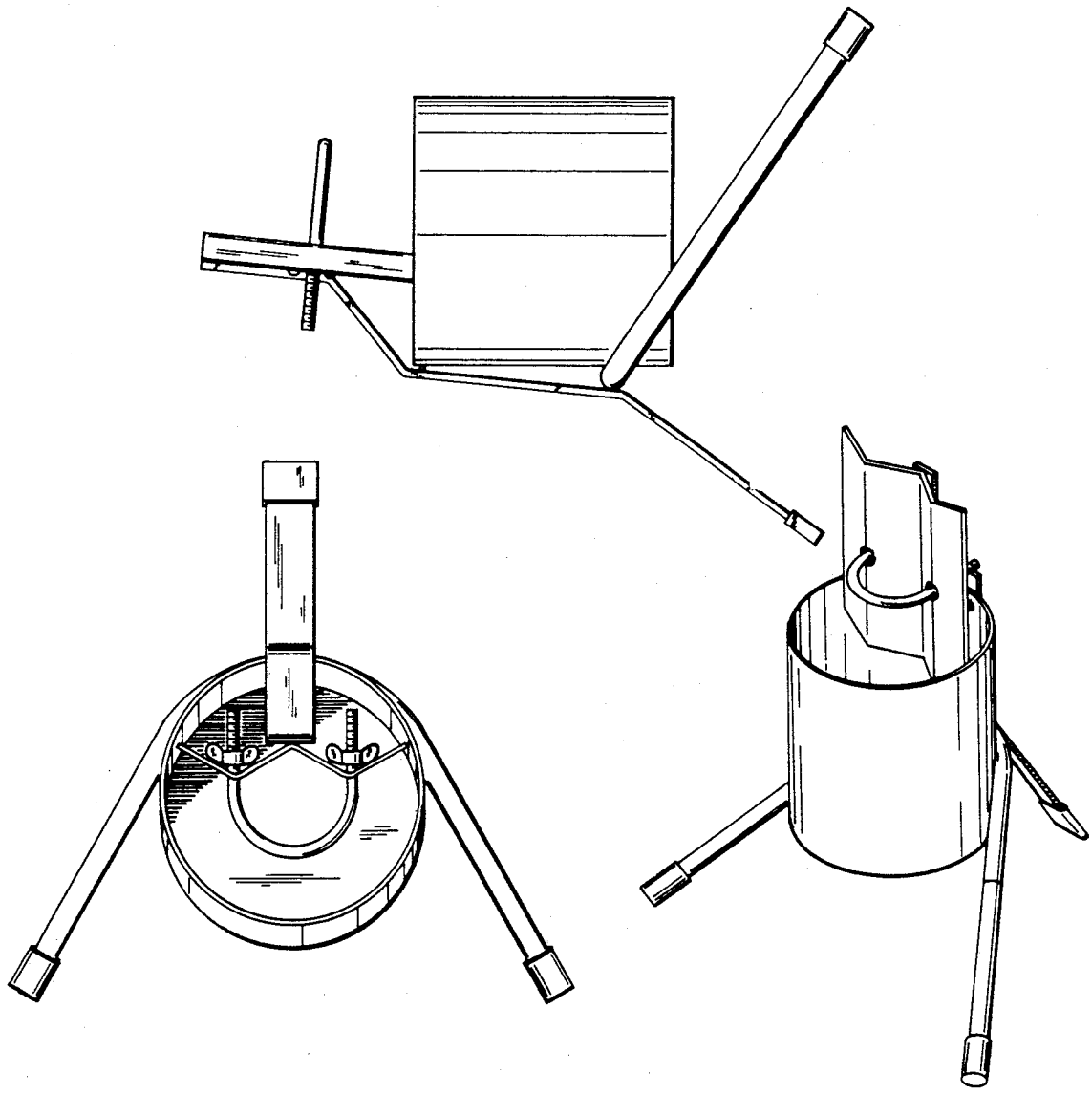

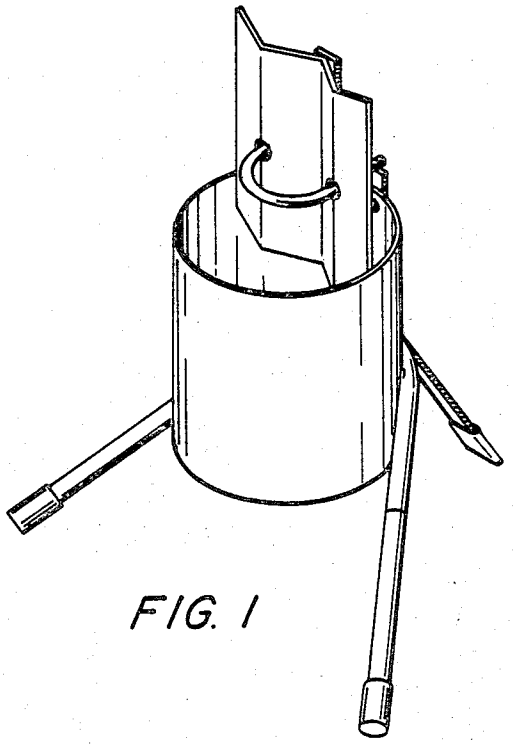

FIG. 1

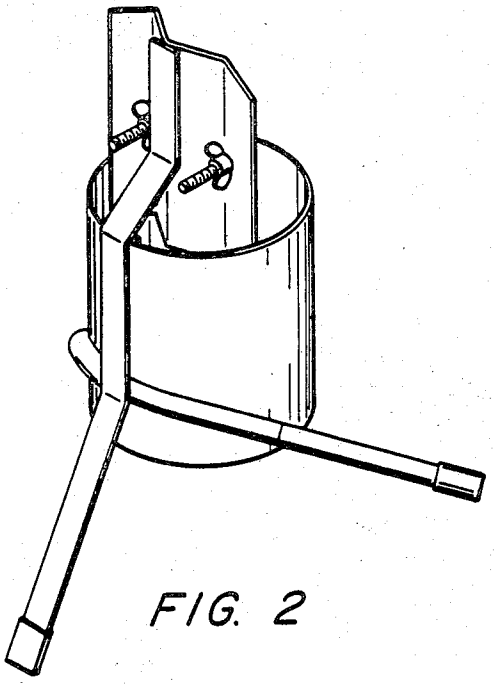

FIG. 2

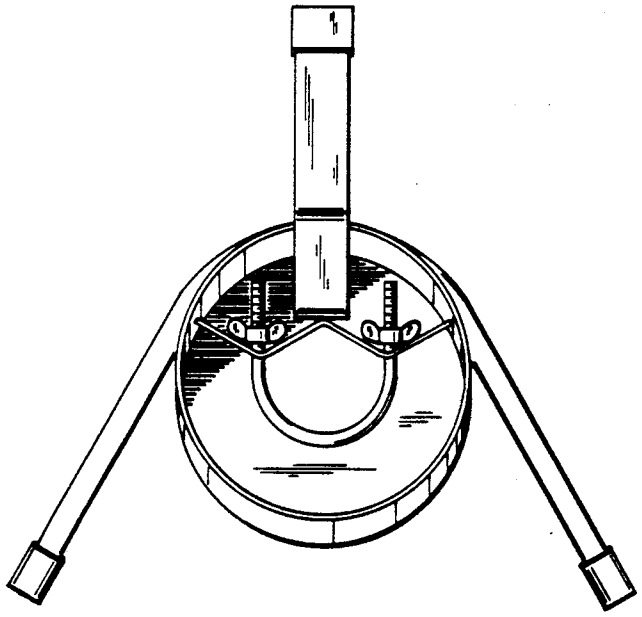

FIG. 3

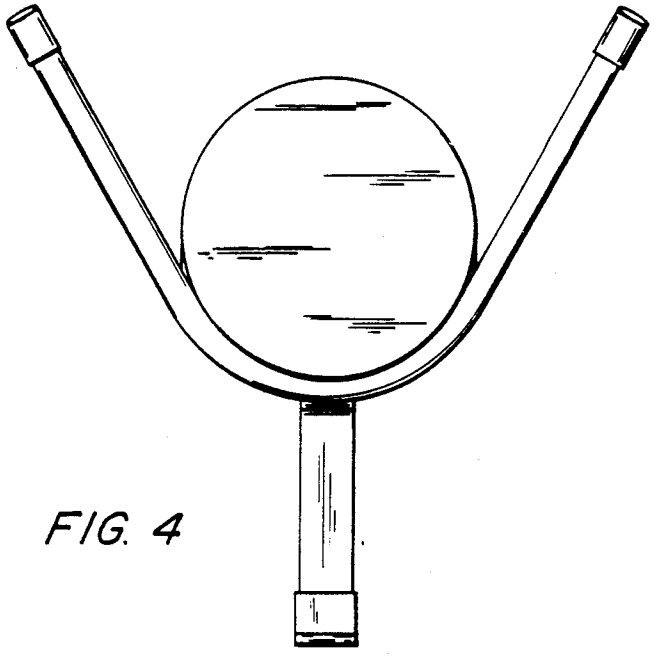

FIG. 4

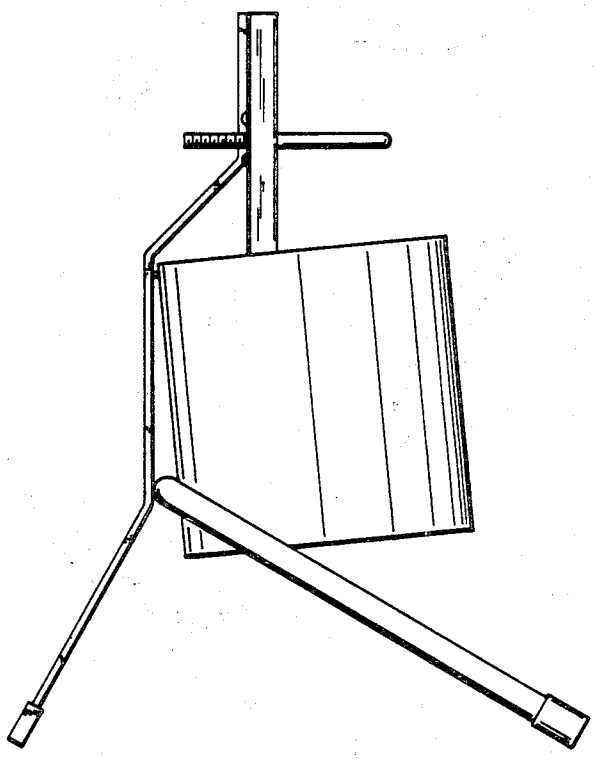

FIG. 5