May 28, 1940. E. W. MIKAELSON 2,202,563

STRIP COILING MACHINE

Filed Aug. 4, 1936 4 Sheets-Sheet 1

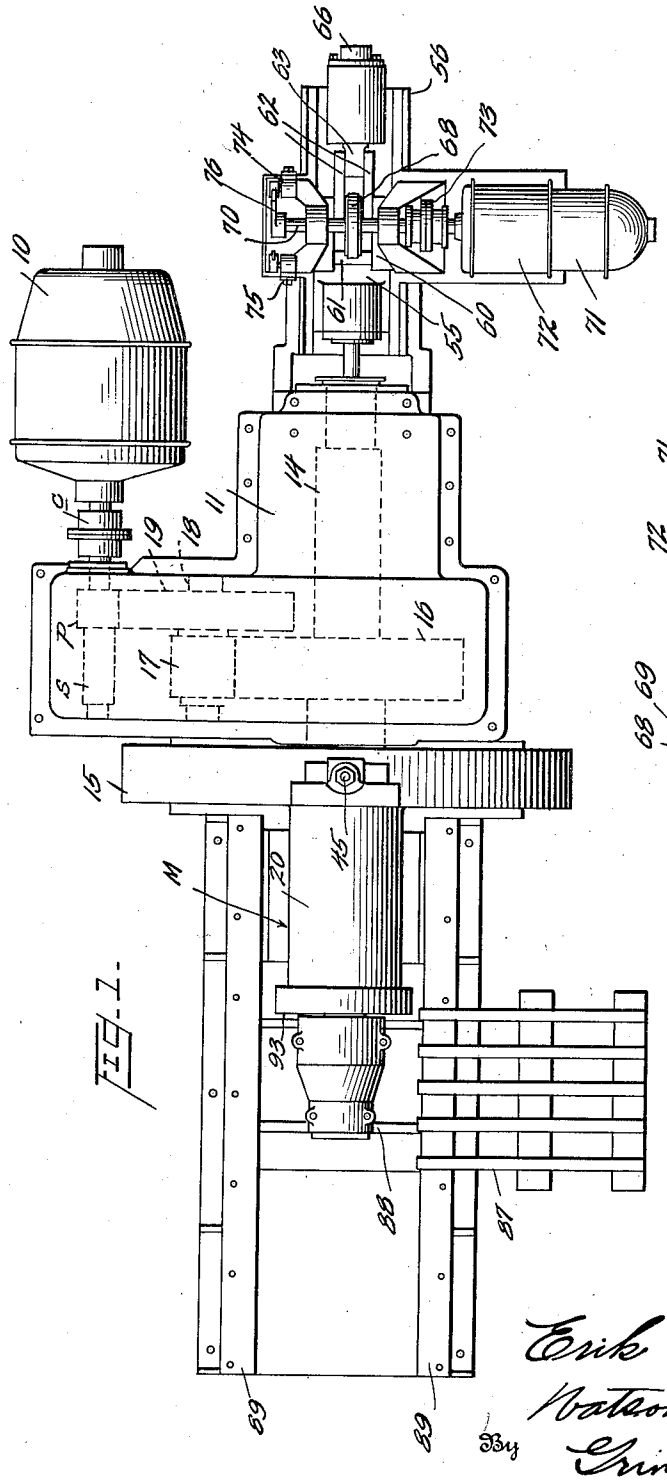

FIG. 1.

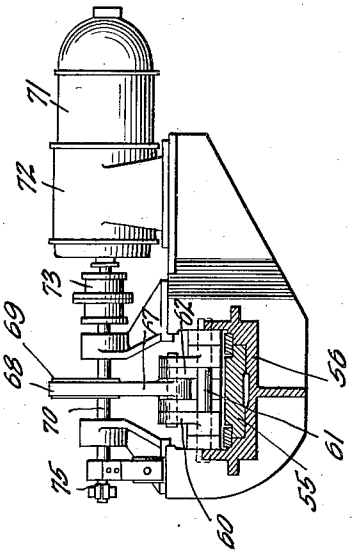

FIG. 5.

Inventor

Erik W. Mikaelson,

Watson, Cook, Moss

& Grindle

Attorney

May 28, 1940. E. W. MIKAELSON 2,202,563

STRIP COILING MACHINE

Filed Aug. 4, 1936 4 Sheets-Sheet 2

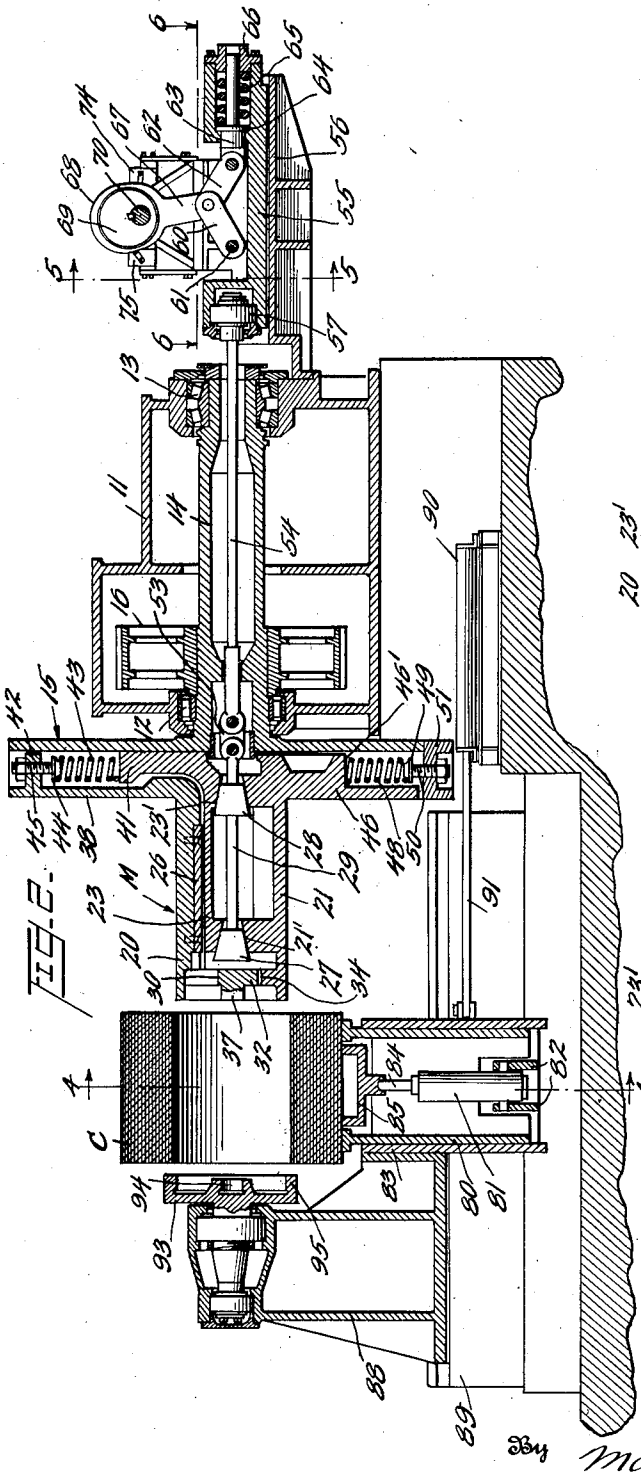

FIG. 2.

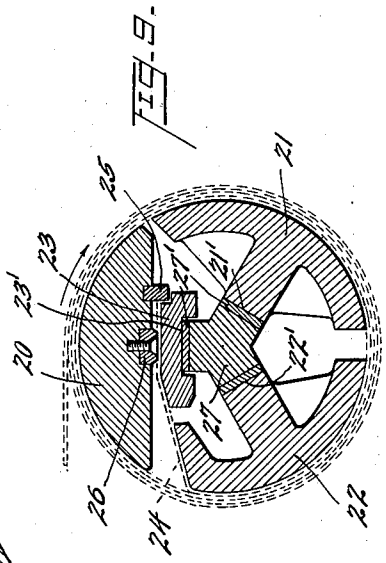

FIG. 3.

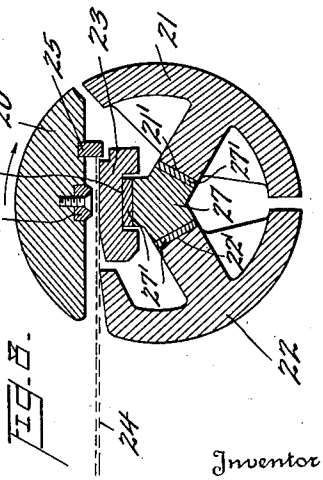

FIG. 5.

Inventor
Erik W. Mikaelson,
Watson, Coit,
Morse & Grindle
Attorneys
By

May 28, 1940. E. W. MIKAELSON 2,202,563

STRIP COILING MACHINE

Filed Aug. 4, 1936 4 Sheets-Sheet 3

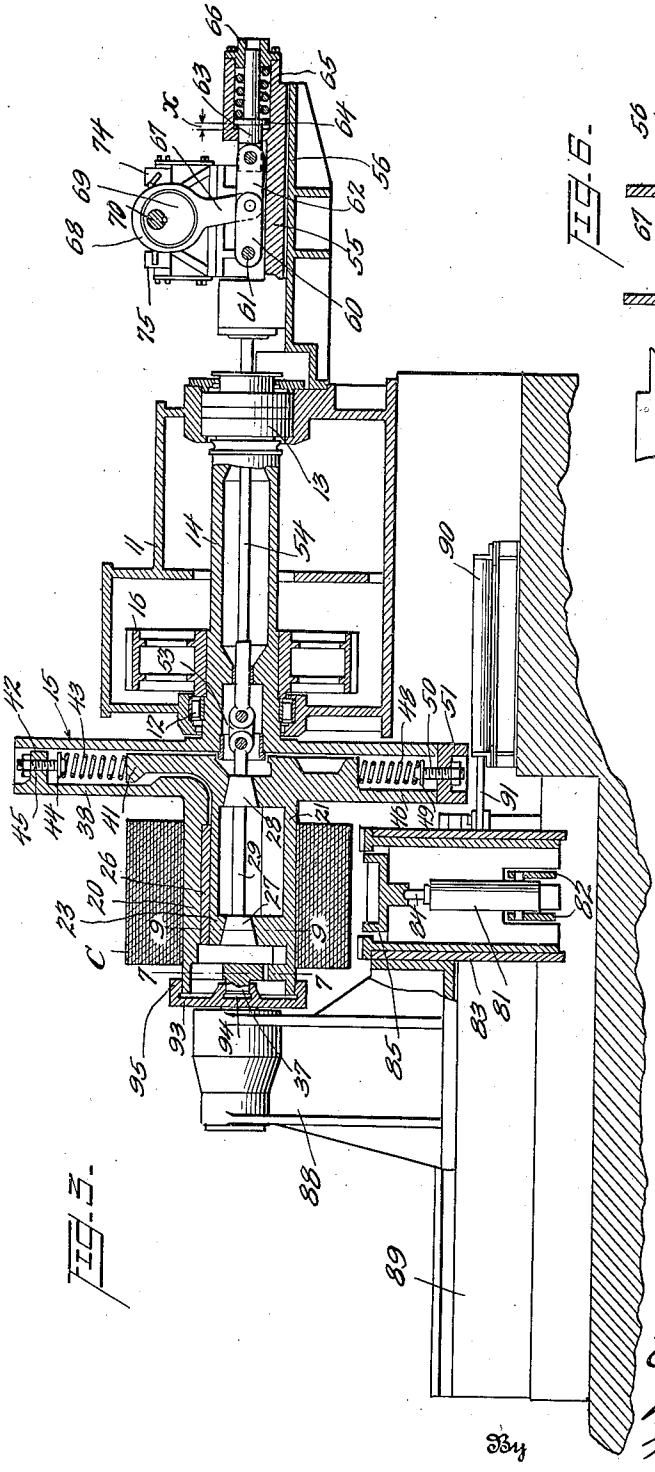

FIG. 3.

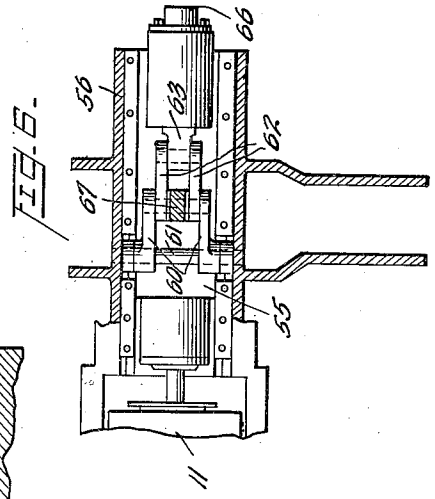

FIG. 6.

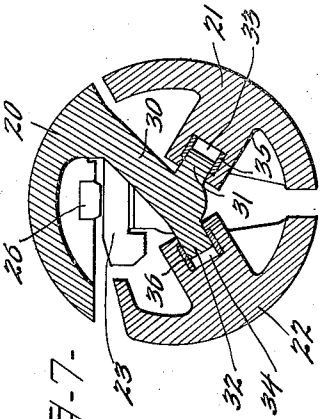

FIG. 7.

Inventor

Erik W. Mikaelson,

Watson, Coit,

Morse & Grindle

Attorneys

May 28, 1940. E. W. MIKAELSON 2,202,563

STRIP COILING MACHINE

Filed Aug. 4, 1936 4 Sheets-Sheet 4

FIG. 4.

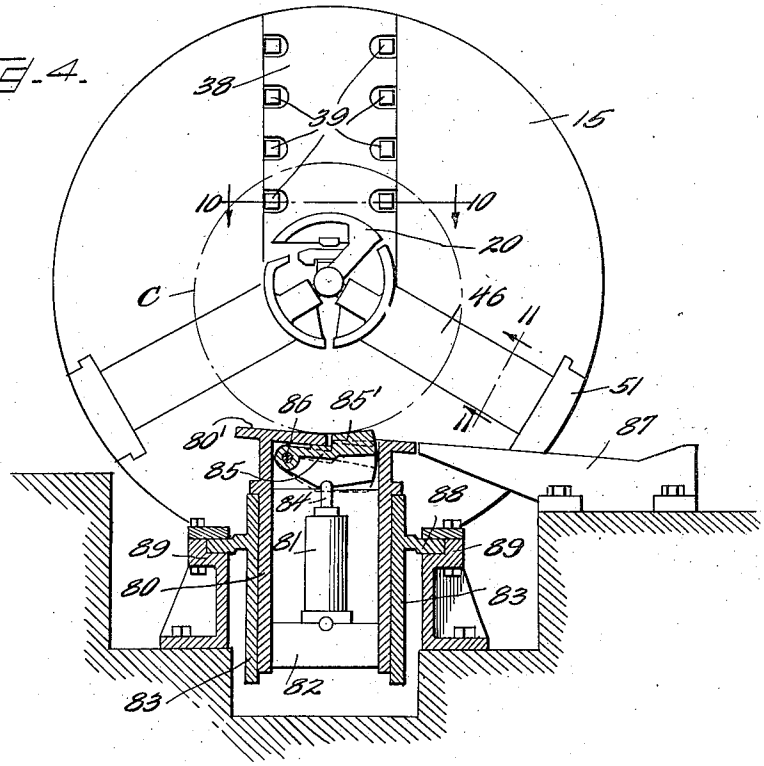

FIG. 10.

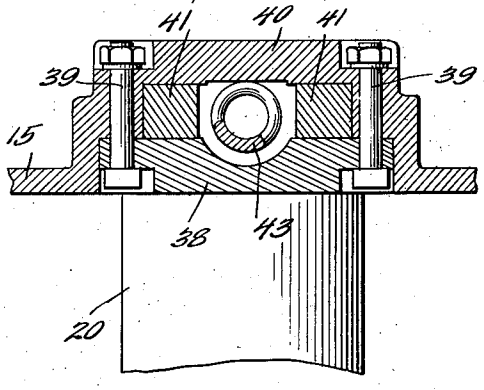

FIG. 11.

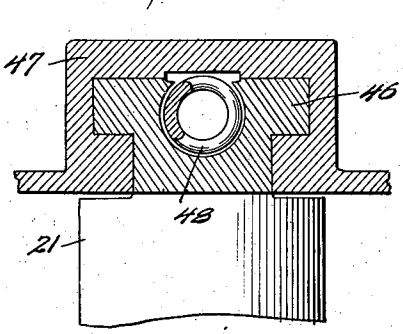

Inventor

Erik W. Mikaelson,

Watson, Coit, Moore

& Grindle

By

Attorney

Patented May 28, 1940 2,202,563

UNITED STATES PATENT OFFICE

2,202,563

STRIP COILING MACHINE

Erik W. Mikaelson, Easton, Pa.

Application August 4, 1936, Serial No. 94,239

16 Claims. (Cl. 242—78)

This invention relates to machines for coiling metallic strips.

In the production of metallic strips of great length it is customary to form them into coils in order that the metal may be conveniently handled, stored or transported. Thus, while the coil forming operation may be carried out at any time, either during the process of formation of the strip of after it has been finished, it is common practice to make use of coiling apparatus in conjunction with rolling mills, a coiling apparatus being positioned in rather close proximity to the point at which the elongated strip emerges from a rolling mill, and functioning to form the strip into a coil as rapidly as it issues from the mill. In many instances it is deemed desirable to so operate the coiling mechanism that it places under tension that portion of the length of the strip which extends between the mill and the coiling machine.

In accordance with the present invention a strip coiling machine or apparatus of general utility is provided, which may be made use of in the coiling of elongated metallic strips generally, forming such strips rapidly and easily into tightly wound coils. The invention is, however, particularly useful when employed in conjunction with a rolling mill since it is well adapted to be so operated that the length of the strip intermediate the mill and coiling machine is maintained under the desired tension. It is also so designed and constructed that it may with facility form coils of strip material which is heated after passage through a rolling mill, either because passed into the mill while hot or, in the case of cold strip, because of the heating action of the rolls. It will be appreciated that a metal strip which, while at a temperature higher than atmospheric, is formed into a coil, will gradually cool and, as it cools, will diametrically contract.

The strip coiling apparatus which forms the subject matter of the present invention is provided with a winding mandrel of novel design and construction, one feature of this mandrel comprising means for permitting its gradual contraction whenever it is employed in the formation of coils from heated strips, thus preventing injury to the coil, injury to the mandrel, and excessive binding of the coil upon the mandrel. The mandrel is so constructed that it will contract only gradually under the pressure exerted by the coil and to the extent necessary to prevent the development of an excessive pressure upon the mandrel by the coil, due to the shrinkage of the coil, at the same time maintaining the coil firmly supported, contraction of the coil being opposed by substantially uniform forces of substantial magnitude so that the several mandrel parts are maintained tightly engaged at all times during the winding operation with the inner convolution of the coil.

The winding mandrel is also so designed and constructed that, at the completion of a coiling operation, and regardless of whether or not the mandrel has been forced to contract during such operation, it may be quickly and easily further collapsed in order that the coil may be readily removed from the mandrel. This further collapsing or contracting operation is under the control of an operator and may be carried out at any convenient time.

The invention embodies a number of novel and important details of construction which will hereinafter be described in detail and in the preferred embodiment is adapted to receive and coil elongated strips which vary considerably in thickness, without requiring adjustment. By its use, strip coiling operations may be carried out more conveniently, rapidly and safely than such operations can be performed upon generally similar machines heretofore designed or suggested.

One embodiment of the invention which has been selected for disclosure by way of example is illustrated in the accompanying drawings, in which.

Figure 1 is a top plan view of a strip coiling machine embodying the invention;

Figure 2 is a section through the machine shown in Figure 1 taken vertically and along the axis of the rotatable mandrel, the lower portion of the mandrel supporting head, however, being shown in other than vertical axial section for the purpose of clarifying the illustration;

Figure 3 is a similar section but showing the operating parts of the apparatus in positions different from those in which these parts are illustrated in Figure 2;

Figure 4 is a section on line 4—4 of Figure 2;

Figure 5 is a section on line 5—5 of Figure 2;

Figure 6 is a section on line 6—6 of Figure 2;

Figure 7 is a section on line 7—7 of Figure 3;

Figures 8 and 9 are cross-sections through the mandrel, taken on line 9—9 of Figure 3, but showing the several mandrel parts in different positions in the two figures; and

Figures 10 and 11 are sections on the lines 10—10 and 11—11, respectively of Figure 4.

The various operating parts of the coiling apparatus, with the exception of the driving motor 10, are supported upon a suitable frame or support, the details of which are relatively unimportant and which need not be specifically described. Mounted in supporting frame 11 are aligned roller bearings 12 and 13, respectively, the last mentioned bearing being a radial and thrust bearing, and rotatably supported in these bearings is the hollow spindle 14, this spindle being substantially horizontally disposed. At one end spindle 14 carries the disc-like mandrel support-

ing head 15 and intermediate the bearings 12 and 13 there is mounted upon spindle 14 the gear 16, this gear being keyed to spindle 14 and having its teeth in mesh with those of a pinion 17 (diagrammatically illustrated in Figure 1) fixed upon shaft 18.

A gear 19 also fixed upon shaft 18 has its teeth in mesh with the teeth of a pinion P fixed on shaft S which is disposed in axial alignment with the shaft of driving motor 10 and is connected thereto through the flexible coupling C. Spindle 14 will be revolved when the motor 10 is energized, as will be apparent, and its speed of revolution may be easily controlled by controlling the speed of the driving motor. Affixed to the outer face of the spindle head 15 is the collapsible mandrel, generally indicated at M, upon which the coils are formed in the operation of the machine. This mandrel may be formed in various ways but comprises at least two relatively movable coil engaging and supporting parts in order that it may contract or collapse for the purposes hereinbefore specified.

In the form of the invention selected for illustration the mandrel comprises three such parts which, in cross section, are segmental, as shown in Figures 8 and 9. The part 20, illustrated in these figures is rigidly attached to the head 15 and its cylindrical outer surface is at all times centered upon the axis of rotation of spindle 14. The parts 21 and 22, the outer surfaces of which are also cylindrical so as to comprise, together with the cylindrical surface of part 20, a generally cylindrical mandrel, are radially movable through limited distances and it is by the inward movement of parts 21 and 22 toward the axis of rotation of the mandrel that its contraction is brought about.

Just inside of the stationary part 20, and extending parallel thereto, is the gripping tongue 23 adapted to cooperate with the part 20 in gripping the leading edge of a strip, such as illustrated in chain lines at 24 in Figure 8. With the several parts of the mandrel, and the gripping tongue positioned as shown in Figure 8, the leading edge of the strip section 24 may be freely introduced between the adjacent longitudinal edges of parts 20 and 22 and into the space between part 20 and the gripping tongue 23, an abutment member 25 rigidly secured to part 20 halting the inward movement of the end of the blank when this end is in position to be gripped between the mutually facing surfaces of part 20 and the gripping tongue 23. A hardened steel bar or narrow plate 26 secured to the inner surface of part 20 is provided to reduce the area of contact between the end of strip 24 and the outer clamping member and to enable the part and member to more firmly grip therebetween the end of the blank.

Each of parts 21 and 22 is provided with longitudinally spaced, inclined wedge engaging surfaces 21' and 22' and likewise the gripping member 23 is provided with similarly inclined wedge engaging surfaces, indicated at 23'. Operating wedges, each having surfaces to engage the surfaces 21', 22' and 23' are indicated at 27 and 28, respectively, these wedges being rigidly secured to the rod 29 disposed axially of the mandrel. With this construction it is apparent that movement of the wedging means comprising wedges 27 and 28 and rod 29 toward the right (Figure 2) will cause mandrel parts 21 and 22 to be thrust simultaneously radially outward and the gripping tongue 23 to be, at the same time, moved toward the fixed part 20. Conversely movement of the wedging means toward the left (Figure 2) will permit radially inward movement of parts 21 and 22 and also of gripping tongue 23, the mandrel being thereby contracted. In Figure 8 the mandrel is shown in this contracted condition and in Figure 9 in its expanded condition with a coil partially formed.

The amount of expansion and contraction is relatively small as it is only necessary that it be relatively slight. It may be said here that the angles which the contacting faces of the wedges 27 and 28 and the parts 21, 22 and tongue 23 make with the axis of the mandrel are such, and the wedges are so constructed, that the wedges are automatically thrust to the left to permit contraction of a coil when the pressure exerted by the coil upon the mandrel becomes excessive, or exceeds a predetermined minimum. By preference also the wedges are faced with anti-friction material such as indicated at 27' in Figure 8, the coefficient of friction of which is known with substantial exactness. In order that the parts 21 and 22 may be interconnected at their outer ends to prevent circumferential shifting or displacement thereof relatively to the fixed part 20, means is provided for interlocking these parts to each other and to the fixed part 20 in such manner that the outer ends of the several parts are prevented from angular displacement, while at the same time the radial movements of parts 21 and 22 are not interfered with.

As shown in Figure 7, the fixed part 20 of the mandrel has at its outer end a downwardly and inwardly inclined extension 30 which crosses the axis of the mandrel and which is provided at its lower end with the radially extending portions 31 and 32. The movable parts 21 and 22 are provided, toward their outer ends, with radial sockets 33 and 34 provided respectively with liners 35 and 36 the inner surfaces of which closely but slidably engage the radially extending portions 31 and 32 of extension 30 of part 20. Hence, in the radial movements of parts 21 and 22, the projections 31 and 32 will constitute guides, preventing angular displacement of the mandrel parts relatively to each other while permitting free expansion and contraction of the mandrel.

Extension 30 of fixed mandrel part 20 is likewise provided with a relatively short axially projecting cylindrical member 37 the function of which will be later explained. At the end thereof, adjacent head 15, the part 20 is provided with an extension 38 projecting outwardly radially of the head and this extension 38 is rigidly secured to head 15 by means of bolts 39. From an inspection of Figure 10, it will be perceived that head 15 is provided with an integral box-like portion 40, extending radially and in rear of the face, the bolts 39 extending through apertures formed in the lateral walls of this box-like portion and the radial extension 38 of part 20 of the mandrel comprising a closure for the elongated radially extending recess within part 40.

Slidably fitting against the mutually facing walls of extension 38 and part 40 is a radial extension 41 of gripping tongue 23. Intermediate the upper end of radial extension 41 of the gripping tongue and a lug 42 integral with the radial extension 38 of part 20 is disposed a helical spring 43, this spring normally urging the gripping tongue to strip end disengaging position, the degree of compression in the spring being regulatable by adjusting the position of the upper spring abutment 44 by means of the adjusting screw 45. Each of the movable mandrel parts 21 and 22 is

likewise provided with a radial extension and in Figure 2 the extension of part 21 is indicated at 46. This extension 46 which in cross-section is T-shaped as shown in Figure 11, is guided in a slideway formed in the elongated radially disposed portion 47 of head 15, being closely retained therein but freely slidable radially of the head. A radially disposed helical compression spring 48, also disposed within this recess, has its inner end resting against a shoulder 46' and its outer end against the adjustable spring abutment 49 supported upon the end of the adjusting screw 50. Adjusting screw 50 is in turn mounted in a threaded recess formed in the cap 51 which forms a closure for the outer end of the radial recess in which the slide 46 may have limited movement. The movable part 22 of the mandrel is provided with a similar radial extension which is also normally spring pressed inwardly and hence it is seen that mandrel parts 21 and 22 and the gripping tongue 23 are at all times resiliently urged inwardly toward the axis of the mandrel and hence the wedge engaging faces thereof are at all times maintained in close contact with the corresponding faces of the wedges 27 and 28.

The wedging means comprising wedges 27, 28 and rod 29 is connected by means of a link 53 to an actuating rod 54 disposed axially of the mandrel and within the hollow spindle 14. Rod 54 projects beyond the opposite end of the spindle and has its end connected to a slide 55, mounted upon a bracket 56, through a thrust bearing 57 which bearing permits free rotation of the actuating rod relatively to the slide while at the same time transmitting axial thrust from the rod to the slide and vice versa. A slide operating toggle is shown in Figures 1, 2, 3, 5 and 6 this toggle comprising the link 60 pivotally mounted on the transversely extending pivot member 61 the ends of which are rigidly supported by the bracket 56, and the link 62 one end of which is pivotally connected to link 60 and the other end of which is connected to a plunger 63 which is in turn mounted for longitudinal sliding movement in suitable bearings formed in the outer end of the slide. Plunger 63 is provided with an annular shoulder 64 and the portion of the plunger extending outwardly of shoulder 64 is cylindrical and encircled by a helical compression spring 65, one end of this spring bearing against shoulder 64 and the opposite end against the cap 66 rigidly connected to slide 55. From the foregoing description it will be readily perceived that slide 55 is so connected to the wedging means within the mandrel that if the slide is moved to the right (Figure 2) the mandrel will be expanded and if moved to the left the mandrel will be allowed to contract, while at all times the spindle and mandrel may rotate without breaking the operative connection between the wedging means and slide 55. The toggle operating means comprises a link 67 having at its upper end an eccentric strap 68 encircling an eccentric 69 fixed upon the eccentric shaft 70, together with means for rotating the eccentric shaft when it is desired to operate the toggle.

This last mentioned means includes motor 71 connected to the eccentric shaft 70 through suitable reduction gearing contained within the housing 72, and the flexible coupling 73. Electrical limit switches are indicated at 74 and 75 which switches are adapted to be actuated by an arm 76 fixed upon the eccentric shaft. When the motor is energized the eccentric 69 will be rotated in one direction or another depending upon the direction of rotation of the motor and will continue to operate until the eccentric has been moved through the desired angle whereupon the arm 70 will contact with one or the other of the limit switches to break the motor circuit and halt the movement of the eccentric. In this manner the toggle may be actuated from the position in which it is illustrated in Figure 2 to the position in which it is illustrated in Figure 3, in such movement the slide 55 being moved to the right and the wedging means caused to expand the mandrel. When the motor and eccentric are operated in the reverse direction the toggle is broken and the slide 55, and wedging means, moved to the left, to permit the mandrel to contact. When the slide 55 is moved to the left in this manner it is positively actuated, the shoulder 64 upon the plunger 63 engaging the end of the recess formed in the slide within which the shoulder is located, as shown in Figure 2 When, however, the toggle is manipulated to thrust the slide 55 to the right, movement of the plunger 63 is not positively transmitted to the slide 55 but on the other hand is transmitted to the slide only through the coiled compression spring 65.

Spring 65 is a relatively heavy spring and sufficient force will be transmitted to the wedging means to cause the same to expand the mandrel and manipulate the gripping tongue 23, overcoming the action of the springs such as 43 and 48 which opposes the outward movement of the movable parts 21, 22 and gripping tongue 23. It will be perceived, however, from an inspection of Figure 3, that spring 65 is partially compressed during this movement of the slide 55 to the right and that the shoulder 64 is spaced somewhat from the inner end of the recess in the slide in which it is located, this spacing being equal to the distance X indicated in Figure 3 Hence the wedging means may be said to be resiliently held in mandrel expanding position and, should at any time during a winding operation, a coil such as indicated at C, owing to contraction due to cooling, exert a sufficient pressure upon the mandrel, the wedging means will be in fact forced to recede, resulting in further compression of spring 65. By selecting a spring having the desired characteristics when considered with the characteristics of the wedging means the yielding point of the mandrel under coil pressure may be predetermined with a fair degree of accuracy and the parts are designed to permit this yielding to occur prior to the development of any dangerous pressure of the coil upon the mandrel. Nevertheless it is readily perceived that by reason of the interposition of the spring 65 in the mechanism which controls the wedging means, the several mandrel parts at all times bear closely against the inner cylindrical surface of the coil C and regardless of whether or not mandrel contraction actually takes place.

Full mandrel contraction is of course desired after the completion of a winding operation in order that the completed coil may be easily removed. This full mandrel contraction is effected by breaking the toggle, as illustrated in Figure 2, after which any coil on the mandrel may be easily removed axially of the mandrel.

Means for effecting removal of a completed coil C from the mandrel includes a cylindrical coil engaging and supporting member 80 which is vertically movable, a hydraulic jack or similar device 81 being provided for effecting this vertical movement. The lower end of this jack 81 is pivotally mounted upon cross members 82 of the

cylindrical frame 83 within which member 80 is housed and guided. The extension 84 of the piston of the jack 81 bears against a lever 85 pivoted to member 80 at 86. Lever 85 extends through an aperture in the inclined top of member 80, the inclined upper surface 80' of member 80 being disposed substantially in the plane of the upper surface of the coil receiving rack 87. The upper surface of the projection 85' of lever 85 is, when this lever is raised as shown in Figure 4, inclined reversely to the upper surface of member 80 and these two relatively inclined surfaces together constitute coil engaging and retaining surfaces so long as the lever 85 is in the raised position. When the pressure in jack 81 is relieved, lever 85 will fall to its dotted line position (Figure 4) and the coil will roll laterally onto the receiving rack 87 from whence it may be removed by any suitable means. The housing 83 for the vertical plunger member 80 is rigidly secured to a frame 88 which frame is in turn slidably mounted upon rails, which are indicated at 89, in such manner that the entire frame may be moved axially of the mandrel, a hydraulic jack or the like for effecting such movement being indicated at 90 the movable element of which is connected to housing 83 by means of link 91.

When a coil is in process of formation, the housing 83 and frame 88 occupy the positions in which they are shown in Figure 3, the vertically movable member 80 being lowered so as not to interfere with the formation of the coil. After the coil is completely formed and rotation of the mandrel has been stopped, jack 81 is energized and the lower surface of the coil is caused to be engaged by the upper surface of the vertically movable member 80 and the upper surface of member 85. These parts are then locked in such position by blocking the fluid line leading to the jack or hydraulic cylinder. The eccentric 69 is then operated to effect movement of the wedging means so that the mandrel will collapse or radially contract under the influence of springs 43, etc. The frame 88 is then moved to the left as shown in Figure 2 so that the coil C entirely clears the mandrel M. Thereafter fluid is allowed to escape from jack 81, the lever 85 falls, and the coil rolls onto the receiving rack.

The means just described forms no portion of the present invention and any similar means for supporting a finished coil in order to enable the operator to effect its axial removal from the mandrel may be substituted therefor.

Mounted upon the upper end of the pedestal like frame 88, and so as to be freely revoluble about an axis coincident with the mandrel axis, is a supporting head 93. This supporting head is provided with an axial recess 94 for the reception of the cylindrical projection 37, previously described, which projects axially of the mandrel and is rigid with the fixed part 20 thereof. Head 93 is likewise provided with a second flange 95 which is adapted to closely encircle the generally cylindrical outer end of mandrel M while the coil is being formed. The head 93 is shown in mandrel supporting position in Figure 3 and it will be observed that the head is so formed as not to interfere with the contraction of the mandrel whenever such contraction occurs while at the same time, through the interengagement of projection 37 with recess 94 the mandrel is rotatably supported during the formation of the coil and thereafter or until the weight of the coil is transferred to the supporting member 80. Coils of great weight may therefore be built up upon the mandrel without straining or cramping the bearings 12 and 13 which support the spindle 14.

The design and arrangement of the various elements of the invention may be considerably modified in adapting the same to the coiling of materials having different characteristics, as will be apparent. The mandrel may be formed in two, three or more relatively movable portions and likewise the wedging means and the mechanism for actuating the same may be changed in detail. In every case, however, the cooperation between the wedging means and the blank gripping means should be such as to readily permit, and without the necessity of adjustment, the reception and gripping of strips of varying thicknesses since all coiling machines are called upon to handle and coil strips which do vary in thickness. In the present case variations in blank thickness will simply cause slight variations in the distance X indicated in Figure 3.

Having thus described the invention, what is claimed as new and desired to be secured by Letters Patent is:

1. In a strip coiling machine, in combination, a mandrel revoluble about an axis and having a plurality of relatively movable coil engaging parts, wedging means for acting on said parts to expand the mandrel, and mechanism including a yieldable element for normally maintaining said wedging means in position to hold the mandrel in expanded condition, said element permitting the wedging means to yield and the mandrel to contract when a coil encircling the mandrel contracts upon cooling.

2. In a strip coiling machine, a winding mandrel having a plurality of independent coil engaging parts and mechanism holding said parts in coil engaging relationship at all times during a coiling operation, said mechanism permitting relative movement of a plurality of said parts and contraction of the mandrel under the pressure of a contracting coil and including wedging means engaging the mandrel parts, said wedging means being adapted to be actuated by said parts under the influence of forces applied thereto by a contracting coil, and means yieldingly opposing movement of said wedging means under such pressure.

3. In a strip coiling machine, a winding mandrel having a plurality of independent coil engaging parts and mechanism holding said parts in coil engaging relationship at all times during a coiling operation, said mechanism permitting relative movement of a plurality of said parts and contraction of the mandrel under the pressure of a contracting coil and including a wedge engaging the mandrel parts and movable longitudinally of the mandrel, said wedge being adapted to be actuated by said parts under the influence of forces applied thereto by a contracting coil, and means yieldingly opposing movement of said wedge under such pressure.

4. In a strip coiling machine, a winding mandrel having a plurality of independent coil engaging parts and mechanism holding said parts in coil engaging relationship at all times during a coiling operation, said mechanism permitting relative movement of a plurality of said parts and contraction of the mandrel under the pressure of a contracting coil and including a plurality of spaced wedges each engaging the mandrel parts and each movable longitudinally of

the mandrel, each wedge being adapted to be actuated by said parts under the influence of forces applied thereto by a contracting coil, and means yieldingly opposing movement of said wedges under such pressure.

5. In a strip coiling machine, a winding mandrel having a plurality of independent coil engaging parts and mechanism holding said parts in coil engaging relationship at all times during a coiling operation, said mechanism permitting relative movement of a plurality of said parts and contraction of the mandrel under the pressure of a contracting coil and including wedging means engaging the mandrel parts, said wedging means being adapted to be actuated by said parts under the influence of forces applied thereto by a contracting coil, an operating rod to which said means is connected, and means yielding opposing movement of said rod in one direction.

6. The combination set forth in claim 5 in which said means comprises a spring positioned outside of the mandrel and connected to said rod by means permitting free rotation of the rod relatively to the spring.

7. In a strip coiling machine, a collapsible winding mandrel and mechanism for controlling the expansion and contraction thereof, said mechanism including an operating rod extending axially of the mandrel and rotatable therewith, said mechanism including means for positively thrusting said rod in one direction and for thrusting the rod in the opposite direction through a resilient element which remains active after said first means has moved the rod through a predetermined distance.

8. In a strip coiling machine, a collapsible winding mandrel and mechanism for controlling the expansion and contraction thereof, said mechanism including an operating rod extending axially of the mandrel and rotatable therewith, said mechanism including a toggle one end of which is connected to a stationary frame and the other is connected to the rod through a resilient member.

9. In a strip coiling machine, a collapsible winding mandrel and mechanism for controlling the expansion and contraction thereof, said mechanism including an operating rod extending axially of the mandrel and rotatable therewith, said mechanism including a toggle, a stationary frame to one end of which the toggle is pivoted, and a connection between the other end of the toggle and the said rod, which connection includes a resilient member.

10. In a strip coiling machine, a collapsible winding mandrel and mechanism for controlling the expansion and contraction thereof, said mechanism including an operating rod extending axially of the mandrel and rotatable therewith, said mechanism including a toggle, means for operating the toggle, devices for limiting the movements of said toggle operating means, a stationary frame to which one end of the toggle is pivoted, and a connection between the other end of the toggle and said rod, which connection includes a resilient member.

11. In a strip coiling machine, a generally cylindrical mandrel mounted for revolution about its longitudinal axis, said mandrel comprising a plurality of relatively movable coil supporting parts and mechanism including an element movable longitudinally of the mandrel and a yieldable member, for moving said parts relatively to each other to increase or decrease the diameter of the mandrel, the yieldable member of said mechanism permitting said element to move under inward pressure of said parts to permit said parts to move, and the mandrel to automatically contract, when a coil supported thereon contracts upon cooling.

12. In a sheet metal strip coiling machine, a generally cylindrical mandrel mounted for revolution about its longitudinal axis, said mandrel comprising a plurality of relatively movable coil supporting parts and being contractible whether at will or automatically under pressure of the supported coil by relative movement of said parts, and mechanism for moving said mandrel parts relatively to each other at will, in order to expand or contract the mandrel, at least one portion of said mechanism being adapted to yield under the contractive force exerted through the mandrel by the strip coil supported thereon upon cooling, and thus permit the mandrel parts to move and the mandrel to automatically contract.

13. In a sheet metal strip coiling machine, a generally cylindrical mandrel mounted for revolution about its longitudinal axis, said mandrel comprising a plurality of relatively movable coil supporting parts, mechanism comprising a train of operatively connected elements for moving said parts relatively to each other to increase or decrease the diameter of the mandrel at will, said mechanism including as one of said elements a coil spring which permits said mechanism to yield, said mandrel parts to move, and the mandrel to automatically contract, when a coil supported thereon contracts upon cooling.

14. The combination set forth in claim 12, in which the mechanism comprises a resilient element which permits continuous yielding of said mechanism and contraction of said mandrel down to the smallest diameter of said mandrel.

15. In a strip coiling machine, a mandrel supported at one end for rotation about a horizontal axis, said mandrel having a part stationary with respect to its axis of revolution and parts radially movable relatively to said axis, means for radially adjusting said last mentioned parts, and a rotatable bearing member movable axially of the mandrel for engaging and rotatably supporting said stationary part, said bearing member also including an inwardly facing annular part adapted to enclose the ends of the radially movable mandrel parts when the mandrel is expanded.

16. In a strip coiling machine, a mandrel supported at one end for rotation about a horizontal axis, said mandrel having a part stationary with respect to its axis of revolution and parts radially movable relatively to said axis, means for radially adjusting said last mentioned parts, said parts being arranged in annular complementary relation, said stationary part being provided at its outer end with a projection comprising an axial trunnion element and two radially disposed guide elements, radial recesses formed in the other parts and adapted to receive said guide elements, and a rotatable bearing member movable axially of the mandrel for engaging and rotatably supporting said trunnion element, an inwardly projecting annular portion formed on said bearing member and adapted to enclose the ends of the radially movable mandrel parts when the mandrel is expanded.

ERIK W. MIKAELSON.