Aug. 27, 1929. E. E. LEACH 1,725,988

FLOOR FURNACE

Filed Nov. 25, 1927

FIG. 1.

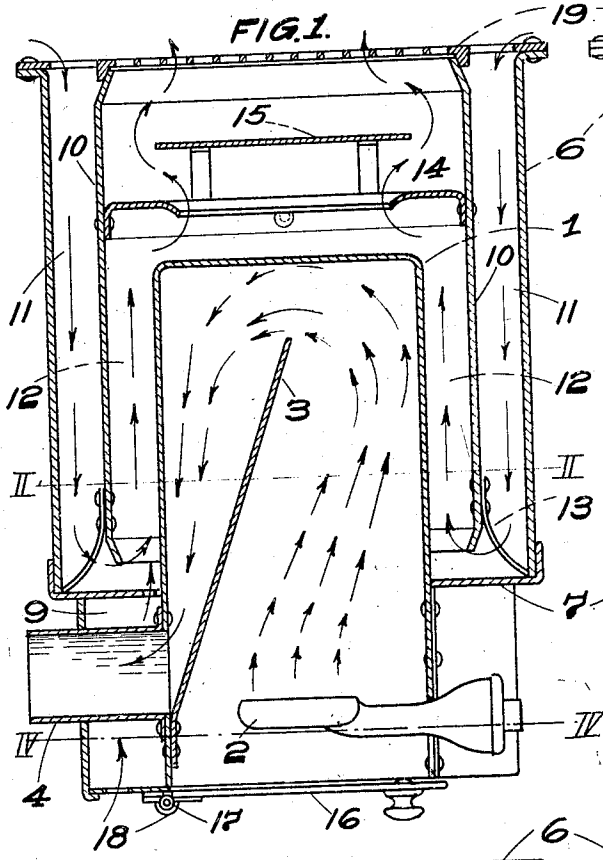

FIG. 3.

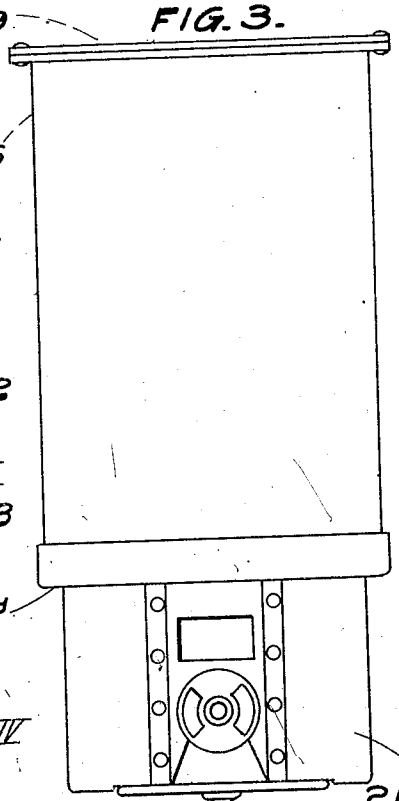

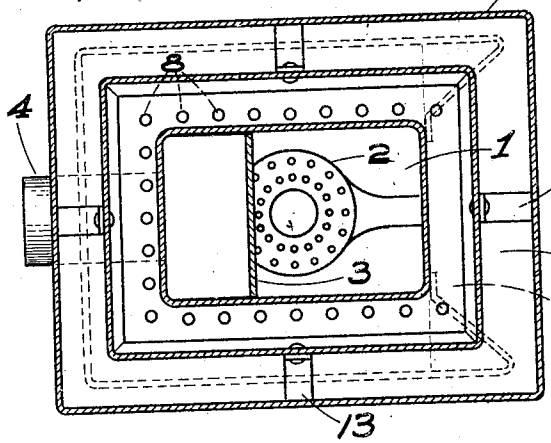

FIG. 2

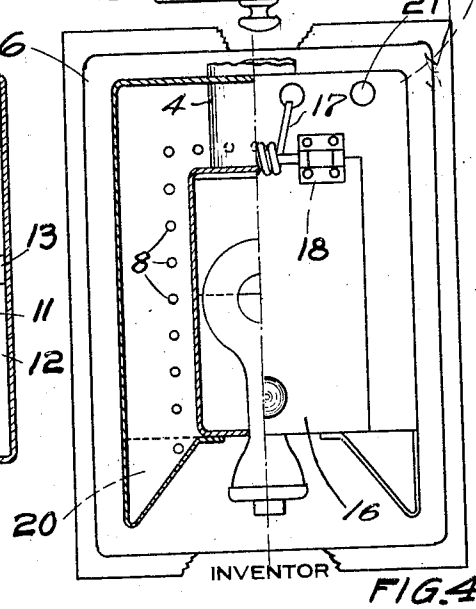

FIG. 4.

INVENTOR

EDWARD E. LEACH

BY

Edward R. Inman

ATTORNEY

Patented Aug. 27, 1929. 1,725,988

UNITED STATES PATENT OFFICE.

EDWARD E. LEACH, OF FRANKLIN, PENNSYLVANIA.

FLOOR FURNACE.

Application filed November 25, 1927. Serial No. 235,523.

The object of this invention is to provide a floor furnace, also known as pipeless furnace, of comparatively small size for use in heating individual rooms or other comparatively small areas, and from which the heated air passes directly upward into the area to be heated, instead of being conducted thereto through pipes which offer a considerable degree of resistance to the passage of the heated air.

My improved furnace is clearly illustrated in the accompanying drawings in which:

Fig. 1 is a central, vertical section,

Fig. 2 is a transverse section on line II—II of Fig. 1,

Fig. 3 is an elevation of the adjacent side of Fig. 1, i. e. a front view.

Fig. 4 is an inverted plan view, partly in transverse section on line IV—IV of Fig. 1.

The construction illustrated in said drawings is substantially as follows:

The combustion chamber and dome is indicated by the reference numeral 1, in the lower portion of which chamber is located a suitable heat generating means such as a gas burner 2; a baffle plate 3 is attached to the lower edge of one wall of said chamber and extends diagonally upward therefrom with its upper edge in proximity to the top plate of or wall of said dome. Upon the opposite side of said plate from the burner 2 and near the bottom of said chamber is located a flue 4 for the escape of the products of combustion, as indicated by the arrows within the combustion chamber of Fig. 1.

Surrounding said combustion chamber is a lower jacket 5 and an upper jacket 6. Said jackets 5 and 6 and their respective enclosures are separated from each other by the transverse diaphragm or partition 7, but communication is provided therebetween through the perforations 8 to permit the heated air in the lower chamber 9 to pass into the warm air current of the upper chamber.

Within the upper chamber is inserted and secured a concentric shell 10 which divides said upper chamber into a cold air passage 11 and a warm air passage 12. The cold air passage is the space between the jacket 6 and said shell 10, and the warm air passage is the space between said shell 10 and the adjacent walls of the dome 1.

Said shell 10 is supported upon the legs 13 with its lower edge spaced above the adjacent face of the transverse partition or frame 7 for the purpose of permitting the flow of air beneath the same from the cold air passage 11 to the warm air passage 12. The top edge of the walls of said shell coincides substantially with the upper edge of the walls of the jacket 6.

The warm air chamber above the dome 1 is provided with a baffle structure which comprises a horizontally disposed, rectangular frame 14, above the opening of which is spaced and supported a horizontal baffle plate 15; this baffle structure is for the purpose of retarding, somewhat, the upward flow of air through the warm air chamber so as to cause it to impinge more closely upon the walls of said dome and become more highly heated than it otherwise would.

Within the lower portion of said combustion chamber is located a burner 2 for the use of a gaseous or a liquid fuel as desired, or it may be electrically heated. Free access to said burner is had through a door 16 which is hinged at 17 and is yieldably retained in its closed position by a coil spring 18. Superposed upon the upper edge of the jacket 6 and suitably attached thereto is a floor register 19, the upper face of which is intended to be flush with the surface of the floor. The upper edge of the shell 10 has close contact with the under face of said register whereby that portion of said register which is above the passage 11 serves as a cold air inlet and that portion of said register which is above the passage 12 and its warm air chamber serves as a warm air outlet.

The openings 20 lead into and are a portion of the lower chamber 9, and are for the ingress of air thereto as are also the openings 21; this arrangement of said lower chamber conserves and utilizes the heat that is imparted thereto by said heat generating member 2.

I claim the following:

1. In a floor furnace, a dome, the lower portion of which forms a combustion chamber, heat-generating means located in said combustion chamber, a flue leading from said combustion chamber for the egress of the products of combustion, an upwardly diagonally extending baffle plate interposed between said heat generating means and said flue, a jacket surrounding said dome with its side walls spaced from the side walls of said dome and extending thereabove whereby an intervening air space is formed, which is

divided by a transversely extending diaphragm or partition into two vertically related chambers, a concentrically arranged shell within the upper one of said chamber with its walls positioned intermediate the walls of said dome and the walls of said jacket, the lower edge of the walls of said shell being spaced above the adjacent face of said diaphragm whereby said upper chamber is divided into a vertically extending cold air passage and a warm air passage, and a floor register forming the top of and completing said structure.

2. In a floor furnace, a dome, the lower interior portion of which is adapted to contain a heat-generating means, heat-generating means within said lower portion of said dome, a flue leading from said lower portion of said dome for the egress of products therefrom, an upwardly, diagonally-extending baffle plate interposed between said heat-generating means and said flue, a jacket surrounding said dome with its side walls spaced from the side walls of said dome whereby an intervening air chamber is formed which is divided transversely below its center by means of a transverse diaphragm or partition into two vertically related chambers, perforations in said diaphragm for the passage of air from said lower to said upper chamber, a concentrically arranged shell within the upper of said air chambers with its walls positioned intermediate the walls of said dome and said jacket the lower edge of the walls of said shell being spaced above the adjacent face of said diaphragm, and the upper edge thereof coinciding substantially with the upper edge of the side walls of said jacket whereby said upper chamber is divided into two concentric passages for the purpose specified, and a floor register forming the top of and completing the furnace.

In testimony whereof I affix my signature.

EDWARD E. LEACH.