Aug. 12, 1941. W. C. BAILEY 2,252,112

SCARFING MACHINE

Filed Aug. 25, 1939 2 Sheets-Sheet 1

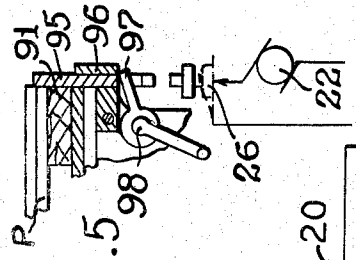


Fig. 5




Fig. 1




Fig. 2

Inventor

William C. Bailey

By Charles L. Reynolds

Attorney

Aug. 12, 1941. W. C. BAILEY 2,252,112

SCARFING MACHINE

Filed Aug. 25, 1939 2 Sheets-Sheet 2

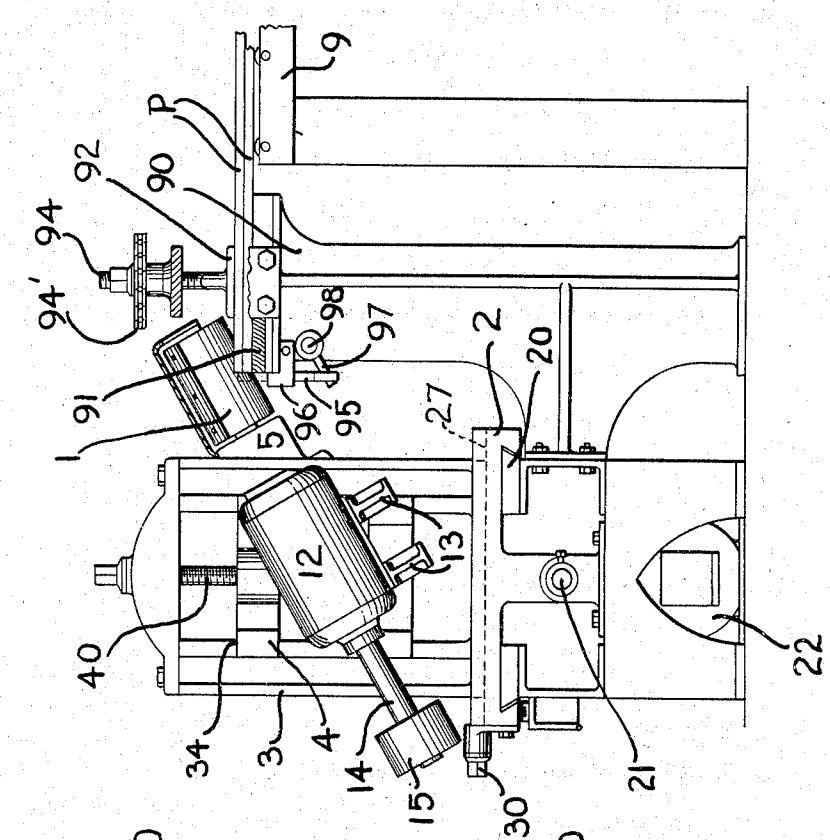


Fig. 4

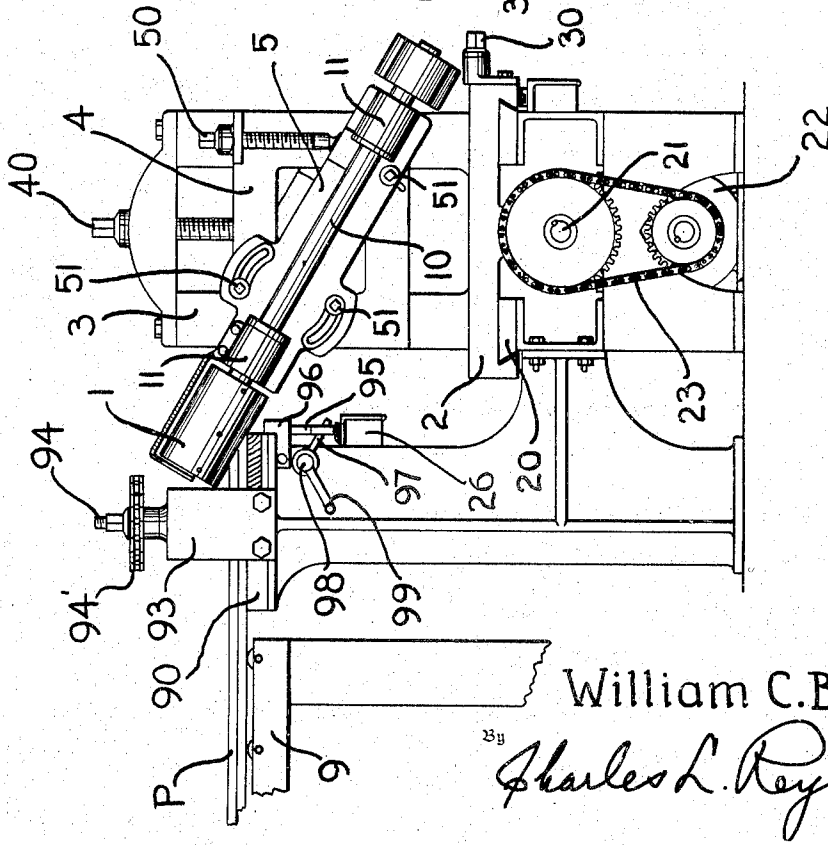


Fig. 3

Inventor
William C. Bailey
By
Charles L. Reynolds
Attorney

Patented Aug. 12, 1941 2,252,112

# UNITED STATES PATENT OFFICE

2,252,112

## SCARFING MACHINE

William C. Bailey, Seattle, Wash., assignor to United States Plywood Corporation, Seattle, Wash., a corporation of New York

Application August 25, 1939, Serial No. 291,923

4 Claims. (Cl. 144—117)

In a copending application, Serial No. 291,924, filed August 25, 1939, I have disclosed a process for scarf-jointing plywood panels and the like, and the present invention is concerned with a machine for scarfing the edges of the panels preparatory to joining them.

Such panels are made up by joining normal length panels with a scarfed joint to make up extra-length panels economically and with sufficient strength, particularly across the joints. One of the prerequisites of such a joint is an accurately scarfed edge on each of the panels that are to be joined, formed by machinery in such a way as to insure accuracy and economical operation. It is the primary object of the present invention to provide a machine which will accomplish the scarfing operation, having in mind the above consideration.

In performing such a scarfing operation it is necessary to accommodate the machine to panels of varying thickness, and to construct the machine in such manner that the width of the scarfed joint may be varied in accordance with the user's desires or requirements. Accordingly, one of the objects of the invention is to provide a scarfing machine for such a purpose as has been indicated, which is capable of various adjustments to accomplish the above ends.

It is a further necessity, in such a scarfing operation, that the scarfing be done very accurately, which implies that the edge of the panel that is to be scarfed must be adjusted precisely to the proper position. It is a further object of the invention to provide stops or gauge means for positioning the plywood panel accurately, and preferably additional means to clamp and hold the panel in accurate position.

It is also an object to provide means which will eliminate automatically any possibility that the cutter heads may be moved relatively to the panels during such time as the stop means are upraised to a position wherein they would be in the path of the cutter heads.

With these and other objects in mind, as will appear hereafter, my invention comprises the novel machine and the novel parts thereof, and the novel combination and arrangement of the same, all as is shown in the accompanying drawings, described in this specification, and as will be more particularly defined by the claims which terminate the same.

In the accompanying drawings I have shown my invention embodied in a form which is, at present, preferred by me, it being understood that various changes may be made in the form, character, and arrangement of the parts without departure from the spirit of my invention, as hereinafter defined.

Figure 1 is a plan view of the scarfing machine; Figure 2 is an end elevation thereof from the operating end, and Figures 3 and 4 are side elevations from respectively opposite sides, parts being broken away and shown in section in Figure 4 for better illustration; Figure 5 is a sectional diagram, illustrating the feed motor cut-out switch.

The plywood panels, one or two at a time, as preferred, are laid upon a suitable panel supporting table 9, and are moved thereover into scarfing position. The edge of the panel which is to be scarfed rests upon a flat table part 90 furnished with a wooden edge board 91, and the member 90 is provided with a clamp 92 extending entirely across the table and cooperating with the portion 90 of the table to clamp the panels P when the latter are in properly adjusted scarfing position. The clamp 92 is held or guided in suitable supports 93, and is vertically movable by screw means 94 at each end, connected by the chain 94' for simultaneous operation.

In order to accomplish the adjustment of the panels to accurate scarfing position, preparatory to clamping them in such position, the edge of the table has several stop fingers 95 held in guides 96 for vertical movement. These fingers are normally positioned below the level of the table, and preferably below the edge board 91, but may be raised into the path of the panels, and precisely in alignment with the edge board, by fingers 97 carried by a rock shaft 98. The fingers 97, engaging in holes through the finger 95, raise or lower the latter. Rocking of the shaft is accomplished under control of the control lever 99 (see Figures 2 and 3).

The gauge or stop fingers 95 are thus seen to effect accurate positioning of an edge of the panel which is to be scarfed, and the line thus established is, in effect, the base line to which the remainder of the machine conforms.

A rotary cutter head 1, carried upon a shaft 10, is supported for movement precisely parallel to the base line referred to above, and at a scarfing angle with respect to the positioned edge of the panel. In effect, the cutter head and its shaft are mounted upon a carriage 2 guided upon a guide 20 carried by the fixed frame, the guide 20 being precisely parallel to the positioned edge of the panel, that is, to the line established by the stop fingers 95. Movement of the carriage along this line is accomplished in any suitable

manner, as for instance, by a rotatable feed screw 21 driven by a feed motor 22 through suitable drive or transmission means 23. The feed screw 21, journaled in the frame, engages a nut 24 (Figure 2) which is carried by the carriage 2. Switches 25 at the ends of the travel of the carriage may be engaged by adjustable fingers 25' carried by the carriage, to de-energize the feed motor 22 automatically when the carriage reaches either end of its travel, as is customary in such machinery.

There is a further safety means provided in the circuit of the feed motor 22. Obviously, if the stop fingers were projected upwardly, and if it were then attempted to feed the cutter head across the edge of the panel, whether or not the cutter head were rotating, considered damage would ensue by reason of engagement of the cutter head with the stop fingers 95. Accordingly, automatic means are provided to cut out and de-energize the motor 22 whenever the fingers 95 are upraised, these stop means becoming ineffective only when the fingers are fully retracted below the level of the table part 90. To this end a switch 26 is included in the circuit of the feed motor 22, in the nature of a normally open or self-opening push button, and is so positioned with respect to one of the fingers 95, or to some part of the mechanism which operates these fingers (see Figures 2 and 3), that the switch 26 is depressed and closed only when the fingers 95 are fully down, to which position they are moved by rocking the shaft 98 by the arm 99. As soon as these fingers start upwardly by an operator who moves the arm 99 counterclockwise, as seen in Figure 3, the switch 26 automatically opens and cuts out the feed motor 22.

It will be understood that it will be desired to make a wider scarf under some conditions than under other conditions; for instance, the thicker the panels to be joined, the wider, in proportion, the scarf joint should be, within reason. It will be obvious, too, that it will be necessary at times to effect bodily vertical or bodily transverse adjustment of the cutter head with respect to the positioned edge of the panel. To these ends the cutter head is mounted for such adjustments.

The upright 3 is guided in transverse guides 27 of carriage 2 for the transverse adjustment, such adjustment being accomplished by the adjusting screw 30. The vertical adjustment is accomplished by means of a slide 4 which is guided at 34 upon the upright 3 for vertical adjustment relative thereto, this vertical adjustment being accomplished by the adjusting screw 40. It is desired to point out that each of these elements, the slide 4 and the upright 3, are provided with a central aperture.

The angular adjustment is accomplished by means of an arm 5 adjustable angularly in a plane transverse to the positioned edge of the panel, upon the vertical slide 4. Such adjustment is accomplished by means such as the adjusting screw 15 acting upon the arm 5, upon which, in journals 11, the cutter head shaft 10 is carried. The arm 5 is secured in any adjusted position by the clamp screws 51.

The motor 12 for rotating the cutter head 1 is carried upon a motor support 13 which is supported upon the arm 5, but which is preferably extended through the central apertures of the upright 3 and the slide 4, so that the motor 12 lies at the opposite side of the upright 3 from the cutter head shaft, and the whole assembly is thereby better balanced, and more easily handled. Any suitable driving connection is established between the motor shaft 14 and the cutter head shaft 10, this driving connection being shown in the form of a belt 15 passing over suitable pulleys on the two shafts.

In operation one or two panels are placed upon the table 9 and advanced until their edge to be scarfed lies approximately parallel to the edge of the board 91. The fingers 95 are then raised, the cutter head being withdrawn to one end of its travel, where it is out of the path of the panel. The panels are moved up into engagement with the upraised fingers 95, are then clamped into position with the clamp 92, and the fingers 95 are then depressed. The cutter head having been adjusted to the proper position and angle, the feed motor 22 is energized, this being permitted because the fingers 95 have been depressed. Feed motor 22 moves the cutter head, the latter rotating under the influence of its motor 12, across the positioned edge of the panel. The cutter head is so adjusted that it just scarfs down to the edge board 91, at the proper angle, and with the panel held in proper position exactly aligned with the carriage guide 20, and the cutter head being fixed relative to the carriage 20 while it moves therealong. The edges of the panels are scarfed with accuracy scarcely possible otherwise. Upon reaching the end of its travel the carriage 2 stops and may be reversed, and the panels are now ready for application of adhesive, preparatory to engaging and pressing them, as is disclosed in my companion application referred to above.

What I claim as my invention is:

1. A scarfing machine comprising a panel supporting table, stop means retractable beneath the surface, and disposed at an edge of the table, to engage, when projected, and to position an edge of a panel which rests upon the table, means to project and to retract such stop means, a cutter head disposed at a scarfing angle to and for engagement with such positioned panel edge, a carriage, means guiding the carriage for movement parallel to such positioned panel edge, a frame, of the cutter head and table one being supported upon the frame in fixed position and the other being supported upon the carriage for relative movement, electrical means to effect such relative feeding movement, and means included in the circuit of said electrical feeding means, and operatively connected to the stop means, to hold the circuit open so long as the stop means are projected, and thus to interdict operation of the feeding means.

2. A scarfing machine comprising a fixedly positioned panel supporting table, stop fingers normally retracted below its surface, but projectible thereabove, and positioned along one edge, to engage and position an edge of a panel which is to be scarfed, means to project and to retract such stop fingers, a clamp operatively associated with the table to grip and hold a panel thus positioned, a carriage guided for movement parallel to such positioned panel edge, an electric motor so to move said carriage, a cutter head carried upon said carriage, in scarfing position relative to the positioned panel edge as it moves therepast, in a path which includes the projected positions, but not the retracted positions, of said stop fingers, and means included in the circuit of the carriage's motor, and operatively connected to the stop fingers, to hold the motor circuit open so long as the stop fingers are projected.

3. A scarfing machine comprising a fixedly positioned panel supporting table, means engageable with a panel which rests upon the table to position the edge thereof which is to be scarfed, a carriage guided for feeding movement parallel to such positioned panel edge, a centrally apertured upright guided upon the carriage for adjustment transversely of the feed direction of the carriage, a centrally apertured slide guided upon the upright for adjustment vertically, an arm guided upon the slide for relative angular adjustment in a plane transverse to the feed direction, a motor support carried by said arm and extending through the apertures of the slide and the upright, a cutter head and shaft therefor journaled upon the arm in scarfing relation to the positioned panel edge, a motor upon the motor support, at the opposite side of the upright, a drive connection between the motor and the cutter head shaft, and means to feed the carriage along the panel edge.

4. A scarfing machine comprising a panel supporting table, a cutter head disposed at a scarfing angle relative to the edge of a panel which is supported upon said table, a frame, a carriage guided upon the frame for transverse movement, of the cutter head and table one being supported upon the frame in fixed position and the other being supported upon the carriage, means to effect such relative movement, whereby there is relative feeding movement of the cutter head in a given path with respect to the table and the panel upon the latter, panel-edge gauging means carried by the table and movable between a retracted position and a projected position wherein it engages and positions the edge of the panel which is to be scarfed, and lies within the cutter head's path, manually operable means so to shift the gauging means, and means, operatively associated with said feeding means, and positioned for engagement by said manually operable means, to prevent movement of the cutter head in its path, until the gauge-shifting means have been moved to gauge-retracted position, wherein the gauge means are out of the cutter head's path.

WILLIAM C. BAILEY.