US 20020013621A1

(19) United States

(12) Patent Application Publication

(10) Pub. No.: US 2002/0013621 A1

(43) Pub. Date: Jan. 31, 2002

Stobie et al.

(54) HEART VALVE HOLDER FOR CONSTRICTING THE VALVE COMMISSURES AND METHODS OF USE

(76) Inventors: **Robert Stobie**, Mission Viejo, CA (US); **Jerry L. Jackman**, Tustin, CA (US); **Cuong Ton-That**, Irvine, CA (US); **C. Roger Ekholm**, Rancho Santa Margarita, CA (US); **Steve Newborg**, Riverside, CA (US)

Correspondence Address:
Debra D. Condino, Reg. no. 31,007
Edwards Lifesciences LLC
Law Dept.
One Edwards Way
Irvine, CA 92614 (US)

(21) Appl. No.: **09/746,431**

(22) Filed: **Dec. 21, 2000**

Related U.S. Application Data

(63) Continuation-in-part of application No. 09/626,570, filed on Jul. 27, 2000, now abandoned.

Publication Classification

(51) **Int. Cl.**[7] **A61F 2/24**; A61F 11/00

(52) **U.S. Cl.** **623/2.11**; 606/108

(57) **ABSTRACT**

An improved holder, system and method for implanting a tissue-type prosthetic heart mitral valve that constricts the commissure posts of the valve and allows the user to detach the handle of the holder prior to withdrawing the holder itself. The ability to remove the handle allows a surgeon greater access to suturing the prosthetic valve to the mitral annulus. The holder may include two relatively movable plates, one of which attaches to the valve sewing on the inflow end of the valve ring and the other which attaches via sutures to the valve commissures on the outflow end. Separation of the plates places the sutures in tension and constricts the commissures. An adjusting member or adapter is interposed between the handle and holder to enable separation of the two plates and removal of the handle. The adjusting member or adapter may be packaged with the valve and holder combination, or may be sold as a separate unit, possibly with the handle, so that prior art holders can be retrofit.

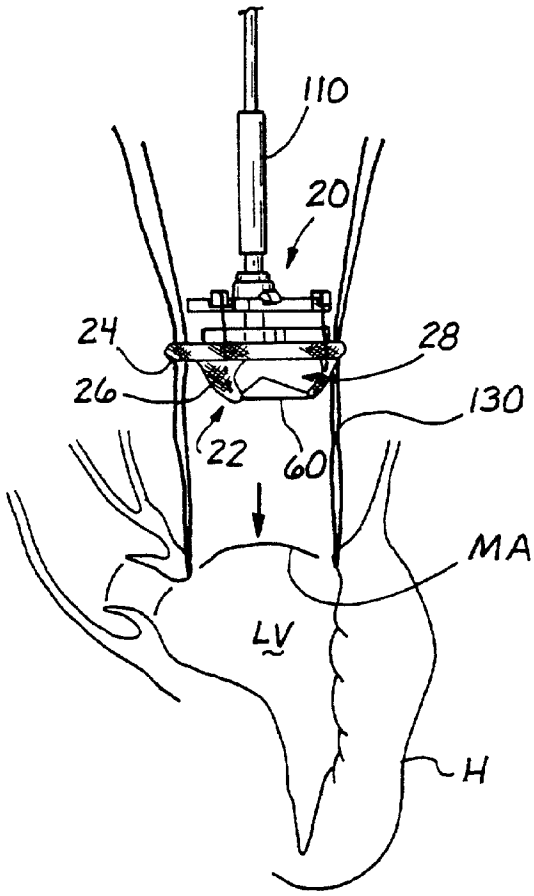

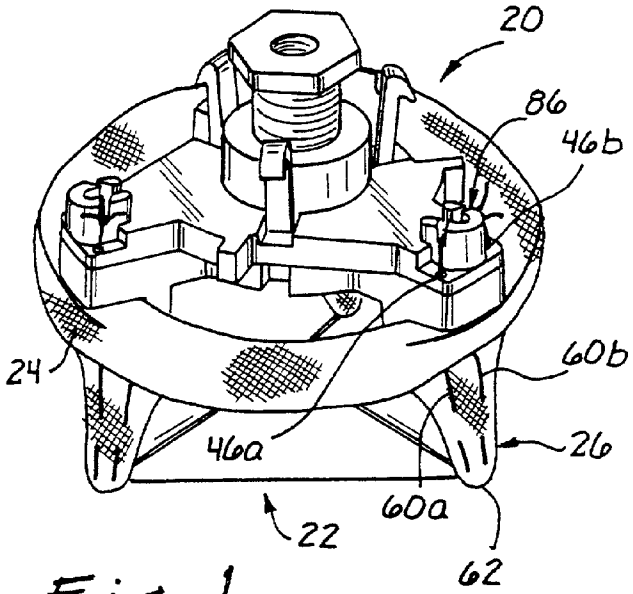

Fig. 1

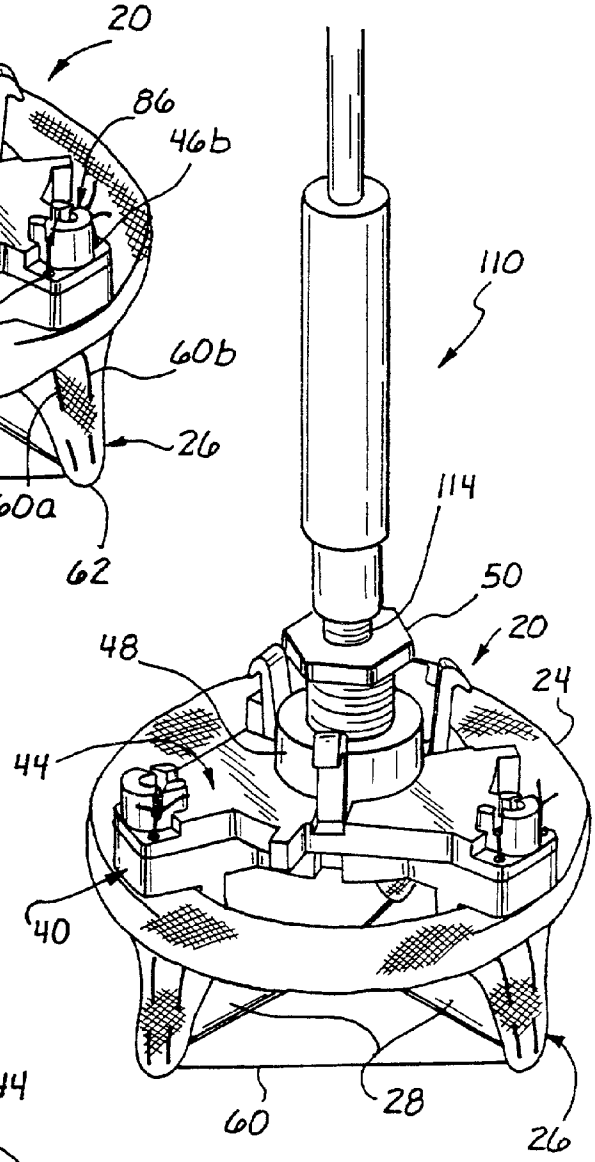

Fig. 2

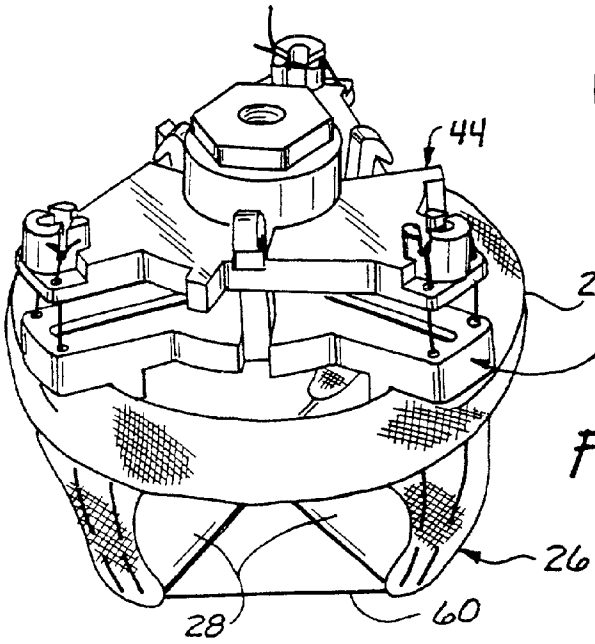

Fig. 3

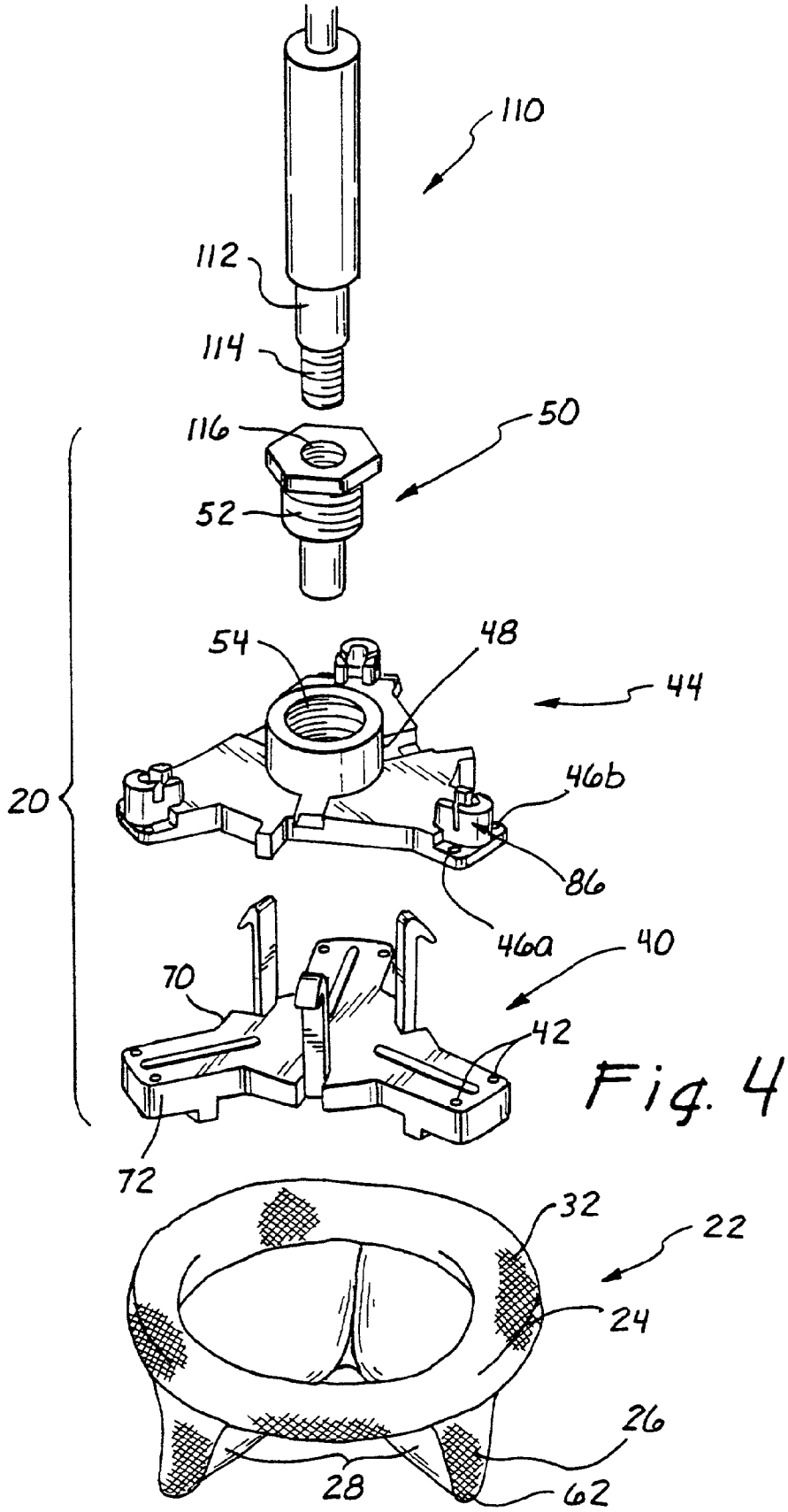
110
112
114
116
50
52
54
48
44
20
46b
86
46a
40
70
42
72
32
22
24
26
28
62

Fig. 4

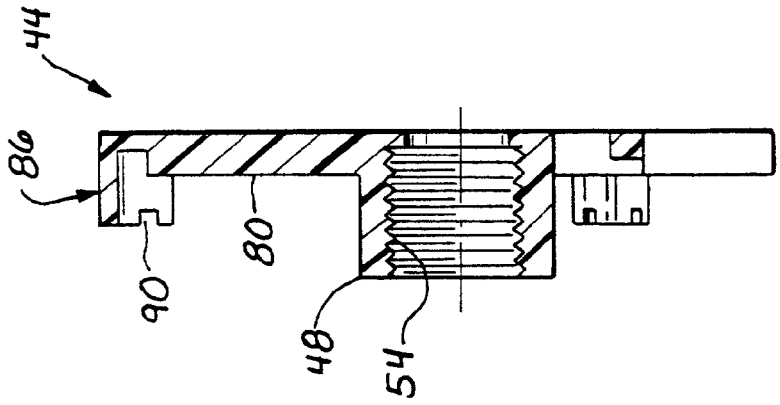

Fig. 5B

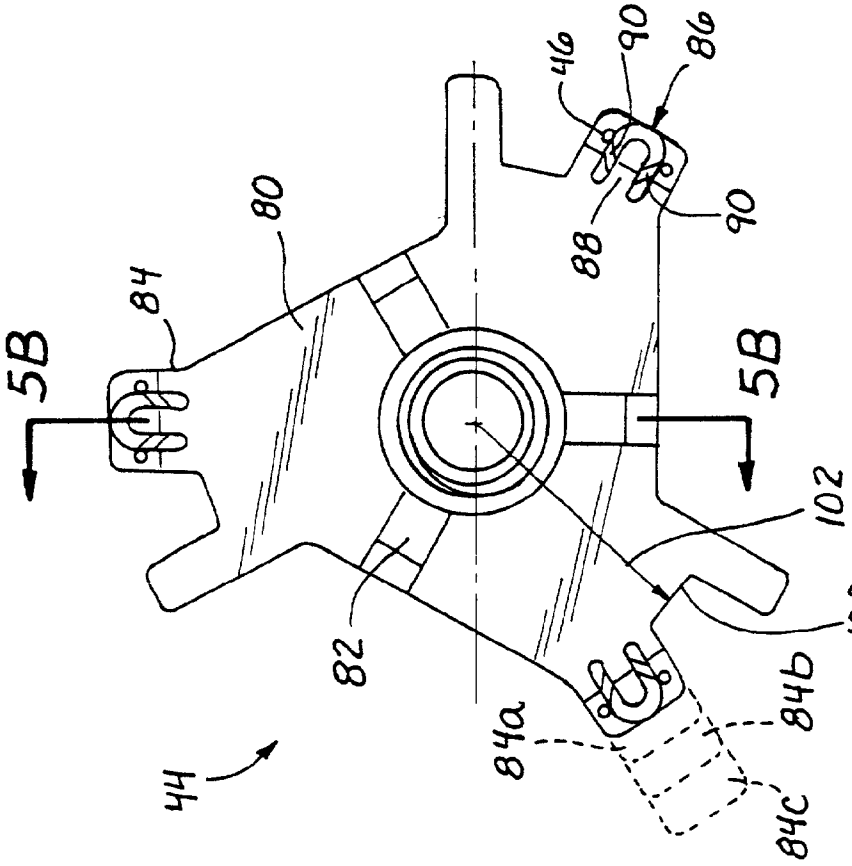

Fig. 5A

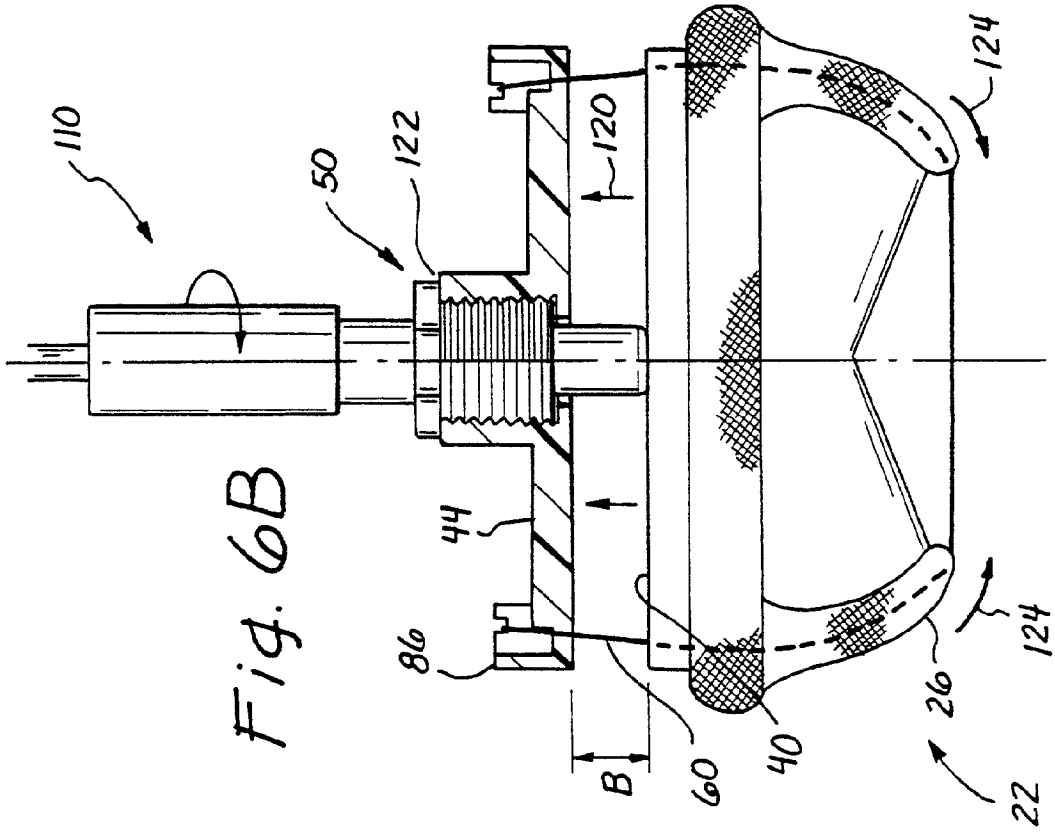
110
50
122
120
124
44
86
60
B
40
26
124
22

Fig. 6B

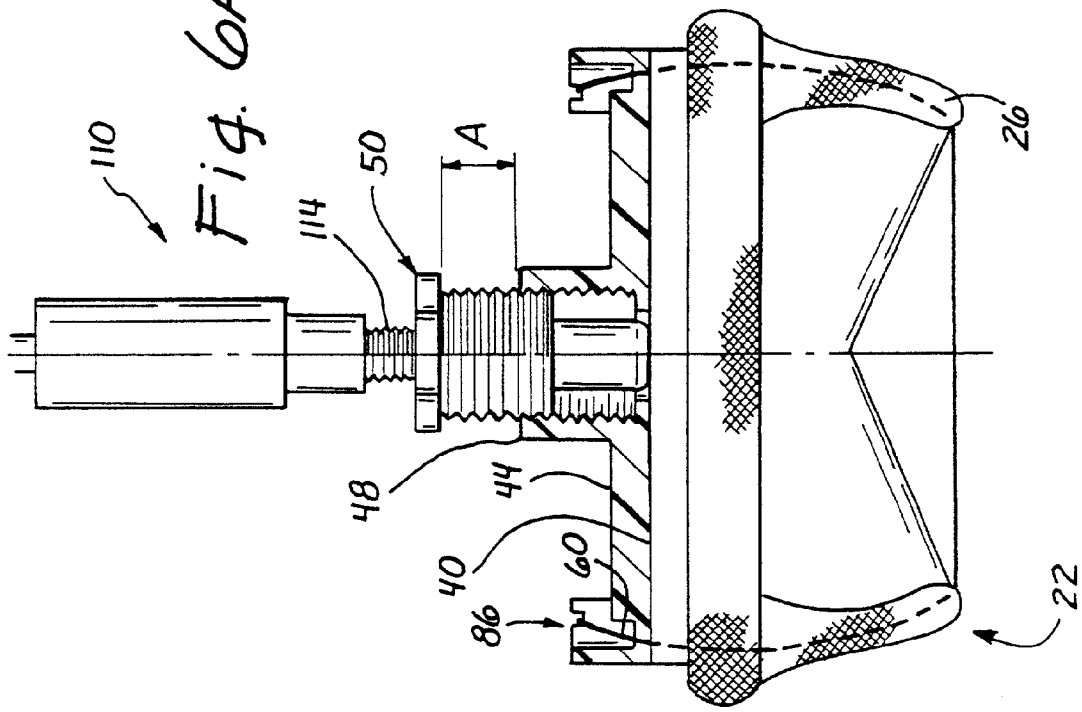
110
114
50
A
26
48
44
40
60
86
22

Fig. 6A

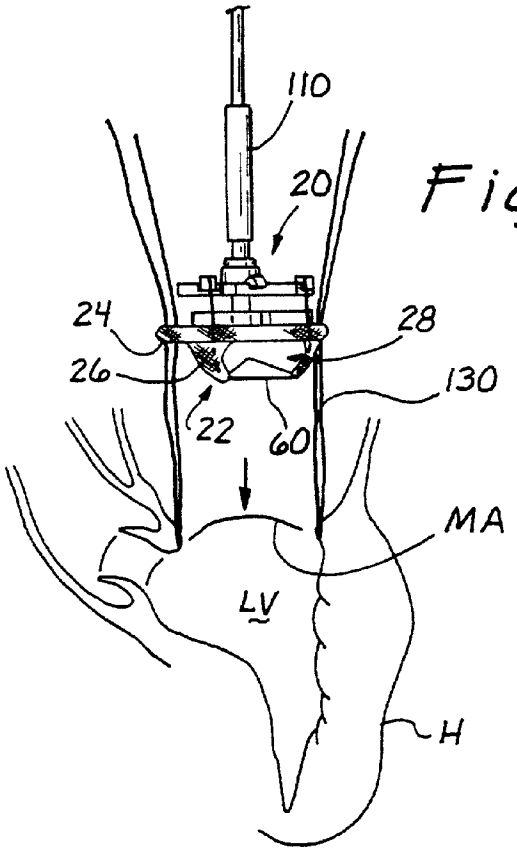

Fig. 7A

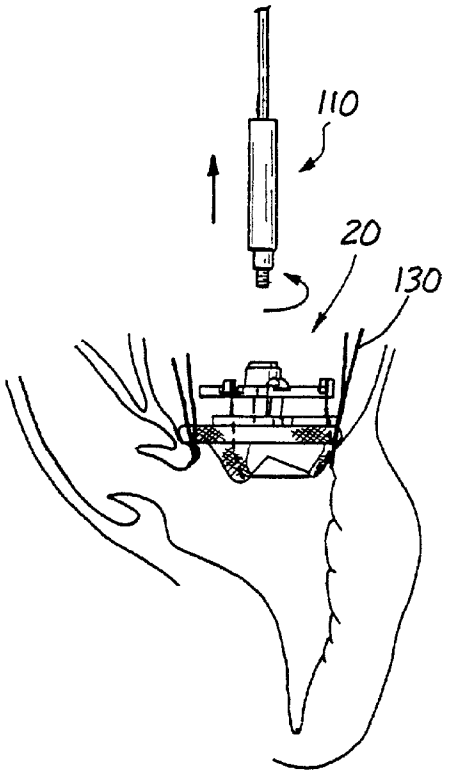

Fig. 7B

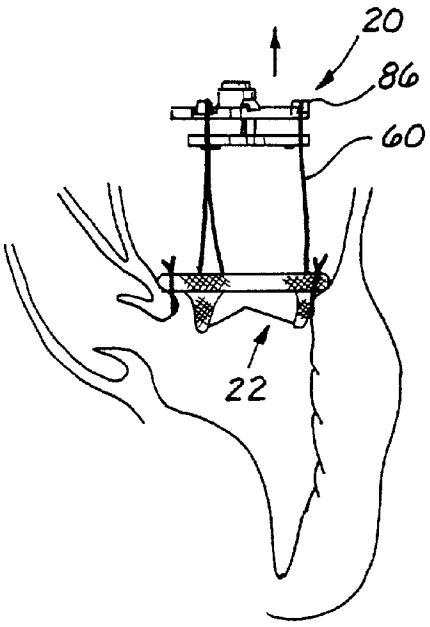

Fig. 7C

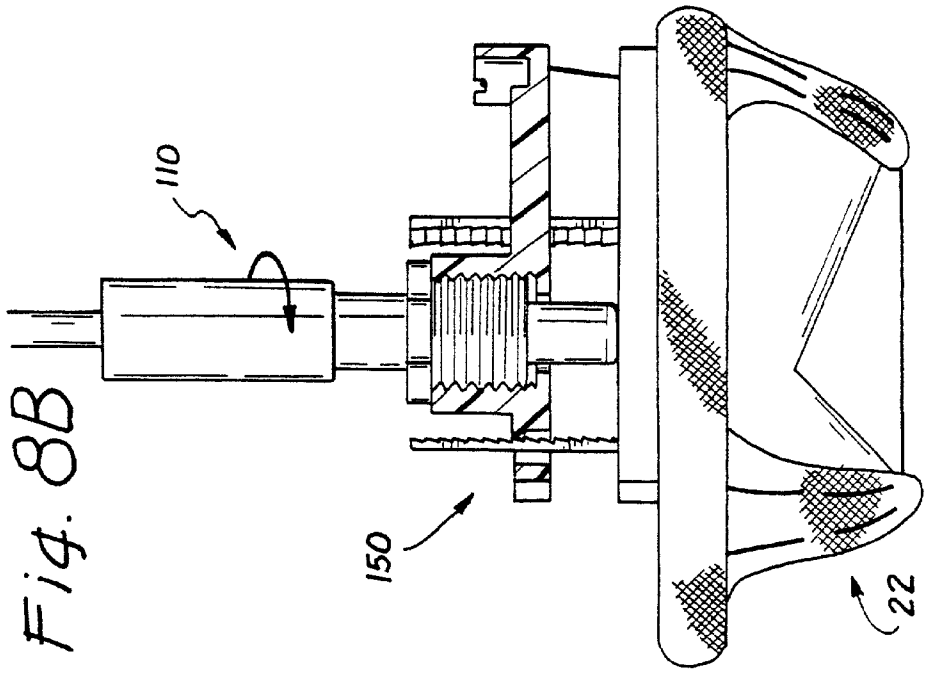

Fig. 8B

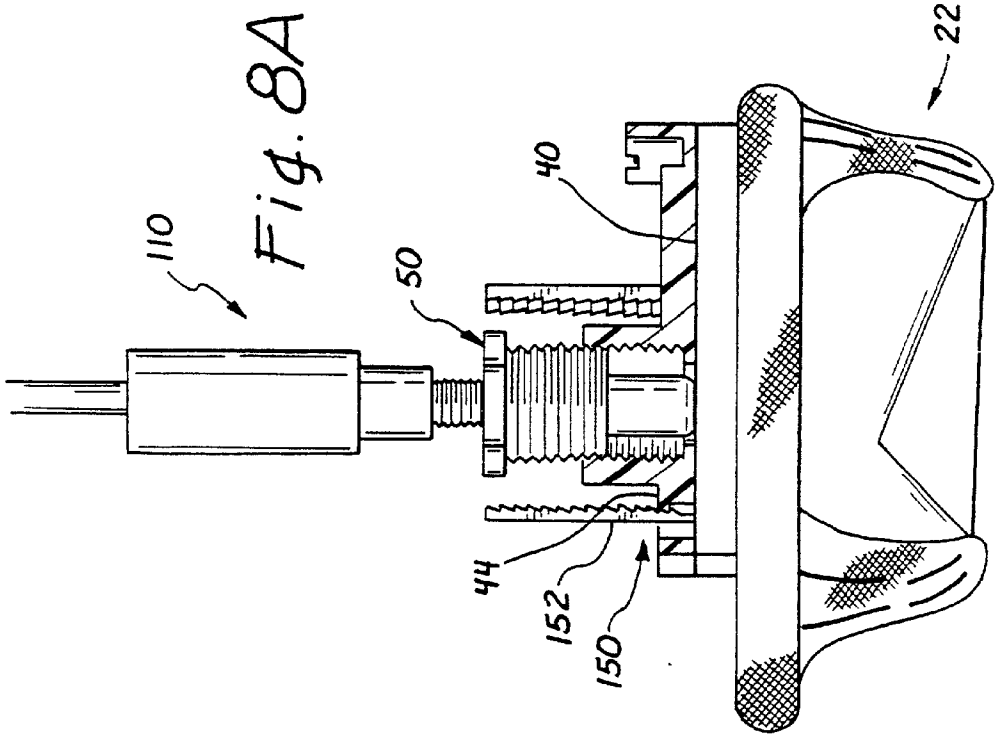

Fig. 8A

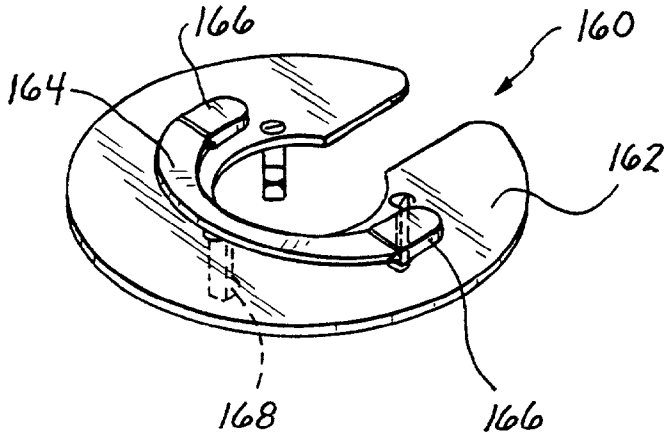

Fig. 9A

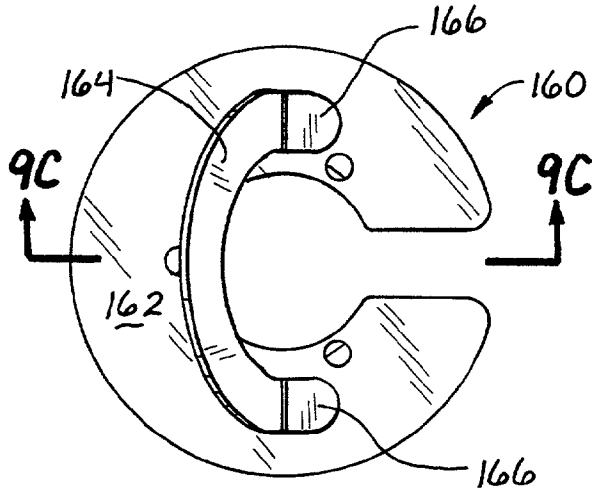

Fig. 9B

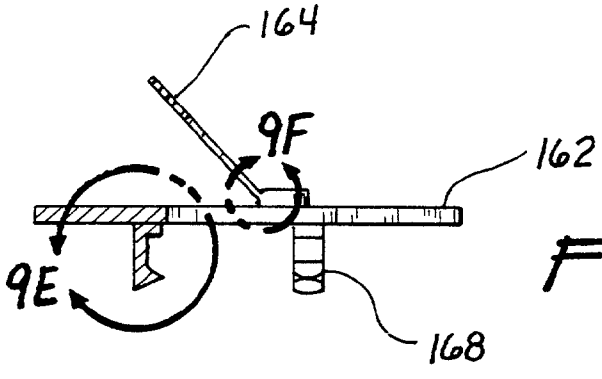

Fig. 9C

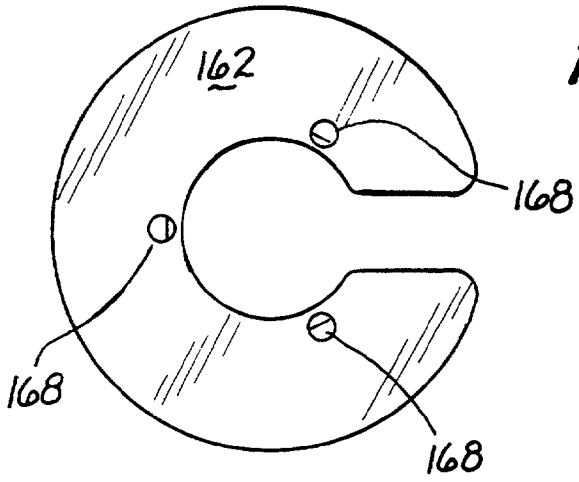

Fig. 9D

Fig. 9E

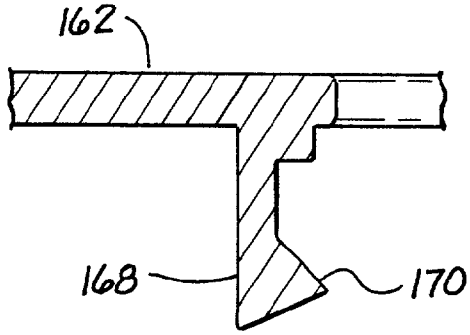

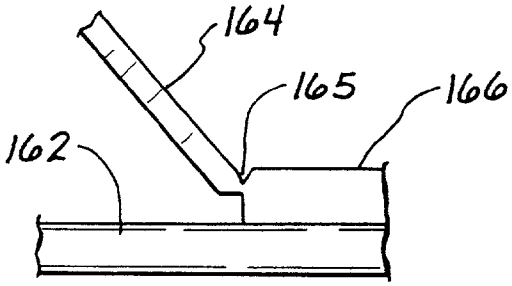

Fig. 9F

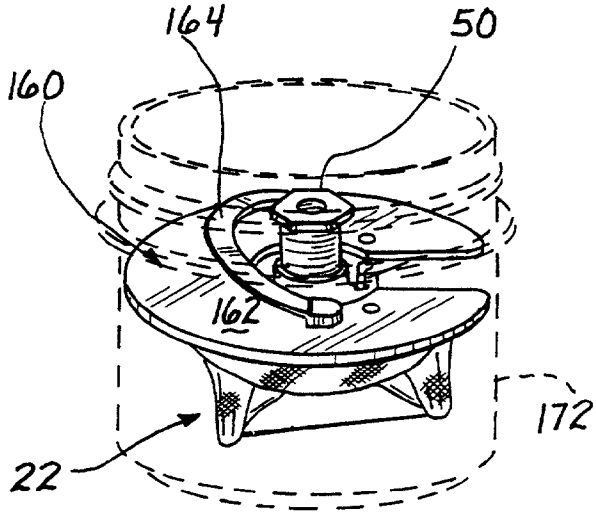

Fig. 10

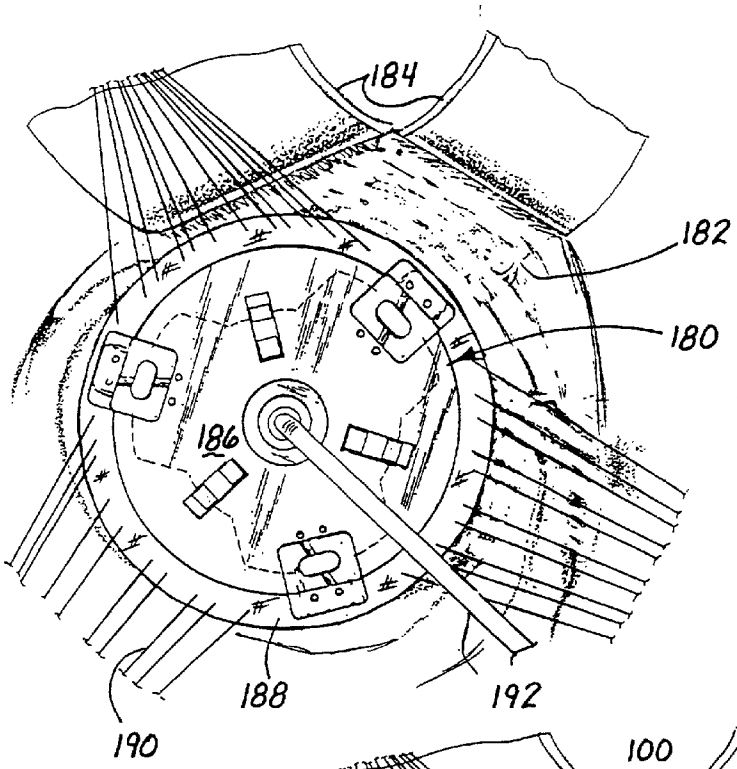

Fig. 11A

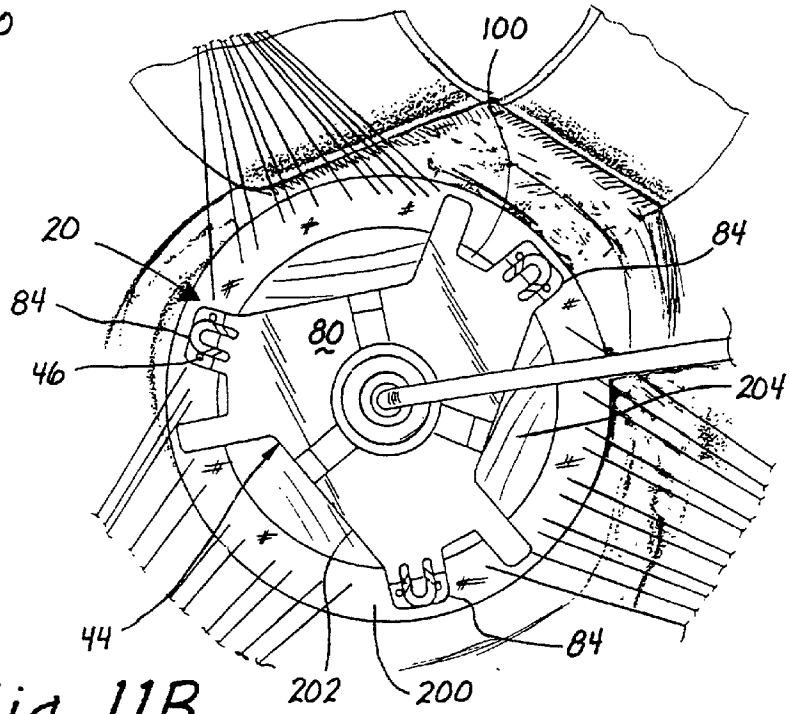

Fig. 11B

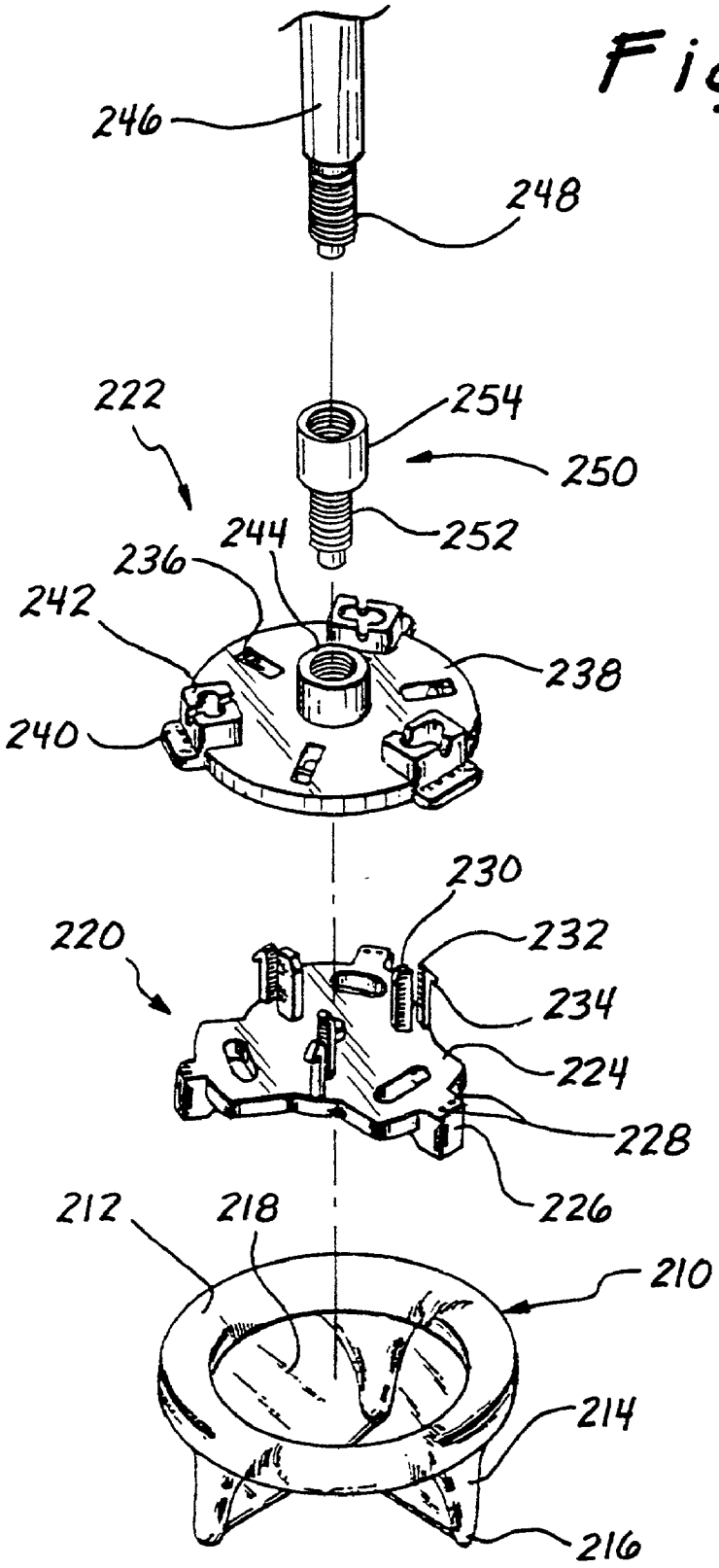
246
248
222
254
250
252
244
236
242
238
240
230
220
232
234
224
228
226
212
218
210
214
216

Fig. 12A

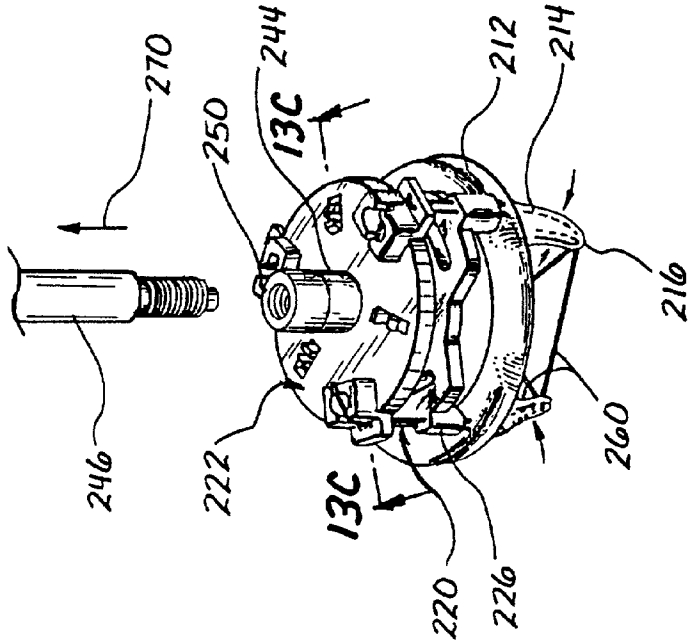

Fig. 12C

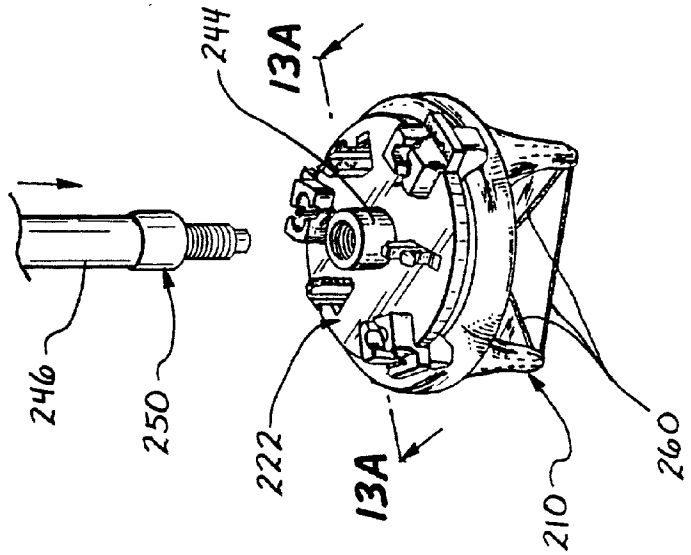

Fig. 12B

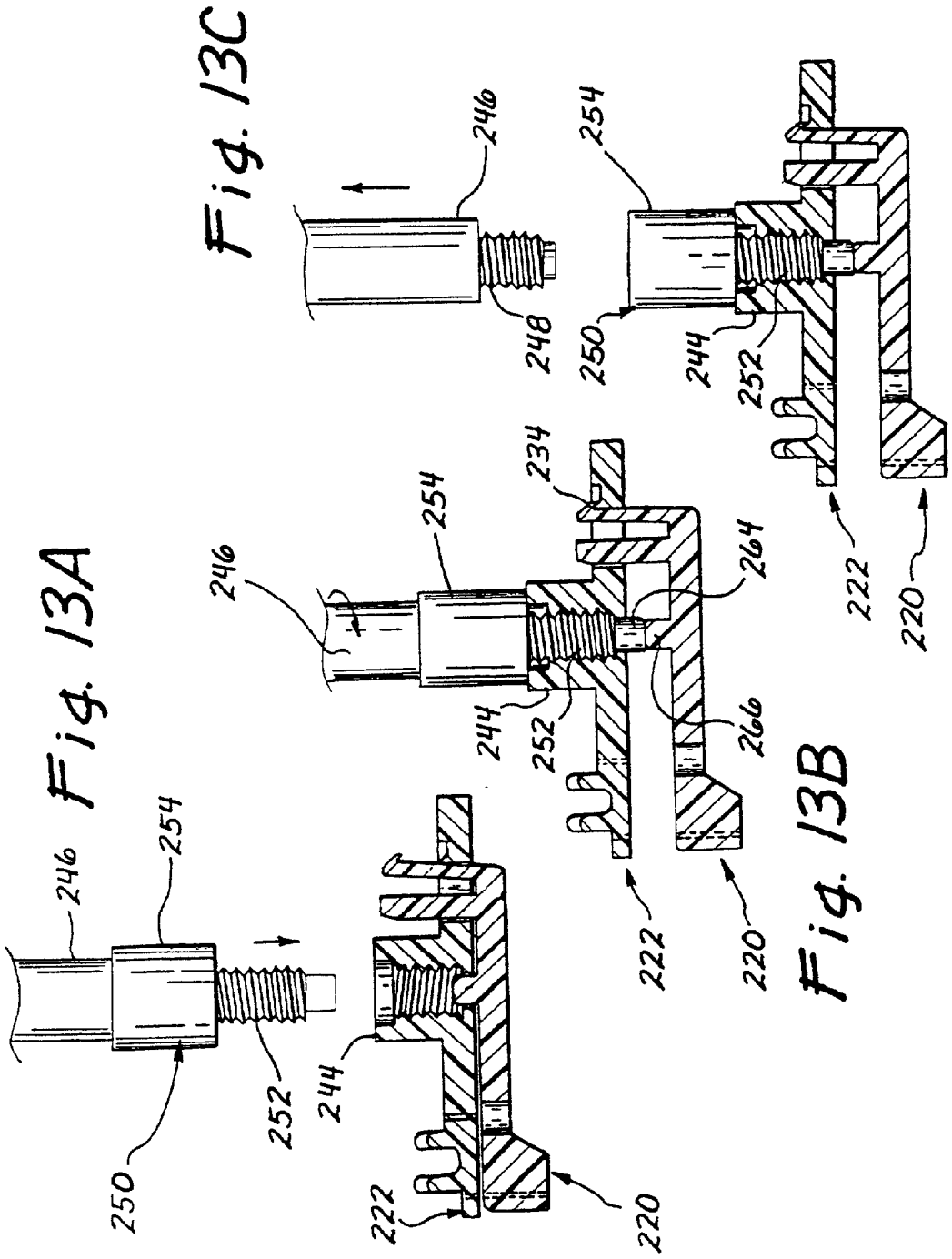

Fig. 13A

Fig. 13B

Fig. 13C

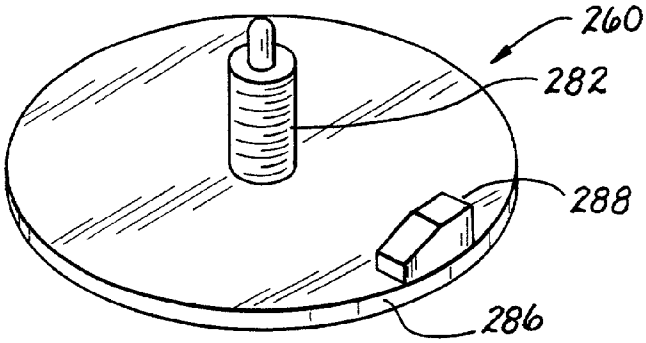

Fig. 14A

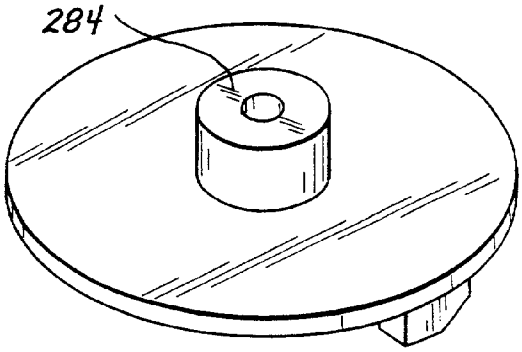

Fig. 14B

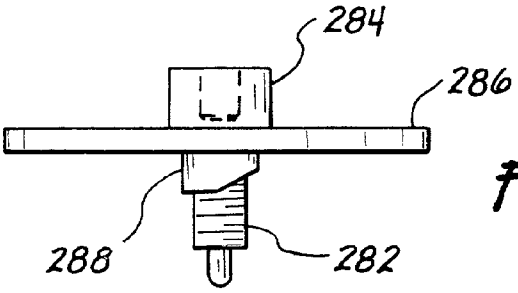

Fig. 14C

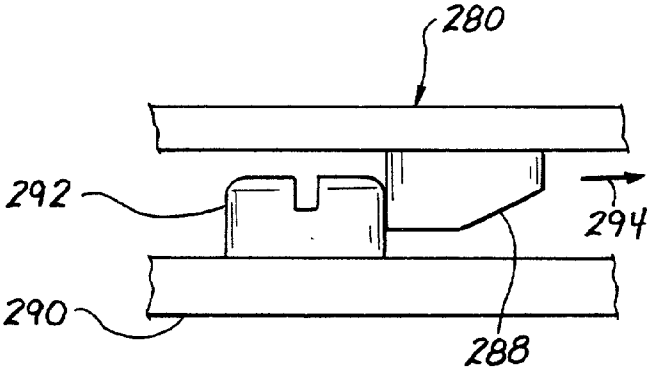

Fig. 15

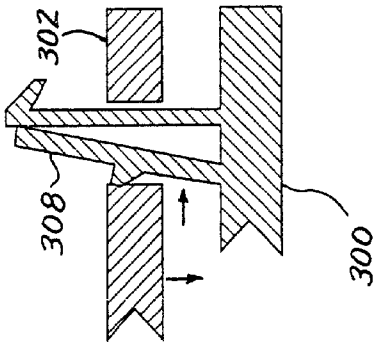

Fig. 16C

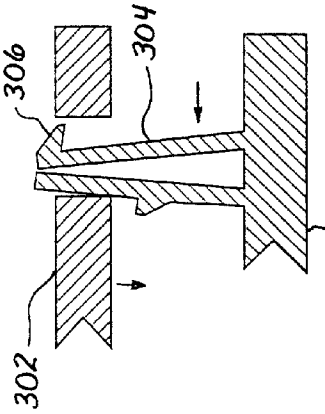

Fig. 16B

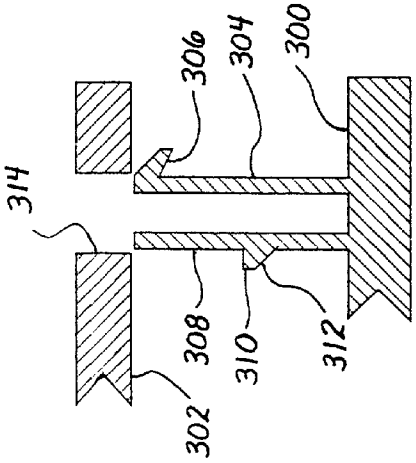

Fig. 16A

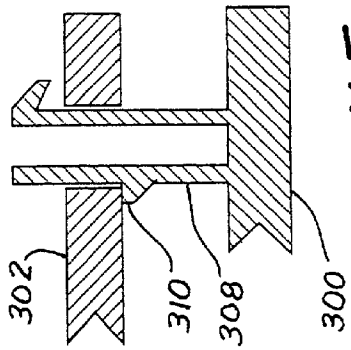

Fig. 16F

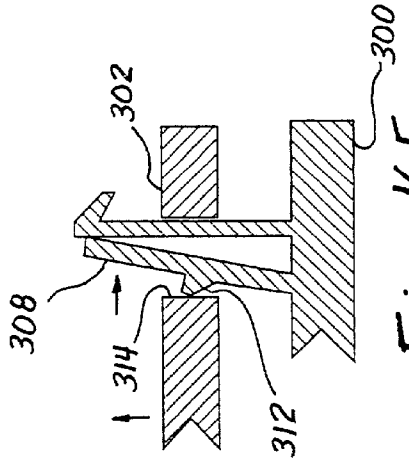

Fig. 16E

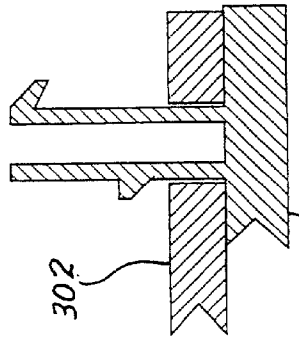

Fig. 16D

HEART VALVE HOLDER FOR CONSTRICTING THE VALVE COMMISSURES AND METHODS OF USE

RELATED APPLICATION

[0001] The present application is a continuation-in-part of U.S. application Ser. No. 09/626,570, filed Jul. 27, 2000.

FIELD OF THE INVENTION

[0002] The present invention relates generally to medical devices, and more particularly to an apparatus for facilitating the implantation of a bioprosthetic replacement heart valve, and associated methodology.

BACKGROUND OF THE INVENTION

[0003] In mammalian animals, the heart is a hollow muscular organ having four pumping chambers: the left and right atria and the left and right ventricles, each provided with its own one-way valve. The natural heart valves are identified as the aortic, mitral (or bicuspid), tricuspid and pulmonary valves and have leaflets to control the directional flow of blood through the heart. The valves are each mounted in an annulus that comprises a dense fibrous ring attached either directly or indirectly to the atrial or ventricular muscle fibers. Various surgical techniques may be used to repair a diseased or damaged valve. In a valve replacement operation, the damaged leaflets are excised and the annulus sculpted to receive a replacement valve.

[0004] Two primary types of heart valve replacements or prostheses are known. One is a mechanical-type heart valve that uses a ball and cage arrangement or a pivoting mechanical closure to provide unidirectional blood flow. The other is a tissue-type or "bioprosthetic" valve which is constructed with natural-tissue valve leaflets which function much like a natural human heart valve's, imitating the natural action of the flexible heart valve leaflets which form commissures to seal against each other to ensure the one-way blood flow. In tissue valves, a whole xenograft valve (e.g., porcine) or a plurality of xenograft leaflets (e.g., bovine pericardium) provide occluding surfaces that are mounted within a surrounding stent structure. In both types of prosthetic valves, a biocompatible cloth-covered sewing or suture ring is provided on the valve body, for the mechanical type of prosthetic valve, or on the inflow end of the stent for the tissue-type of prosthetic valve.

[0005] In placing a tissue type prosthetic valve in the mitral position, the commissure posts are on the blind side of the valve and may become entangled with pre-installed sutures, and may damage the annulus or tissue during delivery. The difficulty of the delivery task is compounded if the surgery is through a minimally-invasive access channel, a technique that is becoming more common. The problem of entanglement is termed "suture looping," and means that the suture that is used to attach or mount the valve to the heart tissue is inadvertently wrapped around the inside of one or more of the commissure post tips. If this occurs, the looped suture may damage one of the tissue leaflets when tightly tied down, or at least may interfere with valve operation and prevent maximum coaptation of the valve leaflets, resulting in a deficiency in the prosthetic mitral valve.

[0006] Some attempts have been made to overcome these problems in current holders for prosthetic mitral valves. An example of such a holder is U.S. Pat. No. 4,865,600, Carpentier, et al., incorporated herein by reference. Carpentier provides a holder having a constriction mechanism that constricts the commissure posts inwardly prior to implantation. The Carpentier device provides an elongate handle to both hold the valve/valve holder combination during implantation, as well as to cause the commissure posts to constrict inwardly. The valve is connected to the valve holder by the manufacturer using one or more sutures, and the combination shipped and stored as a unit. During the valve replacement procedure, the surgeon connects the handle to the holder and locks a locking nut to hold the commissure posts at a given constricted position. The surgeon then attaches the sewing ring of the valve to the native valve annulus with an array of sutures that has been pre-embedded in the annulus and extended outside the body. The valve is then advanced along the array of sutures to its desired implantation position and the sutures tied off. When the holder is cut free, the commissure posts are released to expand and the holder may be removed using the handle. The inability to remove the elongate handle while maintaining commissure constriction is a detriment. The handle must be attached to the holder so that the commissure posts remain in a constricted position during attachment of the array of sutures to the sewing ring. This can be awkward for manipulation of the valve/valve holder combination during this time-constrained operation. Further, the relatively wide holder periphery may interfere with the attachment step.

[0007] What is needed then is an improved tissue-type prosthetic valve holder attachable to the inflow end of the valve that can constrict the commissure posts with or without a handle being attached, yet provides improved visibility and accessibility to the surgeon during the valve attachment steps.

SUMMARY OF THE INVENTION

[0008] The present invention provides a holder for a tissue-type prosthetic heart valve having an inflow end and an outflow end and a flow axis therebetween. The valve includes an annular suture ring at the inflow end attached to a stent having posts circumferentially-spaced about the flow axis that support occluding tissue surfaces of the valve. In this type of valve the posts are cantilevered generally in the outflow direction.

[0009] The holder includes a valve abutment portion sized and shaped to abut the suture ring at the inflow end of the valve. The holder further includes a commissure post constriction mechanism adapted to constrict the commissure posts radially inward from a relaxed position to a constricted position when actuated by a handle adapted to operatively connect to the commissure post constriction mechanism. A retaining mechanism is also provided that retains the commissure post constriction mechanism in the constricted position after the handle is removed.

[0010] In one embodiment the commissure post constriction mechanism comprises an adjusting portion and an adjusting member adapted to adjust the distance between the adjusting portion and the valve abutment portion and one or more filaments attached to the adjusting portion and sutured through the end of the commissure posts distal the adjusting

portion. When the adjusting member is operated to separate the adjusting portion from the valve abutment portion the adjusting portion pulls the filaments, which in turn urge the end of the commissure posts distal the adjusting portion radially inwardly, to the constricted position.

[0011] The valve abutment portion may be of a planar shape, with the adjusting portion of a substantially complementary planar shape to the valve abutment portion. It is preferred that the planar shape of the valve abutment portion be comprised of a plurality of tangs radiating from a central body to each cover a portion of the suture ring. In this manner a sufficient amount of the suture ring is left exposed to allow for suturing the suture ring to the native annulus.

[0012] Adjustment of the distance between the valve abutment portion and the adjusting portion may be achieved by providing a central threaded aperture in the adjusting portion and an adjusting member that cooperates with this threaded aperture. In this construction the end of the adjusting member proximal the valve abutment portion abuts the valve abutment portion during operation. When the adjusting member is advanced through the central aperture of the adjusting portion it pushes the valve abutment portion and the two portions separate.

[0013] A handle may be operatively connected to the adjusting member to turn it by providing a handle that has an externally threaded end portion and an adjusting member having a central longitudinal threaded bore sized to receive the threaded end of the handle. When the handle is introduced into the bore it is rotated in a first direction and will seat in the threaded bore of the adjusting member. Further rotation of the adjusting member separates the adjusting portion from the valve abutment portion, as recited above, and causes the commissure posts to constrict inwardly.

[0014] In the prior art the handle would have to remain attached during suturing of the suture ring to the host tissue to keep the commissure posts in the constricted position. The holder with the handle connected were removed by severing the filament(s) and removing the holder, handle and filaments together.

[0015] In accordance with the present invention, the adjusting member itself may be adapted to be the retaining mechanism. Preferably, the adjusting member threads create a greater frictional resistance with the threaded aperture of the adjusting portion than that between the threaded end of the handle and the threaded bore of the adjusting member. This frictional resistance between the adjusting member and the central aperture allows the handle to be further rotated in a second, opposite direction, and the handle will detach or unscrew from the adjusting member without moving the adjusting member, leaving the commissure posts in the constricted position. The tug of the filaments themselves on the adjusting portion when the commissure posts will cause the adjusting member/central aperture thread interface to bind and so may be used to achieve the requisite additional frictional resistance required for allowing the handle to be unscrewed.

[0016] In alternative embodiments other mechanisms may be used in accordance with the invention to act as the retaining mechanism. For example, a ratchet assembly may be provided to lock the valve attachment and adjusting portions apart, allowing the handle to be removed while leaving the commissure posts in the constricted position. A ratchet assembly may be comprised of a one or more toothed members affixed to the valve abutment portion that each engage a complementary notch, opening or, for example, a pawl affixed to the adjusting portion. As the valve abutment portion and the adjusting portion are separated by the adjusting member the successive teeth of the toothed member engage the notch, opening or pawl affixed to the adjusting portion, locking the two portions apart.

[0017] The present invention further provides a method for retrofitting a holder for a tissue-type prosthetic mitral heart valve attachable to a surgical delivery handle. The heart valve is of the type having an inflow end and an outflow end and a flow axis therebetween, and includes an annular suture ring at the inflow end and radially flexible commissure posts circumferentially-spaced around the outflow end that support occluding tissue surfaces of the valve. The holder has a commissure post constriction mechanism releasably attached to the sewing ring at the inflow end of the valve, the mechanism adapted to constrict the valve commissure posts radially inward from a relaxed position to a constricted position when actuated by the delivery handle. The method includes providing a retaining mechanism that retains the commissure post constriction mechanism in the constricted position after the delivery handle is removed. The retaining mechanism may be provided during the holder assembly process so that the retaining mechanism is attached to and shipped as a unit with the prosthetic valve. Alternatively, the retaining mechanism may be provided separately from the holder and valve combination and the method includes coupling the retaining mechanism to the holder at the time of surgical implantation of the valve. The retaining mechanism and delivery handle may be packaged and sold as a unit. The retaining mechanism desirably comprises an adapter that is interposed between and threadingly engaged to the holder and the handle.

[0018] Further in accordance with the invention a method for replacing a heart valve is provided, comprising the steps of removing an existing heart valve to leave an annulus of that heart valve, attaching a holder of the invention to a prosthetic tissue-type heart valve and constricting the commissure posts of the prosthetic heart valve with a handle; inserting the valve through the annulus of the heart valve; removing the handle while leaving the commissure posts in the constricted position; suturing the tissue-type heart valve to the heart annulus, and detaching the holder from the prosthetic heart valve.

[0019] After suturing the heart valve to the annulus the surgeon severs the filament, causing the posts of the stent to open to the relaxed, operational position. The severing of the filament(s) also releases the holder from the prosthetic heart valve, allowing it to be removed.

[0020] A further understanding of the nature and advantages of the present invention are set forth in the following description and claims, particularly when considered in conjunction with the accompanying drawings in which like parts bear like reference numerals.

BRIEF DESCRIPTION OF THE DRAWINGS

[0021] **FIG. 1** is a perspective view of a heart valve holder of the present invention assembled to the inflow side of a tissue-type heart valve;

[0022] **FIG. 2** is a perspective view of the holder/heart valve assembly, showing an actuating and delivery handle attached to the holder;

[0023] **FIG. 3** is a perspective view of the holder/heart valve assembly showing an adjusting portion retracted to cause inward movement of the valve commissure posts;

[0024] **FIG. 4** is a perspective view of the valve holder of the present invention exploded from a tissue-type heart valve;

[0025] **FIG. 5A** is a plan view of an adjusting portion of the holder of the present invention;

[0026] **FIG. 5B** is a sectional view through the adjusting portion of the holder, take along line **5B-5B** of **FIG. 5A**;

[0027] **FIGS. 6A and 6B** are partial sectional views of the holder of the present invention attached to a heart valve wherein the commissure posts of the valve are, respectively, relaxed and biased inwardly;

[0028] FIGS. **7A-7C** illustrates several steps in the implantation of a tissue-type valve in the mitral position using the holder of the present invention;

[0029] **FIGS. 8A and 8B** are partial sectional views of an alternative holder of the present invention attached to a heart valve wherein the commissure posts of the valve are, respectively, relaxed and biased inwardly;

[0030] **FIG. 9A** is a perspective view of an exemplary storage and handling clip that attaches to a holder of the present invention;

[0031] FIGS. **9B-9F** are various views of the handling clip of **FIG. 9A**;

[0032] **FIG. 10** is a perspective view of the handling clip attached to a holder and valve combination and placed within a storage container shown in phantom;

[0033] **FIG. 11A** is a plan view of a heart valve holder of the prior art attached to a heart valve and delivery handle during a step of implantation into a valve annulus;

[0034] **FIG. 11B** is a plan view of a heart valve holder of the present invention attached to a heart valve and delivery handle during a step of implantation into a valve annulus;

[0035] **FIG. 12A** is an exploded perspective view of a valve, holder, handle and adapter combination of the present invention;

[0036] FIGS. **12B-12C** are perspective assembled views of the combination of **FIG. 12A** showing two steps of operation thereof to constrict commissures of the heart valve;

[0037] FIGS. **13A-13C** are sectional views of the holder, handle, and adapter combination of **FIG. 12** showing several steps of operation;

[0038] FIGS. **14A-14C** are several views of an alternative adapter for use with a valve holder of the present invention;

[0039] **FIG. 15** is a partial elevational view of the interaction between a pawl on the adapter of **FIG. 14** and a raised feature on a valve holder to ensure positive engagement therebetween; and

[0040] FIGS. **16A-16F** are several sectional views of a portion of an alternative holder of the present invention showing a further apparatus for maintaining commissure constriction.

DESCRIPTION OF THE PREFERRED EMBODIMENT

[0041] The present invention provides an improved heart valve holder for tissue-type prosthetic heart valves that facilitates implantation and reduces the chance of suture entanglement. The holder of the present invention is particularly useful for prosthetic mitral heart valves having commissure posts on the outflow side supporting flexible leaflets therebetween. The mitral position is such that the outflow side (and commissure posts) projects distally toward the left ventricle during implantation, and thus the holder must be attached to the inflow (i.e., accessible) side of the valve. Delivery of the valve to the mitral position involves sliding the valve down a plurality of sutures that have been pre-installed around the annulus and then passed through the valve sewing ring. The holder of the present invention constricts the commissure posts radially inward and thus helps prevent the posts from becoming entangled in the array of pre-installed sutures. This benefit is thus particular to the situation where the outflow side (and commissure posts) of the heart valve extends distally during delivery, which is the case in the mitral position. Nonetheless, the holder of the present invention may prove useful for the implantation of heart valves in other than the mitral position, and thus the invention may be applicable thereto.

[0042] With reference now to FIGS. **1-3** an exemplary holder **20** of the present invention is shown attached to a tissue-type heart valve **22**. The heart valve **22** includes an annular sewing ring **24** on an inflow side, and a plurality of commissure posts **26** projecting generally axially in the outflow direction. The holder **20** attaches to the sewing ring **24** on the inflow side of the valve **22**, which also is the proximal (i.e., accessible) side during implantation. That is, commissure posts **26** project distally toward the outflow side of the valve **22**.

[0043] **FIGS. 2 and 3** illustrate a plurality of flexible leaflets **28** that are supported by and extend between the commissure posts **26**. The leaflets **28** provide the occluding surfaces of the valve **22**, and may be made of individual pieces of bovine pericardium, for example. Alternatively, the leaflets **28** may be part of an entire xenograft, or homograft. In the former instance, natural porcine (pig) valves are particularly useful. Therefore it should be understood that the leaflets **28** may be formed of a variety of materials, none of which is limiting with respect to the present invention. In addition, there are preferably three such leaflets **28** corresponding to three commissure posts **26**.

[0044] Various constructions for the heart valve **22** are known, which may include metallic or plastic stent elements, a silicone or urethane insert for the sewing ring **24**, biocompatible fabric (i.e., polyester) covering around one or more of the elements, etc. In a preferred embodiment, the heart valve **22** includes an internal metallic wireform (not shown) having an undulating shape with a plurality of arcuate cusps connected by upstanding commissures. The wireform commissures provide internal structure for the commissure posts **26** of the valve, and are somewhat flexible

so as to be able to flex or cantilever inward. The holder **20** of the present invention facilitates this flexing, though the invention is generally directed toward causing the inward movement of the commissure posts. Of course, other internal constructions of heart valve **22** having movable commissure posts are available, with which the holder **20** of the present invention may function equally as well.

[**0045**] With reference still to FIGS. **1-3**, and also **FIG. 4**, the holder **20** of the present invention includes three relatively movable elements. A plate-like valve abutment portion **40** lies against the inflow side **32** of the sewing ring **24**, and includes a plurality of through holes **42** around its periphery. A plate-like commissure adjusting portion **44** generally mirrors the shape of the valve abutment portion **40**, and also includes a plurality of peripheral through holes **46**. The adjusting portion **44** further includes a centrally located and internally threaded boss **48** that projects in a proximal direction from the otherwise generally planar adjusting portion. Finally, an adjusting member **50** having external threads **52** thereon is sized to mate with the internal threads **54** of the boss **48**

[**0046**] A plurality of filaments or sutures **60** are shown in FIGS. **1-3** partly extending between the tips **62** of the commissure posts **26**. Because there are three commissure posts **26**, there are at least three lengths of sutures **60** extending therebetween in a triangular configuration. Each length of suture **60** spans two of the commissure posts **26**, and threads proximally along the post and through the sewing ring **24** to be attached to the holder **20**. This is seen best in the perspective view of **FIG. 1**. Specifically, each suture **60** passes through the holes **42** in the valve abutment portion **40** and attaches to the adjusting portion **44**. The specifies of the attachment of each suture **60** will be explained below.

[**0047**] As mentioned, the abutment portion **40**, adjusting portion **44**, and adjusting member **50** are relatively movable. That is, the adjusting portion **50** is adapted to cause relative axial displacement between the abutment portion **40** and the adjusting portion **44**. Because the abutment portion **40** remains against the sewing ring **24**, the adjusting portion **44** translates proximally away from the abutment portion, and attached valve **22**. This is seen in **FIG. 3**. Because the sutures **60** attach to the adjusting portion **44**, they are also pulled in the proximal direction. Moreover, because each suture **60** threads in a distal direction along and between two of the commissure posts **26**, proximal movement of the adjusting portion **44** thus shortens the amount of each suture between the commissure post tips **62**. This shortening causes radially inward movement of the tips **62**, with the commissure posts **26** eventually flexing inward from their structural point of attachment within the valve **22** adjacent the sewing ring **24**.

[**0048**] Now with reference to **FIGS. 4 and 5**A-5B, structural details of the holder **20** of the present invention will be explained. As mentioned above, the valve abutment portion **40** is generally plate-like, and preferably includes a central, generally triangular body **70** having three outwardly extending tangs **72** at the apices thereof. Two through holes **42** are providing in each of the tangs **72**, spaced apart along an imaginary circle centered in the triangular body **70**. Three upstanding pins or legs **74** having hooks **76** project from the proximal face of the body **70**, preferably inward and between each two tangs **72**.

[**0049**] The adjusting portion **44**, as best seen in **FIG. 5**A, also includes a generally triangular plate-like body **80** that is sized similar to the body **70** of the abutment portion **40**. In this regard, the adjusting portion **44** includes a plurality of channels **82** on the face opposite the valve abutment portion **40** that received the hooks **76** of the upstanding legs **74** such that the plate-like bodies **70** and **80** can be juxtaposed against one another, though their separation distance is limited. The hooks **76** thus effectively prevent disengagement of the attaching portion **44** and the abutment portion **40** once the two are coupled together. The adjusting portion **44** also includes three outwardly extending tangs **84** at the apices of the triangular body **80**. Like the abutment portion **40**, two through holes **46** are provided on each of the tangs **84**, and are spaced apart along an imaginary circle centered in the body **80**. Preferably, each through hole **46** in the adjusting portion **44** aligns with a through hole **42** in the valve abutment portion **40** when the holder **20** is assembled.

[**0050**] Each tang **84** features a suture cutting guide **86** that projects from the proximal face of the body **80**. Each cutting guide **86** includes a central cutting recess **88** defined between a pair of suture grooves **90**. A cutting recess **88** extends generally radially, while the suture grooves **90** are angled with respect thereto. The depth of the suture grooves **90** is less than the depth of the cutting recess **88**, as seen in **FIG. 5**B, and thus a length of suture **60** can be strung between the grooves **90** so as to be suspended over the cutting recess **88**. As seen in **FIG. 5**A, the suture grooves **90** lead into both of the through holes **46** on either side of the cutting guide **86**, such that each suture bridges the cutting recess **88** and may be bent to be secured to or pass through one of the through holes **46**. The specific arrangement of the sutures **60** will be more fully described below.

[**0051**] With reference still to **FIG. 5**A, the adjusting portion **44** further includes means for receiving clips on a removable transport template that secures the holder **20** and heart valve **22** assembly within a storage jar during transportation. Specifically, three clip-receiving notches **100** are equidistantly spaced around the periphery of the body **80**. In the illustrated embodiment, the notches **100** are disposed in a counter-clockwise direction adjacent each of the tangs **84** (as seen from the proximal face). Each of the notches **100** is spaced from the center of the body **80** a radial distance **102**, as indicated. As seen in the left of **FIG. 5**A, progressively larger holders will have progressively larger tangs **84***a*, **84***b*, **84***c* so as to enable attachment to larger valve sizes. Advantageously, the notch distance **102** remains constant for all the various sizes of the holder **20** to provide a one-size-fits-all template attachment means. That is, the same size of storage template can be used for a set of different sizes of holders. This arrangement also reduces the radial profile of the holders for larger sized valves, as the dimension of the template notches with respect to the overall perimeter is progressively reduced. This size reduction further helps to prevent snags as the holder and valve are delivered to the implantation site.

[**0052**] With reference again to the perspective views of FIGS. **1-3**, the arrangement of the discrete lengths of sutures **60** will now be described. There are desirably three equal lengths of sutures **60**, each being secured at its free end to the adjusting portion **44**. Each length of suture **60** attaches to a first tang **84** of the adjusting portion **44**, passes through the aligned holes **46** and **42** (in a first tang of the abutment

portion **40**) and through the sewing ring **24** to a first commissure post **26**. From there, the suture **60** continues axially to the tip **62** of the post **26**, and extends across the outflow side of the valve **22** to the tip of a second commissure post **26**. The suture then passes proximally along the second commissure post **26**, again through sewing ring **24**, and through aligned holes **42** and **46** in second tangs **72**, **84**, respectively, of the abutment portion **40** and adjusting portion **44**. It should be noted that each of the commissure posts **26** desirably has a fabric covering, and the sutures **60** pass at least once through the fabric covering at the tip **62** of each post.

[**0053**] At one of its free ends, the suture **60** passes between the suture grooves **90** within one of the cutting grooves **86**. Each length of suture **60** is secured at both ends to different through holes **46** in the adjusting portion **44**. Additionally, each two adjacent lengths of suture **60** are secured to the same through hole **46**. That is, as seen in **FIG. 1**, two lengths of suture, **60***a* and **60***b*, are seen extending along the closest commissure post **26** to the adjusting portion **44**. The first length **60***a* passes through the left through hole **46***b*, over the cutting guide **86**, and is secured to the right through hole **46***b*. The second length **60***b* is secured to the right through hole **46***b* and passes distally through sewing ring **24** to the commissure post **26**. The second length **60***b* does not cross the cutting guide **86**, but instead continues to the next commissure post **26** before extending proximally to the holder **20** and over its associated cutting guide **86**. In this manner, the lengths of sutures **60** can be completely disengaged from the valve **22** by simply making three scalpel cuts in each of the three cutting guides **86**.

[**0054**] The holder **20** of the present invention works in conjunction with a delivery handle **110**, as seen in **FIGS. 2 and 4**. As seen in **FIG. 4**, the handle **110** includes a shaft **112** terminating in a distal externally threaded rod **114**. The adjusting member **50** is tubular and includes internal threads **116** that are sized and configured to receive the threaded rod **114**. In addition, as mentioned above, the adjusting member **50** is externally threaded so as to mate with internal threads **54** on the boss **48** of the adjusting portion **44**. By coupling the adjusting member **50** to the boss **48**, and then the handle **110** to the adjusting member, the handle **110** connects to the holder **20**.

[**0055**] With reference to **FIGS. 6A and 6B**, use of the holder **20** to radially constrict the commissure posts **26** is shown. Specifically, **FIG. 6A** illustrates the holder **20** assembled to the heart valve **22** using the aforementioned lengths of suture **60**. In its relaxed configuration, the adjusting portion **44** lies flush against the abutment portion **42**. In this state, the adjusting member **50** is threaded part way into the boss **48** such that a distal end contacts the cavity **78** in the abutment portion **40**, but can be further advanced a distance A, as indicated. The handle **110** is shown also part way engaged with the adjusting member **50**, with the threaded rod **114** still partly showing.

[**0056**] Now with reference to **FIG. 6**B, the handle **110** has been completely screwed into the adjusting member **50**, at which point further rotation of handle **110** causes relative rotation between the adjusting member **50** and the adjusting portion **44**. In other words, actuation of the handle **110** causes relative axial movement between the adjusting member **50** and adjusting portion **44**. This axial movement is caused by advancement of the adjusting member **50** within the boss **48**, which causes the distal end of the adjusting member to push against the abutment member **42**. Because the adjusting member **50** is thus prevented from relative movement with respect to the abutment member **42**, further advancement of the adjusting member causes the adjusting portion **44** to displace away from the abutment portion **42**, as indicated by the arrows **120**. The adjusting portion **44** rides upward along the adjusting member **50** until it contacts a proximal shoulder **122**, with the resulting spacing B between the adjusting portion **44** and abutment portion **42**. Because of the attachment of the lengths of suture **60** to the adjusting portion **44**, relative movement of the adjusting portion with respect to the abutment portion **42** pulls each length of suture out of the valve **22**. This, in turn, causes inward radial contraction of the commissure posts **26**, as indicated by the arrows **124**.

[**0057**] In a preferred embodiment, the frictional resistance to rotation between the adjusting member **50** and the adjusting portion **44** is greater than the frictional resistance to rotation between the handle **110** and the adjusting member **50**. Consequently, once the commissure posts **26** have been radially constricted, as indicated in **FIG. 6**B, the handle **110** can be removed (unscrewed) from within the adjusting member **50** without causing relative rotation between the adjusting member and the adjusting portion **44**. Therefore, the holder **20** maintains the radially constricted configuration of the commissure posts **26**. This inequality in frictional rotation can be obtained in a number of ways. For example, the threaded rod **114** and associated internal threads **116** of the adjusting member **50** have a smaller diameter than the external threads **52** and associated internal threads **54** of the boss **48**. Simply by virtue of this size relationship, and corresponding lower surface area in contact, less resistance to rotation of the threaded connection between handle **110** and adjusting member **50** is obtained, all else being equal.

[**0058**] To insure the handle **110** can be removed without reversing the adjusting member **50** with respect to the adjusting portion **44**, however, the materials are chosen to enhance the inequality in frictional resistance, as mentioned above. That is, the materials of the adjusting member **50** and adjusting portion **44** are chosen so as to have a greater frictional resistance to relative sliding movement than between the materials of the handle **110** and adjusting member **50**. In one embodiment, the adjusting member **50** and adjusting portion **44** are made of the same or different polymers, while handle **110** is metal. Resistance to relative sliding movement between metal and polymer is generally less than that between two polymers. In a preferred embodiment, both the adjusting member **50** and adjusting portion **44** are made of DELRIN, while handle **110** is made a stainless-steel.

[**0059**] FIGS. 7A-7C illustrate several steps in the use of the valve holder **20** the present mentioned. **FIG. 7A** illustrates a portion of the heart H in cross-section, and specifically the left ventricle LV into which the mitral annulus MA opens. A plurality of sutures **130** is shown pre-installed within the mitral annulus MA. In a typical procedure, the sutures **130** are brought outside the body and passed through the sewing ring **24** of the prosthetic valve **22**. The handle **110** attaches to the holder **20** of the present invention which in turn is coupled to the valve **22** and operably engaged

therewith to radially constrict the commissure posts **26**. During delivery of the valve **22**, this radial constriction of the commissure posts **26** helps prevent entangled of the posts with the array of pre-installed sutures **130**. Indeed, the access passageway to the mitral annulus MA can be somewhat narrow and nonlinear, making the possibility of suture entanglement problematic. However, radial constriction of the commissure posts **26**, in conjunction with the barrier provided by the triangular suspension of sutures **60** between the commissure posts, greatly reduces the chance of entanglement. Moreover, the sutures **130** are entirely prevented by the triangular suspension of sutures **60** from contacting the valve leaflets **28**. Not only does the radial constriction of the commissure posts **26** reduce the chance of suture entanglement, but it also reduces the chance of contacting one of the posts with the surrounding anatomy.

[**0060**] After all the sutures **130** have been pre-installed in the mitral annulus MA and threaded through the sewing ring **24**, the valve **22** is lowered along the plurality of sutures **130** so that the sewing ring **24** contacts and lies flush against the mitral annulus MA, as seen in **FIG. 7B**. At this stage, the handle **110** is removed from the holder **20** to facilitate tying off of each of the sutures **130** to secure the valve **22** against the mitral annulus MA. Again, removal of the handle **110** is facilitated by the small frictional resistance to rotation between the handle and holder **20**, relative to that between the actuating portions of the holder.

[**0061**] Finally, after securing the valve **22** within the mitral annulus MA, each of the lengths of suture **60** is severed at the cutting guides **86** to facilitate removal of the holder **20** from the valve **22**. **FIG. 7C** shows the severed free ends of the points of suture **60** being pulled from within the valve **22**. The holder **20** can be removed using forceps, or handle **110** may be reattached to facilitate the removal.

[**0062**] The present invention contemplates a number of different structures that cause constriction of tissue-type valve commissure posts using a handle, while also permitting removal of the handle without releasing the commissure posts. **FIGS. 8A and 8B** illustrate a second embodiment of a holder **150** that utilizes a ratchet methodology. Without going into great detail concerning elements of the holder **150** that are similar to those described above, the alternative holder relies on one or more toothed or ratchet members **152** extending proximally from the abutment portion **40** to engage complementary opening(s) in the adjusting portion **44**. As the adjusting portion **44** is displaced away from the abutment portion **42**, ratchet members **152** retain that spacing, as indicated **FIG. 8B**. In this way, the relative frictional rotation between handle **110**, adjusting portion **44**, and adjusting member **50** is not important. Indeed, the handle **110** and adjusting member **50** can be formed as one-piece, rather than two as shown.

[**0063**] Now with reference to FIGS. **9A-9F** and **10**, use of a clip **160** as mentioned above to attach to holders **20** of the present invention during shipping and storage of an attached valve is illustrated. As illustrated, each clip **160** includes a generally planar C-shaped disk portion **162** having a semicircular handle **164** attached thereto. The clip **160** is desirably molded of a suitable polymer, with the handle **164** being formed by a semi-circular strip pivotable with respect to the disk portion **162**, with its ends attached by living hinges **165** to a pair of upstanding bosses **166**. In this respect, the handle **164** lies generally parallel to the plane of the disk portion **162** until pulled upward by the user.

[**0064**] Three fingers **168** depend downwardly from the disk portion **162** in the direction opposite the direction that the handle **164** may be lifted. Each finger **168** includes an inwardly directed pawl **170** sized to couple with a holder **20** of the present invention. More specifically, the three fingers **168** are circumferentially spaced 120° around a common axis of the holder **20** and clip **160** so as to engage the peripheral notches **100** on the adjusting portion **44** of the holder. As mentioned previously, the peripheral notches **100** for different sized valve holders are radially spaced a consistent distance from the axis. Therefore, the same size clip **160** may be used to couple to a plurality of holders for different sized valves, thus reducing the inventory of clips required. After coupling the clip **160** to the holder **20** (or adjusting member **50**), the handle **164** may be used to lower the valve **22** into a storage and shipping container **172**, as seen in **FIG. 10**. The periphery of the disk portion **162** is sized to closely fit within the container **172**, and thus prevents the valve from movement in the container during shipping.

[**0065**] The mitral valve holder **20** of the present invention provides an additional advantage over earlier mitral valve holders, such as the holder shown in U.S. Pat. No. 4,865,600 to Carpentier, et al. Specifically, prior holders such as that shown in the Carpentier patent were relatively wide in dimension so as to unnecessarily interfere with attachment of the sutures to the valve and the valve to the annulus.

[**0066**] The holder shown in the Carpentier patent, for example, includes a disk-shaped outer holder plate to which a delivery handle attaches. **FIG. 11A** illustrates a prior art holder **180** attached to the inflow end of a mitral valve during delivery of the valve into position in an annulus **182**. Various means are known for obtaining access to the annulus **22**, such as by using a pair of retractors **184** as illustrated to pull surrounding tissue away from surgical field. The outer disk-shaped plate **186** of the holder **180** may be seen occluding all of the mitral valve except for an outer peripheral portion **188** of the sewing ring. A plurality of sutures **190** is shown extending out of the surgical field through the sewing ring **188**. These sutures **190** were previously embedded in the annulus **182**, and threaded through the sewing ring **188** at a location outside the patient. Though accomplished more conveniently outside the patient, this pre-threading operation must be done after the surgical site has been exposed, and thus time is of the essence. To prevent perivalvular leakage, the array of sutures must be relatively evenly circumferentially spaced and located along a radial line, and this delicate operation may be impeded by the relatively large sized holder body **186**, and attendant reduced sewing ring visibility.

[**0067**] After the pre-threading is complete, the surgeon connects a handle **192** to the holder **180** and slides the valve and holder combination down the array of sutures **190** into position in the annulus **182**. Because the disk-shaped outer plate **186** is so large, as seen in **FIG. 11A**, the surgeon cannot see the leaflets from the inflow side of the valve. Problems sometimes arise when the forwardly directed commissures of the valve become entangled in one or more of the sutures in the array. Such entanglement may be visible through the inflow end of the valve, but as mentioned, that view is blocked by the outer plate **186**.

[0068] The present invention provides a holder permitting greater visibility of the valve to help alleviate the aforementioned problems associated with the time-critical processes of pre-threading and then sliding the valve and holder into place. **FIG. 11B** illustrates the holder **20** of the present invention attached to the inflow end of a prosthetic valve having a peripheral sewing ring **200**. The holder **20** is as described above, and like reference numerals for the various elements will be used. Namely, the holder **20** has the approximately triangular-shaped body **80** of the adjusting portion **44** with three outwardly extending tangs **84** at the triangle apices. The tangs **84** feature a pair of through holes **46** through which sutures (not shown for clarity) pass to attach the adjusting portion **44** to the sewing ring **200** of the valve.

[0069] The body **80** includes three generally linear sides **202** extending between the tangs **84** (although each side is interrupted by the aforementioned clip-receiving notches **100**). The sides **202** separate from and expose the surrounding portions of the sewing ring **200**. Indeed, the sides **202** expose the inner volume of the valve, such that leaflets **204** of the valve can be seen from the inflow end thereof. It will therefore be appreciated that the task of pre-threading the array of sutures around the sewing ring **200** is facilitated by the increased visibility of the sewing ring provided by the triangular-shaped holder **20**. More specifically, the surgeon can pre-thread the array of sutures around the sewing ring **200** with greater confidence that no sutures are placed too far radially inward or outward, and that they are evenly circumferentially spaced. At a minimum, the time needed to complete this task is reduced. Furthermore, as the valve is introduced to the surgical site along the array of sutures, the surgeon can inspect the leaflets **204** from the inflow side thus enhancing early detection of any suture looping or entanglement that will be visible from the inflow side in the form of a deformed leaflet.

[0070] The present invention may provide an improved valve holder as described above, or adapters as described below may be used to retrofit valve holders of the prior art. In particular, FIGS. **12A-12C** and **13A-13C** illustrate several embodiments of an adapter system of the present invention for use with a prior art valve holder such as that shown in U.S. Pat. No. 4,865,600 to Carpentier, et al. **FIG. 12A** shows a tissue-type mitral heart valve **210** having a sewing ring **212**, a plurality of upstanding commissures **214** with distal tips **216**, and a plurality of tissue-type leaflets **218** forming the occluding surfaces of the valve. A conventional holder such as shown in Carpentier, et al. includes a lower plate **220** configured to abut and attach to the sewing ring **212**, and an upper plate **220** that works in conjunction with the lower plate **220** to pull the commissure tips **216** of the valve **210** inward. The lower plate **220** has a generally triangular body **224** having three outwardly projecting tangs **226** each with a pair of through holes **228**.

[0071] As seen in **FIGS. 12B and 12C**, three guide posts **230** on the lower plate **220** and three locking posts **232** having outwardly directed pawls **234** pass through and mate with apertures **236** evenly circumferentially spaced around a disk-shaped body **238** of the upper plate **222**. The upper plate **222** further includes three outwardly directed flanges **240** having through holes aligned with the through holes **228** in the lower plate **220**, and three cutting guides **242** projecting upward from the disk-shaped body **238**. In addition, a central internally threaded boss **244** is adapted to receive a delivery handle of the prior art, such as shown at **246** having a male threaded end **248**.

[0072] The present invention provides an adapter **250** to be interposed between the delivery handle **246** and internally threaded boss **244**, having a distal male threaded portion **252** and a proximal female threaded portion **254**. The distal male threaded portion **252** is configured to mate with the internally threaded boss **244**, while the proximal female threaded portion **254** receives the threaded end **248** of the handle **246**.

[0073] Use of the adapter **250** is seen best in FIGS. **13A-13C**, and generally parallels the function of the adjusting member **50** previously described. As has been described previously, and in the earlier patent to Carpentier, et al., the lower plate **220** and upper plate **222** work in conjunction with the threaded delivery handle to pull the commissure tips **216** inward. **FIG. 12C** illustrates the two plates **220, 222** separated such that a plurality of sutures connected to the upper plate **222** and passing into the valve and between the commissures (seen at **260**) are placed in tension causing the commissure tips **216** to be pulled inward in the direction of the arrows **262**. FIGS. **13A-13C** illustrate the holder in cross-section and isolated from the valve to better illustrate this plate separation. In contrast to the present invention, in the prior art the delivery handle **246** had to remain threadingly engaged with the upper plate **222** to maintain the plate separation.

[0074] In contrast, the adapter **250** of the present invention permits the delivery handle **246** to be removed while maintaining plate separation. **FIG. 13A** shows the adapter **250** threadingly attached to the delivery handle **246**. The combination handle **246** and adapter **250** is then coupled to the upstanding boss **244** on the upper plate **222** and advanced so that a distal end **264** on the adapter contacts a central pin **266** on the lower plate **220**. Further advancement of the handle **246** and adapter **250** combination causes separation between the lower and upper plates **220, 222**. The separation may be limited by contact between the enlarged proximal portion **254** with the upstanding boss **244**, or by engagement of each of the three pawls **234** with corresponding features on the upper plate **222**, both shown in **FIG. 13B**. Subsequently, the delivery handle **246** may be reversed from engagement with the adapter **250** and removed from the surgical site, as seen in **FIGS. 12C and 13C**. The adapter **250** remains in the position shown in **FIG. 13C**, maintaining the separation between the lower and upper plates **220, 222**, but not interfering with the implantation operation.

[0075] There are number of ways to ensure that the handle **246** may be retracted from engagement with the adapter **250** while leaving the adapter in place. For example, and as mentioned above in conjunction with the earlier embodiment, the coefficient of friction between the materials of the engaging threads can be such that the handle **246** can be easily removed. For example, the upper plate **222** is typically molded from a polymer such as Delrin, and the adapter **250** can be formed of a similar material to produce a relatively high coefficient of friction between the respective threads. At the same time, the handle **246** may be made of stainless-steel, for example, which produces a lower coefficient friction between the male threads **248** and the female threads of the proximal adapter portion **254**. If the adapter **250** is made a suitable polymer, such as the material of the

holder, it may be coupled to the holder prior to packaging, shipping and storage. Many tissue-type heart valves are stored in a preservative solution, such as glutaraldehyde, and material of the holder and adapter **250** must be able to withstand long periods of immersion in such solutions.

[**0076**] Alternatively, the adapter **250** may also be made of stainless-steel, with the relative coefficients of friction being favorable for reversal and removal of the handle **246**. In this configuration, the adapter **250** may be sold as a separate article to be coupled with existing delivery handles to retrofit prior art systems. In this manner, both the handle **246** and adapter **250** are able to withstand the high temperatures of steam sterilization, and may be reused.

[**0077**] Another way to ensure that the adapter **250** remains coupled to the upper plate **222** while the handle **246** can be removed is to provide slightly dissimilar thread patterns on the adapter and female threads of the upper plate boss **244**. As the handle **246** and adapter **250** are threadingly engaged to the boss **244**, the dissimilar threads tend to bind and lock the adapter to the upper plate **222**. Consequently, the handle **246** can be easily reversed and de-coupled from the adapter **250**.

[**0078**] A still further method of preventing the coupling of the adapter **250** and upper plate **222**, while permitting removal of the handle **246**, is to provide a groove, raise rib, or similar expedient on the adapter that engages with a mating feature on the upper plate. For example, although not shown, the lower surface of the proximal portion **254** may include a raised radially-directed rib that mates with a groove or similar rib on the upper surface of the boss **244**. After the two parts **250**, **222** are threadingly engaged, as seen in **FIG. 13**B, the raised ribs interfere and prevent disengagement, at least to the extent of withstanding the torque applied upon removal of the handle **246** from engagement with the adapter **250**.

[**0079**] A still further configuration in accordance with the present invention is illustrated FIGS. **14**A-**14**C and **15**. In this embodiment, an adapter **280** is provided that includes a distal male threaded portion **282**, a proximal female threaded portion **284** and a generally disk-shaped flange **286** interposed therebetween. The flange **286** includes at least one distally-directed tooth or pawl **288** close to a peripheral edge. The adapter **280** is shown in **FIG. 14C** in an orientation in which it may be coupled with a holder located below, and a handle located above. In particular, the handle will couple to the female threaded portion **284**, while the male threaded portion **282** couples with a boss on the holder and causes the aforementioned inward movement of the associated valve commissures.

[**0080**] **FIG. 15** is a partial cutaway that shows engagement of the pawl **288** with an upstanding feature on the valve holder **290**, such as a cutting guide **292**. That is, rotation of the adapter **280** in the direction of arrow **294** causes the pawl **288** to cam up and over the cutting guide **292**. Because of the shape of the pawl **288**, the adapter **280** cannot be rotated in the opposite direction. Thus, the adapter **280** is maintained in its threading engagement with the holder, which maintains the aforementioned inward bias of the valve commissures, and permits removal of the handle. The positive engagement of the pawl **288** with the cutting guide **292** ensures that the adapter **280** cannot be removed from the holder once coupled thereto. The illustrated adapter **280** is representative of one type of adapter that can be used to retrofit existing valve holders. Specifically, the adapter **280** can be sold in combination with the valve holder, and be stored with the valve, or can be sold as a separate item to be coupled with handle at the time of surgery.

[**0081**] FIGS. **16**A-**16**F illustrate portions of an alternative holder of the present invention having an alternative structure for maintaining valve commissure constriction. A segment of a valve abutment portion **300** is shown interacting with a segment of an adjusting portion **302**. The abutment portion **300** and adjusting portion **302** may in other respects be identical to those illustrated in **FIGS. 4 and 5**A-**5**B. Indeed, the abutment portion **300** includes at least one upstanding leg **304** having a hook **306**, as described previously. In addition to the leg **304**, an upstanding gap retainer **308** is provided, preferably adjacent thereto. The gap retainer **308** includes a stop member **310** having a lower angled surface **312**. In preferred embodiment, there are two or more, preferably three, pairs of legs **304** and gap retainers **308**. Furthermore, although the leg **304** and gap retainer **308** are illustrated as separate elements, they may be incorporated into a single upstanding element or leg.

[**0082**] FIGS. **16**A-**16**C illustrate a process of assembling the holder by insertion of the leg **304** and gap retainer **308** through an aperture **314** provided in the adjusting portion **302**. As seen, the leg **304** and gap retainer **308** are cantilevered and spaced apart so that they may be biased toward one another and fit through the aperture **314**. Both the hook **306** and stop member **310** are axially aligned so as to normally interfere with respective sides of the aperture **314**, and the leg **304** and gap retainer **308** must be bent to permit passage through the aperture **314**.

[**0083**] FIGS. **16**D-**16**F illustrate operation of the holder. **FIGS. 16D** shows the relative positioning of the valve abutment portion **300** and adjusting portion **302** during storage and shipping of the holder and attached valve. Prior to delivery of the valve along a surgical pathway, the valve abutment portion **300** and adjusting portion **302** are separated so as to constrict the valve commissures, as was described previously. This separation is desirably accomplished using a handle with or without an adapter. As the adjusting portion **302** moves relatively away from the abutment portion **300**, depicted in FIGS. **16**E, the aperture **314** contacts the lower angled surface **312** of the stop member **310** and cams the cantilevered gap retainer **308** inward. Subsequently, the gap retainer **308** springs upright to its relaxed position, as seen in FIGS. **16**F, such that the stop member **310** again interferes with and contacts the face of the adjusting portion **302** and prevents it from moving back toward the abutment portion **300**. In this manner, a simple and reliable mechanism for maintaining separation of the holder elements provides a positive stop and insurance against inadvertent commissure expansion.

[**0084**] It will be appreciated that the invention has been described hereabove with reference to certain examples or preferred embodiments as shown in the drawings. Various additions, deletions, changes and alterations may be made to the above-described embodiments and examples without departing from the intended spirit and scope of this invention. Accordingly, it is intended that all such additions, deletions, changes and alterations be included within the scope of the following claims.

What is claimed is:

1. A holder for a tissue-type prosthetic mitral heart valve attachable to a surgical delivery handle, the heart valve having an inflow end and an outflow end and a flow axis therebetween, the valve including an annular suture ring at the inflow end and radially flexible commissure posts circumferentially-spaced around the outflow end that support occluding tissue surfaces of the valve, comprising:

a commissure post constriction mechanism releasably attached to the sewing ring at the inflow end of the valve, the mechanism adapted to constrict the valve commissure posts radially inward from a relaxed position to a constricted position when actuated by the delivery handle, and

a retaining mechanism that retains the commissure post constriction mechanism in the constricted position after the delivery handle is removed.

2. The holder of claim 1 wherein the commissure post constriction mechanism comprises:

a valve abutment portion sized and shaped to abut the inflow end of the valve;

an adjusting portion coupled to the abutment portion opposite the valve and able to move with respect to the abutment portion; and

one or more filaments attached to the adjusting portion and coupled to the commissure posts that constrict the commissure posts radially inwardly upon movement of the adjusting portion with respect to the abutment portion.

3. The holder of claim 2 wherein the commissure post constriction mechanism further comprises:

an adjusting member coupled to the adjusting portion and adapted to move the adjusting portion with respect to the abutment portion.

4. The holder of claim 3 wherein the adjusting member is externally threaded, the adjusting portion including a threaded aperture for receiving the external threads of the adjusting member and being open to the abutment portion, such that upon advancement into the threaded aperture the threaded adjusting member contacts the abutment portion and forces the adjusting portion away from the abutment portion.

5. The holder of claim 4 wherein the valve abutment portion has a generally planar shape, and the adjusting portion has a substantially complementary planar shape to the valve abutment portion with the threaded aperture extending through an upstanding boss in the center thereof.

6. The holder of claim 4 wherein the adjusting member has a central longitudinal threaded bore sized to receive the threaded end of the handle.

7. The holder of claim 6 wherein the adjusting member and the threaded aperture in the adjusting portion cooperate to form the retaining mechanism wherein the frictional resistance to rotation therebetween is greater than the frictional resistance to rotation between the threaded end of the handle and the threaded bore of the adjusting member.

8. The holder of claim 7 wherein the adjusting member and the threaded aperture in the adjusting portion are each made of a polymer, and the threaded end of the handle is metal.

9. The holder of claim 4 wherein the adjusting member and the adjusting portion include interfering structures that engage upon advancement of the adjusting member into the threaded aperture of the adjusting portion to prevent reversal of the adjusting member therefrom.

10. The holder of claim 2 wherein the commissure post constriction comprises a ratchet assembly that maintains a space between the valve abutment portion and the adjusting portion and holds the commissure posts in the constricted position after the handle is detached.

11. The holder of claim 10 wherein the ratchet assembly comprises one or more ratchet members affixed to the valve abutment portion that each engage a complementary opening in the adjusting portion.

12. The holder of claim 2 wherein the commissure post constriction comprises an upstanding leg on the valve abutment portion that maintains a space between the valve abutment portion and the adjusting portion and holds the commissure posts in the constricted position after the handle is detached.

13. A method for retrofitting a holder for a tissue-type prosthetic mitral heart valve attachable to a surgical delivery handle, the heart valve having an inflow end and an outflow end and a flow axis therebetween, the valve including an annular suture ring at the inflow end and radially flexible commissure posts circumferentially-spaced around the outflow end that support occluding tissue surfaces of the valve, the holder having a commissure post constriction mechanism releasably attached to the sewing ring at the inflow end of the valve, the mechanism adapted to constrict the valve commissure posts radially inward from a relaxed position to a constricted position when actuated by the delivery handle, the method including:

providing a retaining mechanism that retains the commissure post constriction mechanism in the constricted position after the delivery handle is removed.

14. The method of claim 13 wherein the step of providing includes providing the retaining mechanism during the holder assembly process so that the retaining mechanism is attached to and shipped as a unit with the prosthetic valve.

15. The method of claim 13 wherein the step of providing includes providing the retaining mechanism separately from the holder and valve combination and the method includes coupling the retaining mechanism to the holder at the time of surgical implantation of the valve.

16. The method of claim 15 including packaging and selling the retaining mechanism and delivery handle as a unit.

17. The method of claim 13 wherein the retaining mechanism comprises an adapter that is interposed between and threadingly engaged to the holder and the handle.

18. A kit of storage and handling clips and heart valve holders for different diameter tissue-type prosthetic mitral heart valves, the heart valves each having an inflow end and an outflow end and a flow axis therebetween, each valve including an annular suture ring at the inflow end and radially flexible commissure posts circumferentially-spaced around the outflow end that support occluding tissue surfaces of the valve, the kit comprising:

a set of holders each adapted to attach to the sewing ring at the inflow end of a valve and having a generally planar portion including a plurality of tangs radiating from a central body to cover a portion of the suture ring,

the tangs being radially dimensioned to correspond to the diameter of the sewing ring; and each holder including a plurality of peripheral notches in the planar portion; and

a plurality of identical storage and handling clips each having a plurality of fingers for engaging the peripheral notches in any one of the holders.

19. The kit of claim 18, wherein the planar portion of each holder is generally triangular in shape with the tangs at the apices, and a peripheral notch located adjacent each tang.

20. The kit of claim 18, wherein each clip comprises a disk portion and a handle pivotally attached to one side thereof, with the fingers extending generally axially from the other side thereof.

21. The kit of claim 20, wherein there are three fingers in each clip evenly disposed about the axis of the disk portion.

22. A method for replacing a heart valve, comprising the steps of:

providing a prosthetic tissue-type heart valve having an inflow end and an outflow end and a flow axis therebetween and including a suture ring affixed to a stent having commissure posts circumferentially-spaced about the flow axis for supporting occluding surfaces of the valve, the commissure posts being cantilevered generally in the outflow direction;

affixing a holder to the inflow end of the valve;

attaching a handle to the holder and simultaneously constricting the commissure posts of the valve;

inserting the valve to the target annulus of the native heart valve using the handle;

removing the handle while maintaining the commissure posts constricted;

securing the valve to the annulus; and

detaching the holder from the valve.

23. The method of claim 22, wherein the holder comprises:

a valve abutment portion sized and shaped to abut the inflow end of the valve;

an adjusting portion coupled to the abutment portion opposite the valve and able to move with respect to the abutment portion; and

one or more filaments attached to the adjusting portion and coupled to the commissure posts that constrict the commissure posts radially inwardly upon movement of the adjusting portion with respect to the abutment portion,

the method including moving the adjusting portion away from the abutment portion when attaching the handle to the holder so that the filaments are pulled by the adjusting portion to cause the commissure posts to constrict radially inward.

24. The method of claim 23 wherein the holder further includes an adjusting member coupled to both the abutment portion and the adjusting portion and adapted to transfer movement of the handle to cause the adjusting portion to move with respect to the abutment portion.

25. The method of claim 24, wherein the handle includes threads that engage complementary threads on the adjusting member, and the adjusting member includes threads that engage complementary threads on the adjusting portion, wherein the frictional resistance to rotation between the adjusting member and adjusting portion is greater than the frictional resistance to rotation between the handle and the adjusting member, the method including:

fully seating the handle into the adjustment member and advancing the handle and adjustment member further to cause the adjusting portion to move with respect to the abutment portion; and

reversing rotation of the handle to decouple the handle from the adjustment member without reversing the adjustment member from engagement with the adjusting portion.

26. The method of claim 23 wherein the abutment portion includes a ratchet member that engages a complementary opening in the adjusting portion to retain the valve in the constricted position after the handle is removed, the method including ratcheting the valve abutment portion and the adjusting portion apart.

27. The method of claim 23 wherein the abutment portion includes an upstanding leg having a hook that couples the valve abutment portion and the adjusting portion together and a stop member that maintains a space between the valve abutment portion and the adjusting portion to hold the commissure posts in the constricted position after the handle is removed, the method including displacing the valve abutment portion and the adjusting portion apart until the stop member engages the adjusting portion.

* * * * *